Technical data
MTL process alarm equipment

September 2016
INM RTK725 range rev 30

CROUSE-HINDS
SERIES

MTL RTK725 range

Alarm Annunciator

EATON
Powering Business Worldwide

Safety Instructions

The following methods are used in this manual to alert the user to important information:-

	WARNING! Warnings are provided for safety and **MUST** be followed

CAUTION Cautions are provided to prevent damage to the instrument.

NOTE These are used to give general information to ensure correct operation.

Declaration of Conformity

A printed version of the Declaration of Conformity has been provided separately within the original shipment of goods. However, you can find a copy of the latest version at http://www.mtl-inst.com/certificates

The copyright in this work is vested in Eaton and this document is issued for the purpose only for which it is supplied. No licence is implied for the use of any patented feature. It must not be reproduced in whole or in part, or used for tendering or manufacturing purposes except under an agreement or with the consent in writing of Eaton and then only on the condition that this notice is included in any such reproduction. Information furnished is believed to be accurate but no liability in respect of any use of it is accepted by Eaton.

CONTENTS

Safety Instructions **2**

Declaration of Conformity **2**

1. Introduction **7**

1.1 Installation **8**

Unpacking *8*

Basic principles of handling *8*

2. Front View Examples **9**

System Front View *10*

3. System Description & Features **11**

3.1 General *11*

3.2 Window Colours *12*

3.3 Laser Printed Legends *14*

3.4 Adding Or Changing Film Legends *14*

3.5 Lamp Or LED Illumination *15*

3.7 Alarm Card Types *16*

3.8 Pushbutton / Programming Module *16*

3.9 Pushbutton / Programming Module Options *17*

3.10 Fully Field Programmable *17*

3.11 Expandability Using SI/O Cards *17*

3.12 Sleep Mode *17*

3.13 Automatic Mute Or Automatic Acknowledge *18*

3.14 Integral Audible Alarm *19*

3.14a Horn adjustment on Remote Pushbutton / Programming Modules *20*

3.15 Remote Pushbutton Inputs *22*

3.16 Terminations *22*

3.17 Failsafe Mode *22*

4. Inputs **23**

4.1 Optically Coupled Inputs *23*

4.2 Standard Input Configuration *23*

4.3 Signal Supply Voltage *23*

4.4 Input Voltage Options *24*

*4.5 Input Time Delay – Option AD** *24*

4.6 Input Wiring Segregation *24*

4.7 No Master Module *24*

5. Outputs **25**

5.1 Common Outputs *25*

5.2 Critical Horn Relay - HNA *26*

5.3 Non-Critical Horn Relay - HNB *26*

5.4 Critical Group Relay - GPA *27*

5.5 Critical Group Relay - GPB *27*

5.6 Reflash Critical Group Relay - GPA *27*

5.7 Reflash Non-Critical Group Relay - GPB *27*

5.8 Common Relay Function Codes *27*

5.9 Multi-Function Relay Operating Modes *27*

6. Technical Specifications **28**

6.1 General *29*

6.2 Fuse Details - SPR Module *29*

6.3 Fuse Details - S/O Module *29*

6.4 Suitable Power Supplies *29*
6.5 P725 Annunciator Standard Versions *29*
6.6 P725 Annunciator Fitted With The Repeat Relays Per Channel Option *30*

7. Mechanical Details 31
7.1 P725 Overall And Cut Out Dimensions (Pre June 2013) *31*
7.1.1 P725 Overall And Cut Out Dimensions (After June 2013) *32*
7.2 System Capacity *33*
7.3 Panel Mounting Clamps *33*

8. Alarm Sequences 34
8.1 Summary *34*
8.2 Audible Alarm Grouping *34*
8.3 Ringback Audible *34*

9. Additional Features 35
9.1 Automatic Reset *35*
9.2 Non-Latch Sequence (No Lock-In) *35*
9.3 Reflash Feature *35*
9.4 Ringback Sequence *35*
9.5 Two Pushbutton Operation *35*
9.6 First-Up Sequences *35*

10. Sequence Configuration and Tables 36
10.1 ISA-Sequence M *36*
10.2 ISA-Sequence A *37*
10.3 ISA-A-4 Sequence *38*
10.4 ISA-R Sequence - *39*
10.6 ISA-F2M-1 Sequence *42*
10.7 ISA-F3A Sequence - *44*

11. Options 46
11.1 General *46*
11.2 LED Assemblies (Option LED) *46*
11.3 Tropicalisation (Option TRO) *46*
11.4 Individual Channel Repeat Relays (Option RLY) *46*
11.5 Individual Channel Dual Repeat Relays (Option RL2) *47*
*11.6 Customer Specified Response Time (Option CRT**)* *47*
11.7 Adjustable Response Time (Option AD)* *47*
11.8 Disable Integral Horn (Option DHN) *48*
11.9 Higher Field Contact Voltages (Option FCxx) *48*
11.10 Supply Input / Output Module (Option SI/O) *48*
11.11 RS485 Serial Communications (Option COM) Part No. CB4468POP1 ..... *48*
11.12 Individual Channel Repeat Relays Powered By The Field Contact Voltage (Option RAV) *48*
11.13 Three Horn Relay Outputs (Option 3HN) *48*
11.14 Three Group Relay Outputs (Option 3GP) *48*
11.15 Repeat Pushbutton Output (Option RPB) *49*
11.16 Group Relays Follow Inputs (Option GFI) *49*
11.17 Additional Group Relay Contact (Options 2GA or 2GB) *49*
11.18 Total Group Relay (Option RTG) *49*
11.19 SPR Module (Supply-Pushbuttons-Relay Module) *49*
11.20 Logic Power Connections *49*
11.21 Signal Supply Voltage Connections *49*
11.22 Common Horn/Group/Multi-Function Relay & Remote P.B. Connections *50*

12. Large Window Alarm Module Wiring 51
12.1 Standard Unit Without Repeat Relay Facility *51*

12.2 Optional Unit With Repeat Relay Facility 51
12.3 Large Window Versions Fitted With An Odd Number Of Alarms..... 52
12.4 Standard Unit Without Repeat Relay Facility 52
12.5 Optional Unit With Repeat Relay Facility 52

13. Medium Window Alarm Module Wiring 53
13.1 Standard Version Without Repeat Relay Facility..... 53
13.2 Optional Version With Repeat Relay Facility..... 53

14. Small Window Alarm Module Wiring 54
14.1 Standard Version Without Repeat Relay Facility..... 54
14.2 Optional Version With Repeat Relay Facility..... 54

15. Dual Repeat Relay Option..... 55
15.1 Optional Version With Dual Repeat Relay Facility (Option RL2) 55

16. Signal Supply Voltage Options 56
16.1 Standard Systems With Combined Logic And Signal Supply..... 56
16.2 Standard Systems Using Externally Powered Inputs 57
16.3 Higher Voltage Direct Powered Inputs 57

17. Common Pushbutton Module 58
17.1 P725 Systems Sharing A Common Pushbutton / Programme Module..... 58
17.2 SI/O Module Details..... 59
17.3 P725 Systems With Remote Pushbutton/Programming Module 60
17.4 Options For Mounting The Remote Version Of The Pushbutton Module 60
17.5 Panel Mounting Version..... 60
17.6 DIN-Rail Mounting Version 60
17.7 Wall Mounting Version..... 60
17.8 Remote Pushbutton Module Connections..... 61
17.9 Repeat Pushbutton Outputs (Option RPB)..... 62

18. Power Distribution..... 63
Power Distribution On Large Annunciator Units..... 63

19. Systems Fitted With Serial Communications 64
19.1 Connections..... 64

20. System Configurations and Programming 65
20.1 Programming Mode 65
20.2 Changing A Function Setting 65
20.3 Programming Example 67
20.4 Checking Programmed Settings 67
20.5 Systems With Unarmed Ways 67
20.6 Points To Note When Programming 67

21. Function No Key And Descriptions 68

22. Function Descriptions..... 69

23. Alarm Card Address Settings..... 75
23.1 Set Output Drive To Operate With Lamps or LED..... 75
23.2 Alarm Card DIL Switch SW1 Address Settings 76

24. Customer Adjustable Response Times..... 80

25. Systems with Serial Communication 85

26. Serial Communication Card 87

28. Systems Linked To 3rd Party Devices 94

29. P725 To P725 Serial Links 95

30. Commissioning 97

31. Maintenance 98

31.1 No Special Tools 98
31.2 Removing Filter Assemblies 98
31.3 Changing Film Legend 98
31.4 Changing Bulbs/LED Assemblies 98
31.5 Fuse Replacement 98
31.6 Position Of Fuses On The Supply Card 99

32. Spare Parts Description 99

33. Other MTL process alarm products 102

35. Function Setting per Alarm Sequence 103

1. Introduction

The MTL RTK725 range of alarm annunciator is used to provide visual and audible warning that a process has gone beyond set limits or to provide status only indication. The annunciator is manufactured from universal cells, each 60 x 60mm, which can be assembled in an array to provide the number of rows and columns required to suit individual panel designs.

Each cell within the annunciator is able to contain either:- one large, two medium or four small alarm windows, which can be illuminated by conventional 28V filament lamps or by “fit and forget” LED assemblies.

The assembled unit is fully field programmable which allows the user to enable a number of pre-defined features to control the operation of the annunciator with regards to alarm sequence, horn groups, common alarm groups or optional Modbus communications.

Selection of features is on a per channel basis with no special tools or programming knowledge required. All programming is carried out from the front of the unit using the integral pushbutton / programming module, which allows changes to be easily made during commissioning or at a later date after the equipment has been installed.

Large and medium window version alarm cards are fully interchangeable within the annunciator, on small window versions an additional card type is used for the 2nd pair of alarm channels but cards of the same type remain fully interchangeable.

Reliability of operation is increased over conventional annunciators as each alarm card is fitted with its own application specific integrated circuit (ASIC), which is capable of complete system control. During initial power up one of the alarm cards will automatically act as a master controller with regards to flash rates etc and in the event that this card fails or is removed another card will automatically take over the role of master controller.

The standard unit is supplied with five integrally mounted common output relays, which are used to provide 2 horn relay outputs, 2 group relay outputs and a multifunction relay output with programmable function.

Additional options exist for more complex requirements including integrally mounted signal duplicating relays on a per channel basis, bi-directional RS485 serial communications link and user selectable time delays on each channel.

Accessibility for normal maintenance, lamp/LED changes, legend/filter changes and programming is accomplished from the front of the panel without the use of special tools.

1.1 Installation

Unpacking

Once the item has been unpacked please visually examine the unit for any signs of transit damage before installing the unit into the control system. If any damage has occurred please report the damage to the freight forwarder and copy Eaton. The alarm annunciator is supplied with panel mounting clamps locked in place, however please check all packages to ensure that no additional pieces are left in the box as any auxillary items like power supplies, horns, pushbuttons or spares kits will be packed separately.

Please double check that all items listed on the packing list have been unpacked before disposing of any packing material.

Basic principles of handling

There are some basic principles that everyone should observe prior to carrying / lifting a large annunciator:

- Ensure that the object is light enough to lift, is stable and unlikely to shift or move.
- If the object is two heavy or awkward for one person to safely lift ask for help or use a handling aid.
- Make sure the route is clear of obstructions.
- Make sure there is somewhere to put the load down wherever it is to be moved to.
- Stand as close to the load as possible, and spread your feet to shoulder width.
- Bend your knees and try and keep the back's natural, upright posture.
- Grasp the load firmly as close to the body as you can.
- Use the legs to lift the load in a smooth motion as this offers more leverage reducing the strain on your back.
- Carry the load close to the body with the elbows tucked into the body.
- Avoid twisting the body as much as possible by turning your feet to position yourself with the load.

	WARNING! Installation, configuration and maintenance of this annunciator must only be performed by competent service personnel

2. Front View Examples

Systems supplied prior to June 2013

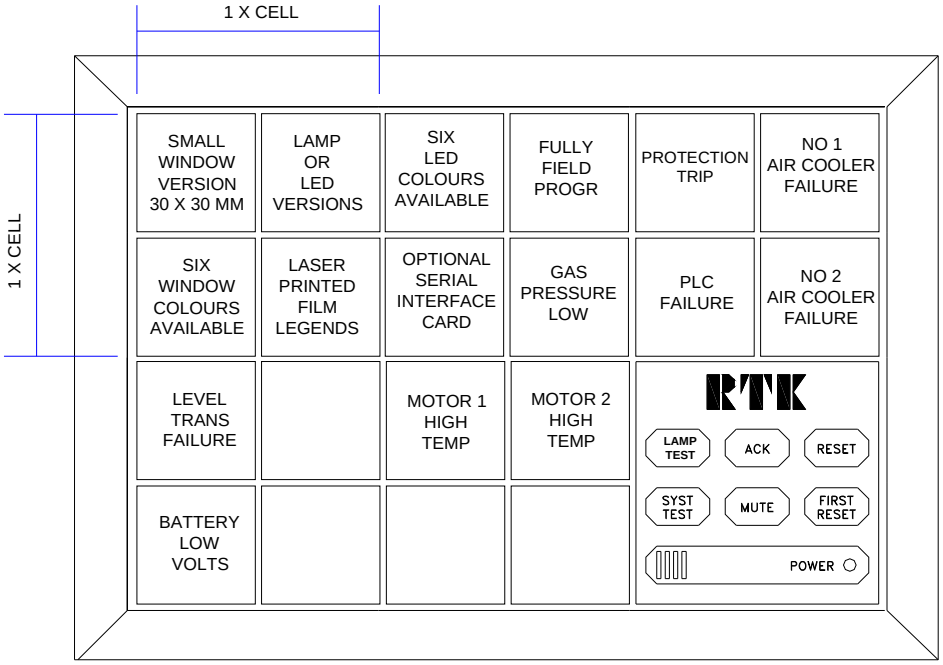

Small Window Version

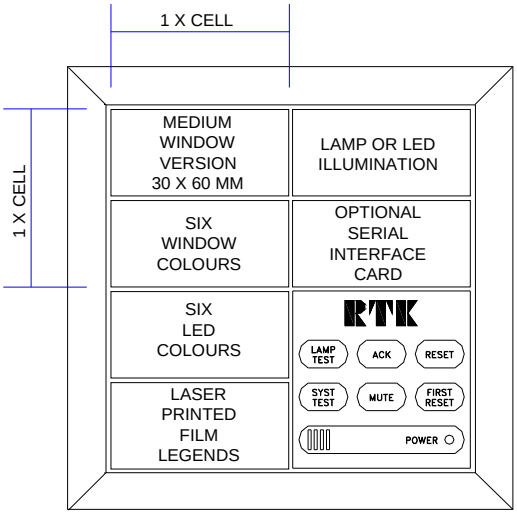

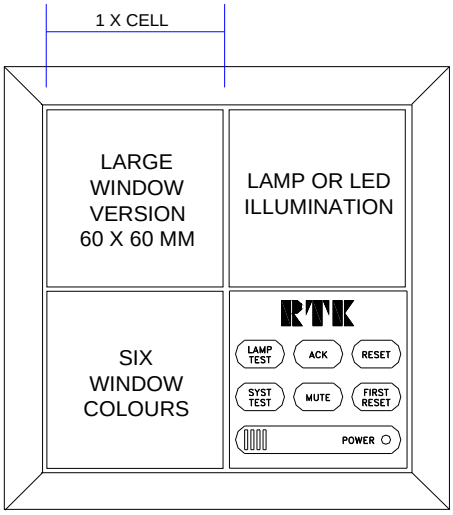

Medium Window Version ***Large Window Version***

System Front View

Systems supplied after June 2013

On systems supplied after June 2103 we revised the framing of the annunciator as typically shown below

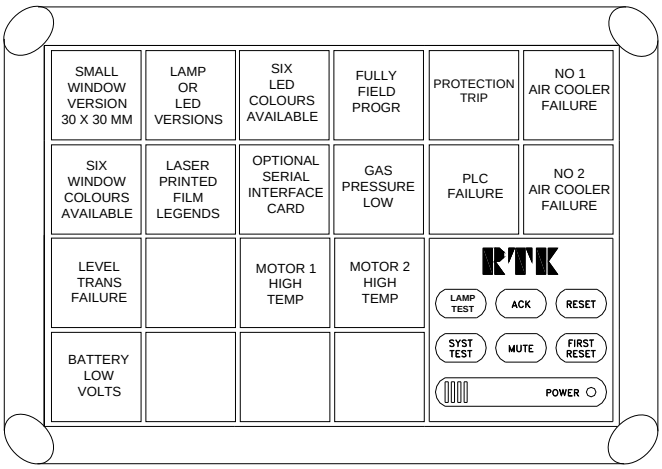

Typical Small Window Version

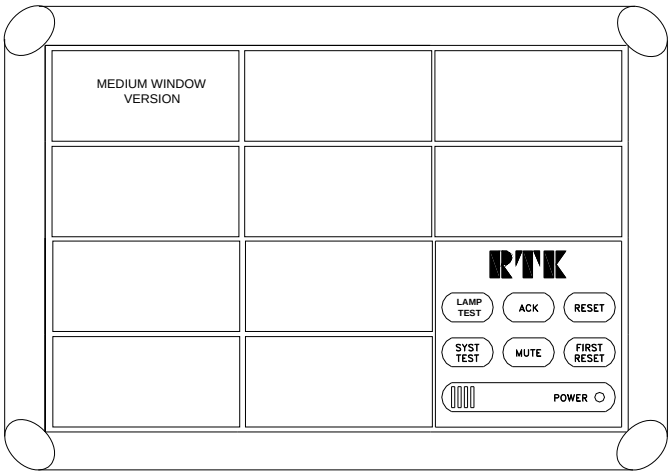

Typical Medium Window Version

3. System Description & Features

3.1 General

Annunciators are manufactured to meet individual customer's requirements using separate "cells" which can be assembled in configurations from 1 to 16 cells high and 1 to 16 cells wide as required. The finished array is “picture framed” using standard lengths of aluminium extrusion. Individual alarm channels can be displayed in one of three sizes as shown below

Large, Medium & Small Window Sizes

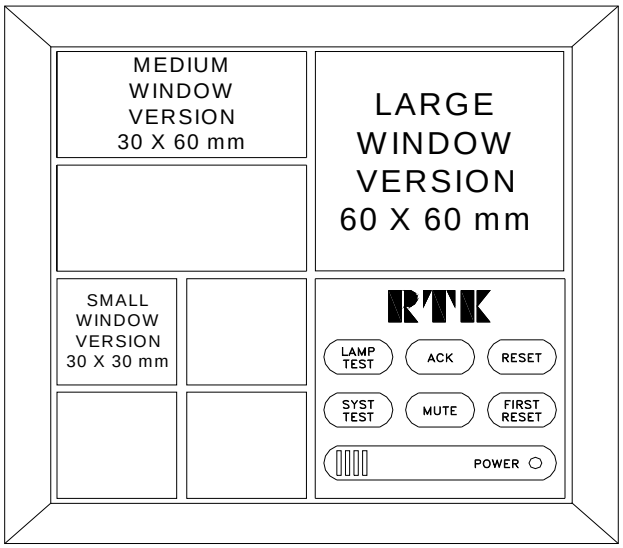

3.2 Window Colours

Systems supplied before June 2013

Each channel is equipped with its own removable bezel, which contains a clear lens, white diffuser, coloured filter and a laser printed film legend.

Part	***Small Window***	***Medium Window***	***Large Window***
Bezel	ID-SLC-3WF-B	ID-SLC-3WH-B	ID-SLC-3WG-B
Clear Lens	ID-SLC-3LF	ID-SLC-3LH	ID-SLC-3LG
White Diffuser	ID-SLC-3PF-WH	ID-SLC-3PH-WH	ID-SLC- 3PG-WH
Clear filter (used with white windows)	ID-SLC-3PF-C	ID-SLC-3PH-C	ID-SLC- 3PG-C
Red filter	ID-SLC-3PF-R	ID-SLC-3PH-R	ID-SLC- 3PG-R
Amber filter	ID-SLC-3PF-A	ID-SLC-3PH-A	ID-SLC- 3PG-A
Yellow filter	ID-SLC-3PF-Y	ID-SLC-3PH-Y	ID-SLC- 3PG-Y
Blue filter	ID-SLC-3PF-B	ID-SLC-3PH-B	ID-SLC- 3PG-B
Green filter	ID-SLC-3PF-GD	ID-SLC-3PH-GD	ID-SLC- 3PG-GD

Systems supplied after June 2013

In June 2013 we simplified the Bezel assembly and removed the need for a diffuser.

Each channel is equipped with its own removable bezel, which contains a clear lens, coloured filter and a laser printed film legend.

The following part numbers refer to systems supplied after June 2013

Part	Small Window	Medium Window	Large Window
Bezel	ML-7227-S	ML-7227-M	ML-7227-L
Clear Lens	ML-7228-S	ML-7228-M	ML-7228-L
Red filter	ML-7229-S-RD	ML-7229-M-RD	ML-7229-L-RD
Amber filter	ML-7229-S-AM	ML-7229-M-AM	ML-7229-L-AM
Yellow filter	ML-7229-S-YW	ML-7229-M-YW	ML-7229-L-YW
Blue filter	ML-7229-S-BL	ML-7229-M-BL	ML-7229-L-BL
Green filter	ML-7229-S-GN	ML-7229-M-GN	ML-7229-L-GN

3.3 Laser Printed Legends

Laser printed film legends are easily generated, from within Microsoft Excel, in a font style and size to suit individual applications. A software template is available, free of charge from Eaton, which allows the user to produce film legends locally if required. Completed film legends are located between the clear front lens of the removable window assembly and the associated coloured filter and diffuser.

3.4 Adding Or Changing Film Legends

Systems supplied before June 2013

Each lens assembly has a small slot in the upper ridge of the surround bezel, which allows a flat blade terminal screwdriver to be used to gently lever the assembly forward. Once the assembly has been removed the diffuser, coloured filter and film legend can be accessed using a flat blade screwdriver to gently lever the lens clear of the associated parts as indicated in the diagram below. This MUST be levered on the side NOT the top or bottom

	WARNING! Installation, configuration and maintenance of this annunciator must only be performed by competent service personnel

	WARNING! High voltage field contact voltages may be present. Ensure that the annunciator is powered down before working on the unit or any connected apparatus.

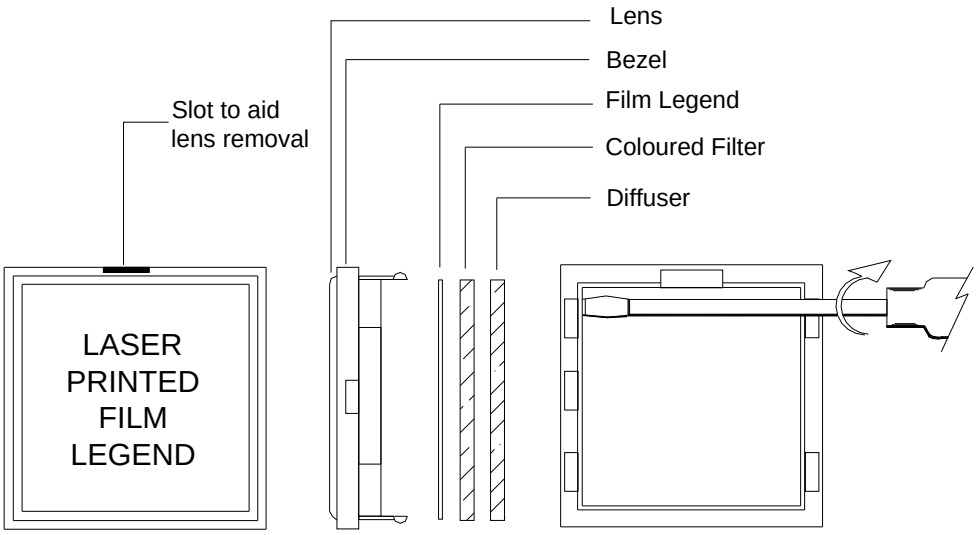

Systems supplied after June 2013

Each lens assembly has a small slot in the upper ridge of the surround bezel, which allows a flat blade terminal screwdriver to be used to gently lever the assembly from the annunciator.

Once the assembly has been removed the lens, coloured filter and film legend can be accessed by gently pushing outwards on the side of the inside face of the bezel to allow the lens to clear the associated moulding tabs.

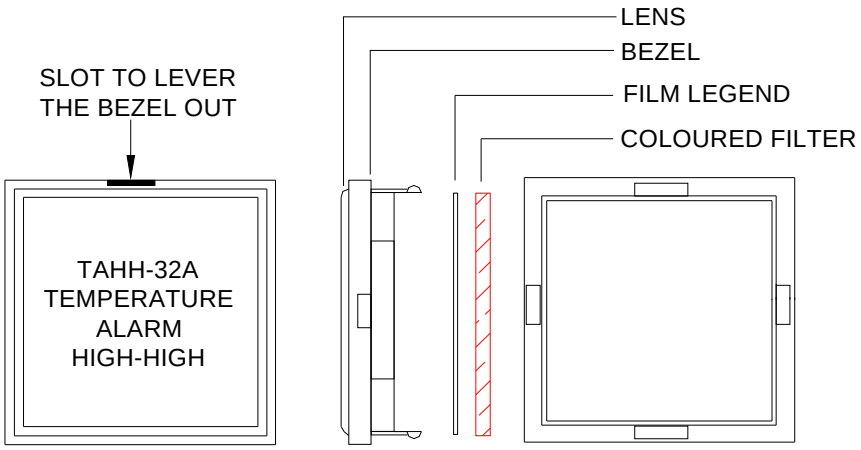

3.5 Lamp Or LED Illumination

Lamp Versions
All units are suitable for either 28V - 10 mm wedge based lamps part no. LP-28-004

LED Assemblies
We use LED assemblies as standard, which plug into the standard lamp socket, as they offer lower power consumption and offer a maintenance free solution.

We provide white LED's as standard throughout the range.

3.6 Window Numbering System

We have adopted the following window numbering system to aid with the location of the film legend and the associated alarm cards. This method is used to ensure that the legend matches the functions selected for the designated alarm.

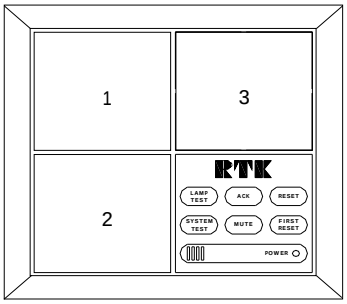

Large Window Version

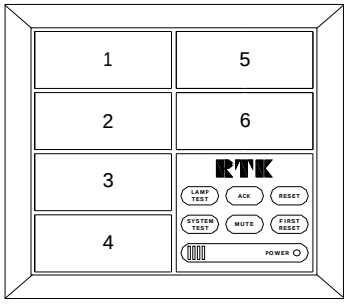

Medium Window Version

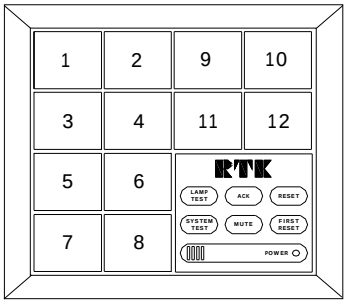

Small Window Version

3.7 Alarm Card Types

There are 4 basic types of dual channel alarm cards

PART NO	DESCRIPTION	USED ON
CB5674POP51	2 Channel alarm card (Without repeat relays)	Large, medium and small window versions Locates in the upper slot of the associated cell
CB5674POP52	2 Channel alarm card (With repeat relay facility)	Large, medium and small window versions Locates in the upper slot of the associated cell
CB5674POP53	2 Channel alarm card (Without repeat relays)	Small window versions Locates in the lower slot of the associated cell
CB5674POP54	2 Channel alarm card (With repeat relay facility)	Small window versions Locates in the lower slot of the associated cell

Card types are supplied suitable for operation from one of the following signal supply voltages 24V, 48V or 125V. These voltages are shown on the individual alarm card and X is used to indicate which version has been supplied. Alarm cards are plugged into the rear of the annunciator and once inserted automatically connect to a pre-tested passive display motherboard.

3.8 Pushbutton / Programming Module

The pushbutton/programming module is located in the bottom right hand corner of the annunciator when viewed from the front unless otherwise specified. It has a power-on LED, integral audible and six pushbuttons to cover all of the possible sequence combinations. The six pushbutton are:- Lamp Test, Functional Test, Mute, Acknowledge, Reset and First Reset

3.9 Pushbutton / Programming Module Options

The pushbutton/programming module is normally integrally mounted within the annunciator however if required it can be supplied as a standalone item suitable for panel mounting, DIN-rail mounting or wall mounting.

3.10 Fully Field Programmable

In addition to controlling the alarm sequence the pushbutton module is also used as a configuration tool to programme the required features on the annunciator. To access the programming functions the pushbutton fascia must be hinged down to reveal a configuration switch (labelled CONF) located on the inner face of the assembly. Once the unit is in the CONF mode the user is able to enable or disable a range of pre-defined features and options. The dual function pushbutton assembly allows the user to enable any of the 25 embedded features on a per channel basis without having to remove the power to the annunciator or to remove light-boxes, back-planes or alarm cards.

All programmed information is stored in EEPROM, with a minimum 20-year retention, giving repeatability and reliability without the need for battery backup.

Note:- Alarm sequences will operate in accordance with any of the standard sequences defined in the ISA publication "Alarm Sequences and Specifications S18.2 - 1979 (R1985)"

3.11 Expandability Using SI/O Cards

System expansion cards type SI/O are used in applications where either a single pushbutton / programming module is linked to a number of alarm annunciators or when large cabinets require additional power distribution terminals to evenly distribute the logic power. In addition to the logic power terminals the SI/O card is also equipped with IN and OUT ribbon cable sockets to allow ribbon cable and connectors to be used to link common control functions between annunciators.

3.12 Sleep Mode

Sleep mode is typically used in sub station applications where the visual and audible outputs are disabled during unmanned periods to reduce the drain on the associated station batteries.
Whilst in sleep mode the logic of the annunciator will continue to react in the normal way including the operation of common alarm relays, watchdog relay and optional signal duplicating relays, only the drive signals to the lamp and audible drives are disabled.

Before sleep mode can be enabled a jumper link must be pre-set on the SPR card located inside the pushbutton / programming cell. To gain access to the SPR card first remove the back-plate on the SPR module and then remove the associated circuit card assembly using a flat blade screw driver to gently lever the assembly out using the white nylon pillar. Once the card has been removed locate the 3 pin header marked FR and SP which is located on the lower of the two cards and check that the 2 way shorting bar is in the SP position as shown below. Once the jumper has been placed into the correct position and the card assembly placed back into the annunciator the unit can be set to sleep mode using a remote mounting normally open maintained switch with one side of the switch connected to +V (+24VDC) and the other side of the switch connected to terminal FR located on the rear of the pushbutton / programming cell. Whilst the switch is maintained in the closed position the unit will remain in sleep mode.

Note: - All normal pushbutton functions are inhibited during sleep mode to ensure that the operator can view any alarms that occur as soon as the unit is returned to its normal operational state.

Sleep Mode Jumper Location

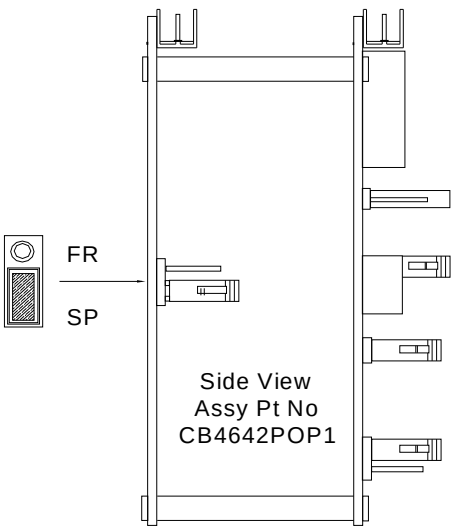

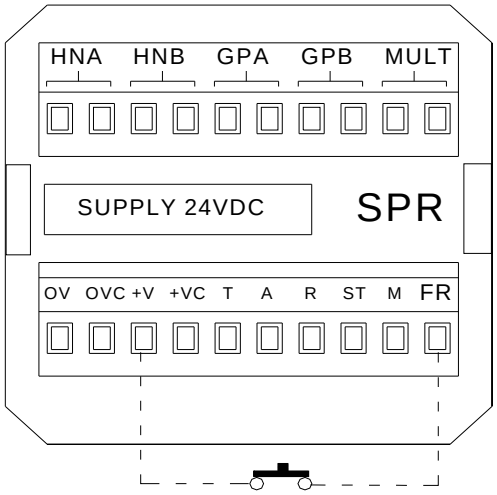

Sleep Mode Switch

	WARNING! Remove **ALL** power from the unit and fully remove the card before changing any jumpers or switches

3.13 Automatic Mute Or Automatic Acknowledge

Each annunciator is equipped with an integral timer that can be enabled to allow the user to automatically mute or acknowledge alarms after a pre-set time delay. To set the automatic mute or acknowledge feature the pushbutton / programming module must be hinged down by inserting a small flat blade screw driver into the recess on the upper face of the associated surround bezel and gently levering the pushbutton assembly forward to reveal the information plate which is visible on the inside face of the module. The two pozidrive screws and washers in the centre of the plate should be removed to allow access to DIL switch SW7, which is used to set the unit to automatically silence or acknowledge and to set the required time delay.

	WARNING! Remove **ALL** power from the unit and fully remove the card before changing any jumpers or switches

Auto Mute / Ack Delay Switch Location (Information Plate Removed)

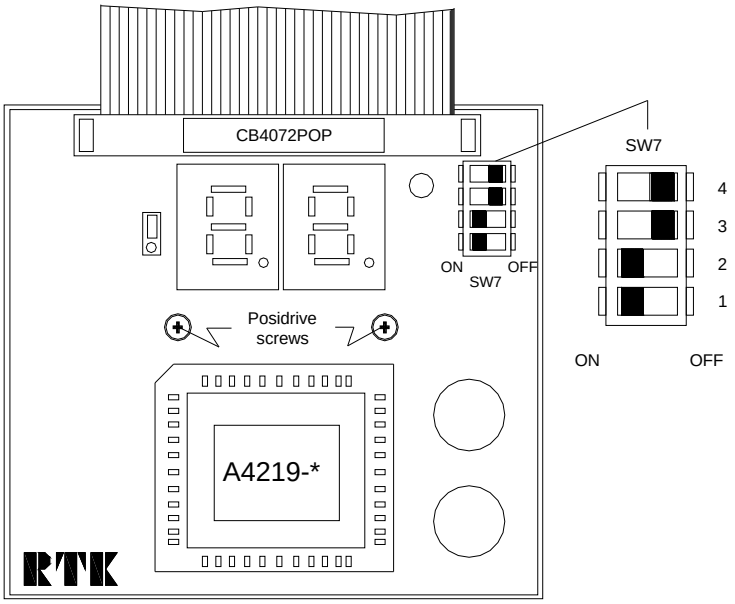

Automatic Acknowledge or Silence Time Selection

FUNCTION	SW7-1	SW7-2	SW7-3	SW7-4
Automatic acknowledge	ON			UNUSED
Automatic mute	OFF			
Disable automatic timer		OFF	OFF	
Enable 1 minute time delay		ON	OFF	
Enable 4 minute time delay		OFF	ON	
Enable 8 minute time delay		ON	ON	

3.14 Integral Audible Alarm

Each annunciator is equipped with an internal 3.5kHz 95dB(A) audible located behind the integral pushbutton module. The audible is supplied with an adjustable volume control using a single turn potentiometer. The potentiometer can be accessed by hinging down the integral pushbutton module using a small flat blade screwdriver in the slot of the surround bezel. The potentiometer is located in the top right hand corner of the cell as shown below. On systems with channels configured to activate either the urgent or non-urgent audible relays it is important to note that the internal audible will only operate on channels set to operate the critical audible relay HNA (see Function F23).

Integral Horn Volume Adjustment Location

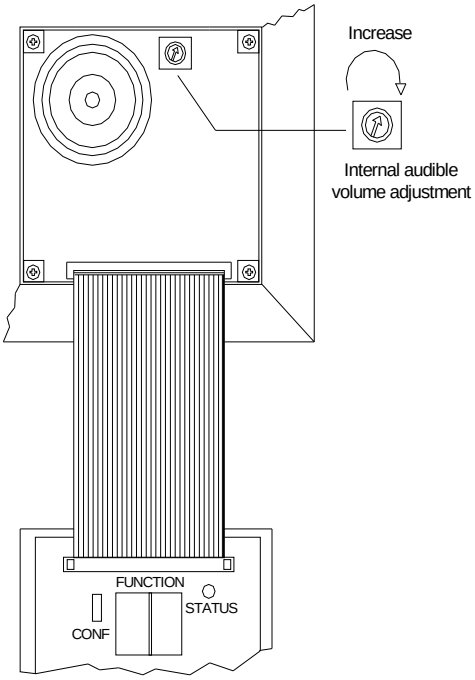

3.14a Horn adjustment on Remote Pushbutton / Programming Modules

On P725 Systems supplied with Remote Pushbutton / Programme Modules the horn adjustment potentiometer is located in an alternative position to that shown above. The potentiometer can only be accessed from the rear of the Pushbutton cell using the following procedure.

1. Remove Power From the annunciator
2. Remove the two green terminal blocks which provide customer terminations on the rear of the pushbutton cell.
3. Remove the plastic protection cover on the rear of the pushbutton cell
4. The potentiometer is now accessed on the inside face of the pushbutton cell and can be adjusted as required

Once adjustment has been made the plastic cover and customer terminal blocks can be re-fitted and the power can be applied to check the volume level.

	WARNING! Remove **ALL** power from the unit and fully remove the card before changing any jumpers or switches

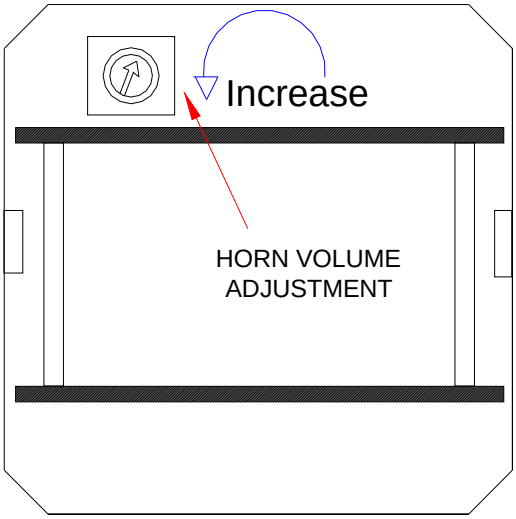

REAR VIEW OF PUSHBUTTON CELL WITH TERMINALS AND COVER REMOVED

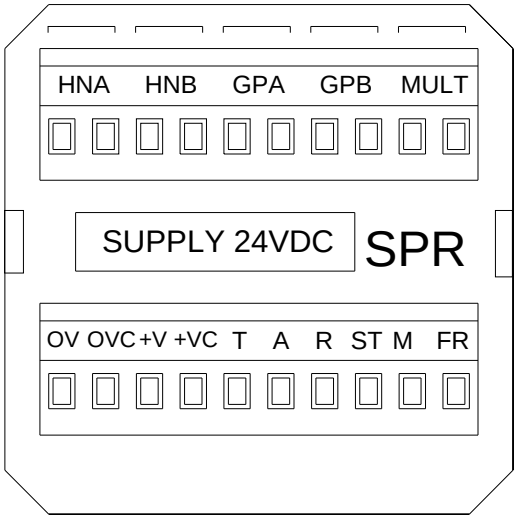

REAR VIEW OF COVER / TERMINALS

3.15 Remote Pushbutton Inputs

Remote pushbuttons can be connected to the P725 SPR module either in place of or in addition to the integral pushbuttons or to allow multiple annunciators to share common pushbuttons for example a common mute pushbutton mounted in the operator desk console. The pushbuttons should be of the normally open, momentary type and it is recommended that if long cable runs are required through electrically noisy environments a screened cable is used with the screen connected to a suitable instrument earth at one end only. Please note:- When the annunciator is in the configuration mode with the CONF switch in the ON position all integral or remote pushbutton inputs are disabled until the unit has been returned to its normal operating state.

Remote Pushbutton Wiring

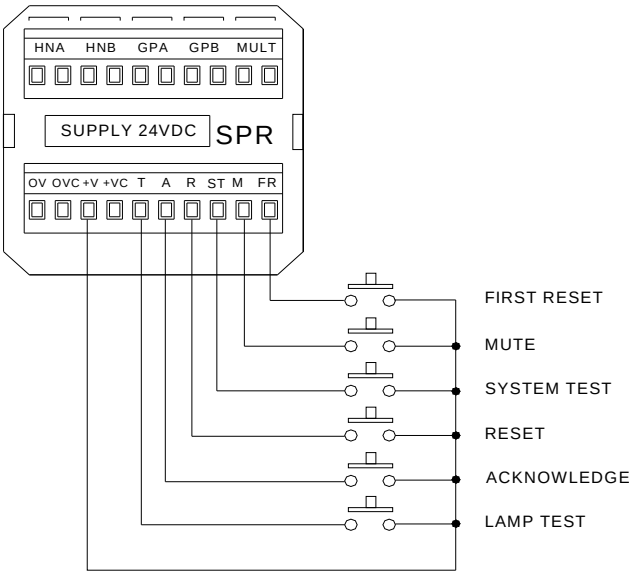

Please note:-
The common return for the remote pushbutton inputs is always +V (+24VDC) on all versions.

IMPORTANT NOTE

+VC should not be used as in some applications this terminal is used to provide the connection for High Voltage signal input power @ 48VDC, 125VDC or 120VAC.

3.16 Terminations

All active cells within the annunciator are provided with quick disconnect (2) part pluggable, rising clamp, terminals capable of accepting up to 2.5mm² cable. In the unlikely event that a card fails the associated field wiring can remain connected and the terminal temporary unplugged to allow removal and replacement of the associated card.

3.17 Failsafe Mode

All relays are configured in their default setting as energised. The relays will de-energise on trip or in the case of a power failure.

4. Inputs

4.1 Optically Coupled Inputs

All alarm inputs are provided with fully isolated inputs using optical couplers and a transient filter is built into the input circuitry so that low voltage interference will be ignored.

4.2 Standard Input Configuration

The standard 725 range of annunciator can be set to operate from volt free signal contacts that are either normally open or normally closed.

- Setting function F1 to the off state conditions the input to accept a normally open contact.
- Setting function F1 to the on state conditions the input to accept a normally closed contact.

Please note:- when using the Customer adjustable response time options AD on P725 Annunciator supplied after March 2009 Function F1 should always be set to "OFF" and switch SW2 should be used to set the Input to normally open or normally closed as described in Section 24 of this manual*

4.3 Signal Supply Voltage

On standard units an internally fused 24vdc signal supply (+VC), derived from the 24VDC logic supply (+V), is distributed to all of the common terminals marked "C" which are located to the right of each signal input terminal as typically shown below.

Typical Signal Supply Voltage Distribution

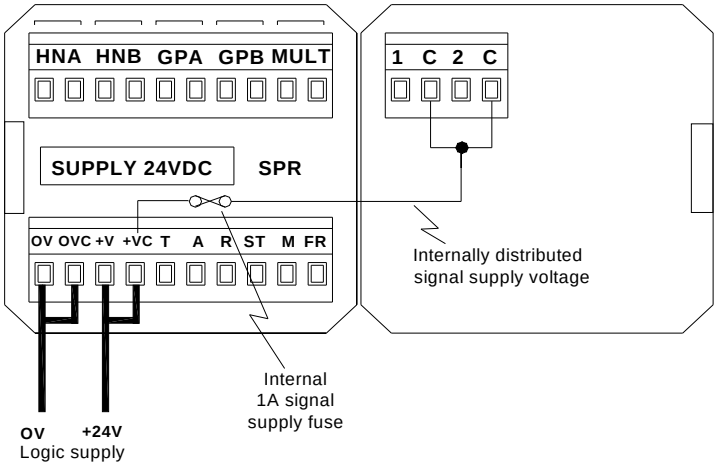

4.4 Input Voltage Options

Annunciators can be supplied suitable for connection to direct powered inputs as an option with the signal supply voltage being supplied from outside the annunciator by others. In this application the logic supply (OV and +V) and signal supply (OVC and +VC) inputs located on the SPR module are independently wired and fully isolated from each other.

OPTION CODE	VOLTAGE
Standard	24V AC/DC
FC048	48V AC/DC
FC125	125V AC/DC

4.5 Input Time Delay – Option AD*

As an option each channel can be supplied with facilities which allow the user to select a time delay to prevent the alarm from occurring unless it has been present for a pre-defined period.

Option AD1 = Adjustable Delay Range 5 – 50 ms

Option AD2 = Adjustable Delay Range 20ms - 2 seconds

Option AD3 = Adjustable Delay Range 5ms – 5 seconds

On P725 Annunciators supplied after July 2009 cards fitted with AD3 option are supplied with switches in place of the potentiometer which allows the user to select pre-defined delay times

Option AD3 = Pre-selected delay times 5mS, 10mS, 25mS, 200mS or 5 seconds

On P725 Annunciators supplied after Dec 2012 cards fitted with AD3 option are supplied with additional time ranges and a new board layout

Option AD1-3 = Pre-selected delay times 5mS, 10mS, 25mS**, 50mS**, 200mS, **2S**, 5S or **60S**

4.6 Input Wiring Segregation

Field contacts are often great distances from the annunciator it is therefore advisable to run the contact cables separately from circuits carrying heavy currents and/or high voltages to minimise the effects of induced voltages.

4.7 No Master Module

Each dual channel alarm card is equipped with a dedicated application specific integrated circuit (ASIC). System control is automatically allocated to one of the alarm cards during power on and if this card is removed, damaged or fails (apart from catastrophic failure), another card will automatically take over the common control functions. This method of operation eliminates the need for a traditional style common services/control module and removes common failure points thus increasing reliability.

5. Outputs

5.1 Common Outputs

All 725 range of annunciators are equipped with five common output relays located on the upper card of the SPR module. (Part no CB4642POP1).

As standard all five relays are factory set to be normally energised and will de-energise when activated.

Each relay is equipped with volt free contacts for customer use, which can be selected to be either normally open or normally closed in the non-alarm state per the following table.

To change any of the settings the relay card must be removed from the system as described below

1. Remove Power From the annunciator
2. Remove the two green terminal blocks which provide customer terminations on the rear of the pushbutton cell.
3. Remove the plastic protection cover on the rear of the pushbutton cell by releasing the tabs on either side of the cover
4. Remove the twin card assembly from the rear of the unit. (A flat blade screwdriver can be used to gently lever the assembly from the cell by placing the blade under the white stand-off pillars and the side of the cell).

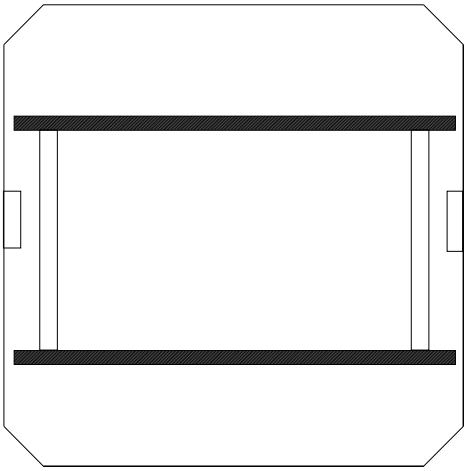

REAR VIEW OF PUSHBUTTON CELL WITH TERMINALS AND COVER REMOVED

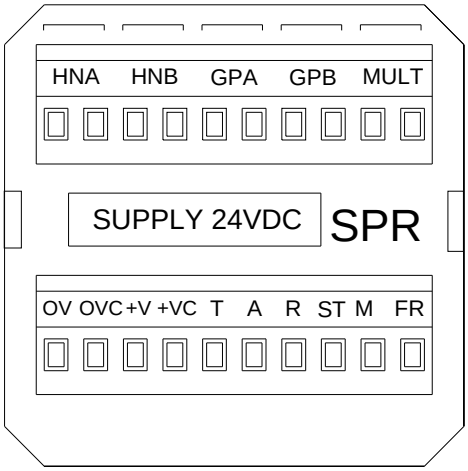

REAR VIEW OF COVER / TERMINALS

	WARNING! Remove **ALL** power from the unit and fully remove the card before changing any jumpers or switches

SPR Card Showing Relay And Jumper Locations

				CONTACT STATE	
FUNCTION	**REF.**	**RELAY**	**LINK**	**OPEN**	**CLOSED**
Critical horn relay	HNA	RL1	LK1	N/O	N/C
Non critical horn relay	HNB	RL2	LK2	N/O	N/C
Critical group relay	GPA	RL3	LK3	N/O	N/C
Non-critical group relay	GPB	RL4	LK4	N/O	N/C
Multifunctional relay	MUL	RL5	LK5	N/O	N/C

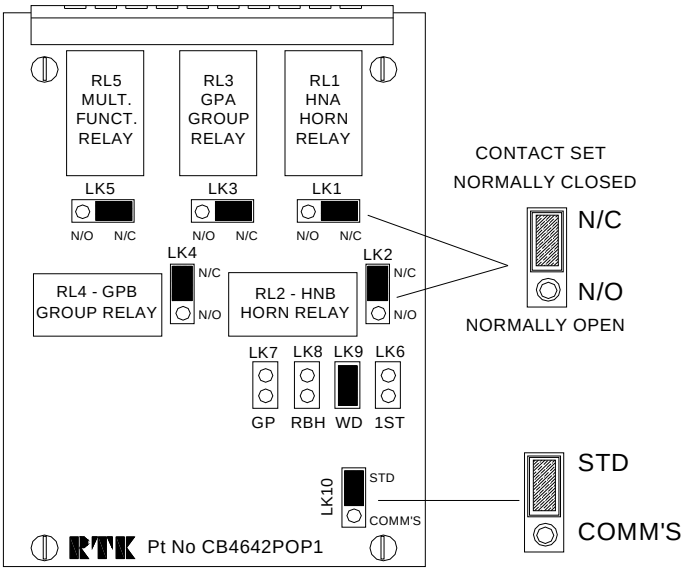

5.2 Critical Horn Relay - HNA

When an alarm occurs the horn relay will change state and remain in the alarm condition until the mute or ack pushbutton has been pressed. Each channel can be set to operate the critical horn relay as required. Please note:- Channels set to operate the critical horn relay will also operate the integral audible alarm.

5.3 Non-Critical Horn Relay - HNB

When an alarm occurs the relay will change state and remain in the alarm condition until the mute or ack pushbutton has been pressed. Each channel can be set to operate the non- critical horn relay as required. Please note:- Channels set to operate the non-critical horn relay will not operate the integral audible alarm.

5.4 Critical Group Relay - GPA

When an alarm occurs the relay will change state and remain in the alarm condition until all alarms in the group have returned to normal and the logic has been reset. Each channel can be set to operate the critical group relay as required.

5.5 Critical Group Relay - GPB

When an alarm occurs the relay will change state and remain in the alarm condition until all alarms in the group have returned to normal and the logic has been reset. Each channel can be set to operate the non-critical group relay as required.

5.6 Reflash Critical Group Relay - GPA

When an alarm occurs in the critical group the relay will change state and if reflash is set any subsequent alarm occurring in the same group will cause the relay to drop out for 0.5 seconds. Each channel can be set to reflash the critical group relay as required.

5.7 Reflash Non-Critical Group Relay - GPB

When an alarm occurs in the non-critical group the relay will change state and if reflash is set any subsequent alarm occurring in the same group will cause the relay to drop out for 0.5 seconds. Each channel can be set to reflash the non-critical group relay as required.

5.8 Common Relay Function Codes

FEATURE DESCRIPTION	FUNCTION	SETTING
Critical horn relay enable	F23	ON
Non-critical horn relay enable	F24	ON
Critical group relay enable	F21	ON
Non-critical group relay enable	F22	ON
Reflash critical group relay enable	F8	ON
Reflash non-critical group relay enable	F9	ON

5.9 Multi-Function Relay Operating Modes

The multi-function relay RL5 can be configured to act in different ways to suit particular applications by selecting one of the features detailed below and placing the shorting bar on the associated LK* jumper.

RELAY	FUNCTION	LINK
RL5	RTG = Summary group relay (Common relay which acts as a summary relay of the GPA & GPB relays)	LK7
	RB = Ringback horn relay	LK8
	FU = First up relay	LK6
	WD = Power On – Watchdog relay	LK9

When the shorting bar is set to LK7 the MUL relay will act as a summary group relay, therefore any alarm in the system set to operate either the group A or group B common alarm relay will also operate the summary group relay

6. Technical Specifications

FEATURES	DETAILS			
Input type	Each channel can be set to operate from either a normally open or normally closed contact as required			
Standard version Signal voltage	24VAC/DC	9V to 33V		
Optional versions Direct voltage inputs	48VAC/DC	19 to 70V		
	110VAC/DC	72 to 135V		
Contact resistance	Normally Closed 20k Ohm maximum series resistance			
	Normally Open 50k Ohm minimum parallel resistance			
Contact current	Typically 3mA			
Response time	Typically 25ms (alternatives available on request)			
First up	5ms Discrimination			
Input protection	Reverse polarity of the input supply Application of a 1000V megger tester between input and earth			
Input Delay	Options exist for fixed or adjustable input time delays. Adjustable delays AD1-3 = Switch Selectable 5ms, 10mS, 25mS, 50mS, 200mS, 5S or 60S			
Internal audible	3.5 kHz @ 95db(A) At 1 Metre distance complete with volume adjustment (Functions as a slave of the critical horn circuit)			
Common relays	Contacts rated 2A@24VDC, 0.4A @120VAC resistive, 0.5A @ 125VDC resistive. Maximum voltage 125VDC (125VAC)			
Individual channel Repeat relay option	Each alarm can be supplied with an individual repeat relay with a changeover contact rated 2A@24VDC, 0.4A @120VAC resistive, 0.5A @ 125VDC resistive. Maximum voltage 125VDC (125VAC).			
Communication option	The unit can be supplied with RS485 bi-directional Serial communications baud rate: 4800 or 9600 / Parity: odd or even / protocol: Modbus ASCII or RTU (user selectable)			
Window sizes (H x W)	Small 30 x 30 mm Medium 30 x 60 mm Large 60 x 60 mm			
Window colours	Red, Amber, Yellow, Green, White, or Blue			
Illumination	10 mm 50mA glass wedge filament lamps (Typ. 14,000 Hours) or “fit & forget” LED assembly which fits into the same lamp socket			
	Small windows use single bulbs or LED arrays Medium windows use dual bulbs or LED arrays Large windows use quad bulbs or LED arrays			
Alarm legends	Laser printed film legends plus software template if required			
EMC compliance	Immunity to BS EN61000-6-2:2005 Emissions to BS EN61000-6-4:2007 + A1:2011			
LVD compliance	BS EN61010-1:2010 & IEC61010-2-201			
Operating temp.	-20°C to +50°C (lamp version) -20°C to +60°C (LED version)	Storage Temp.	-20°C to +80°C	
Humidity	0 to 95% RH Non Condensing			
Protection	Front of panel	IP41	Rear of panel	IP20
Optional covers or wall mounting enclosures	IP54 to IP67 on request			
Terminals	Rising clamp type terminals. Maximum cable size 2.5mm^2			
Weight	Approx. 0.3kg per module			

6.1 General

Supply voltage:- 24VDC (19 to 28VDC)
Quiescent supply current 9mA per channel @ 24VDC

ALARM STATE CURRENT PER CHANNEL	FILAMENT LAMP VERSION			FIT AND FORGET L.E.D. VERSION		
Window size	Small window	Medium window	Large window	Small window	Medium window	Large window
Standard systems	45 mA	90 mA	180 mA	20 mA	40 mA	80 mA
Systems with repeat relays	55 mA	100 mA	190 mA	30 mA	50 mA	90 mA
Pushbutton module plus common relays and integral audible alarm					100 mA Extra	

6.2 Fuse Details - SPR Module

FUSE	FUNCTION	RATING	TYPE	PURPOSE
F1	Logic supply	10A/T	20 x 5 mm	Protects the logic supply within the alarm annunciator
F2	Signal supply	1A/F	Surface mount	Protects the signal supply voltage feed to the common “C” terminals

6.3 Fuse Details - S/O Module

FUSE	FUNCTION	RATING	TYPE	PURPOSE
F1	Logic supply	5A/T	20 x 5 mm	Protects additional 24VDC supply feed when current required exceeds one SPR module
F2	Signal supply	1A/F	Surface mount	Protects the signal supply voltage feed to the common “C” terminals

6.4 Suitable Power Supplies

The table below indicates the maximum numbers of alarm channels that can be connected to a standard power supply from our range of products. Each PSU provides a 24VDC output for use as the logic voltage to the annunciator.

Note: Any external power supply connected to the annunciator must be compliant to UL60950 or EN60950 or suitable equivalent standards.

6.5 P725 Annunciator Standard Versions

PSU RATING	LED VERSION			LAMP VERSION		
@ 24VDC	WINDOW TYPE			WINDOW TYPE		
CURRENT (A)	SMALL	MEDIUM	LARGE	SMALL	MEDIUM	LARGE
1.1	34	20	11	18	10	5
1.8	58	34	19	31	17	9
2.5	82	49	27	44	24	13
4.5	151	89	49	81	44	23
6.5	220	130	72	118	64	34
12.5		253	139	229	125	65

6.6 P725 Annunciator Fitted With The Repeat Relays Per Channel Option

PSU RATING	LED VERSION				LAMP VERSION		
@ 24VDC	WINDOW TYPE				WINDOW TYPE		
CURRENT (A)	SMALL	MEDIUM	LARGE		SMALL	MEDIUM	LARGE
1.1	25	17	10		15	9	5
1.8	43	29	17		26	15	8
2.5	61	40	24		37	21	12
4.5	113	74	44		69	40	22
6.5	164	108	64		100	58	32
12.5		210	125		193	112	62

Larger PSU or multiple PSU can be used if required

7. Mechanical Details

7.1 P725 Overall And Cut Out Dimensions (Pre June 2013)

CABINET DIMENSIONS IN MM						
HIGH				WIDE		
Cells	Overall	Cut-Out		Cells	Overall	Cut-Out
1	84	74		1	84	74
2	144	134		2	144	134
3	204	194		3	204	194
4	264	254		4	264	254
5	324	314		5	324	314
6	384	374		6	384	374
7	444	434	X	7	444	434
8	504	494		8	504	494
9	564	554		9	564	554
10	624	614		10	624	614
11	684	674		11	684	674
12	744	734		12	744	734
13	804	794		13	804	794
14	864	854		14	864	854
15	924	914		15	924	914
16	984	974		16	984	974

Please note:- The cut out tolerance should be with ±2mm. Annunciator depth is 145mm

Caution

The above table indicates the dimensions based on the number of cells high X cells wide this should not be confused with the number of alarm windows high and wide which can vary depending on required window size. i.e. There would be :- 1 x Large window per cell, 2 x Medium windows per cell, or 4 x Small windows per cell.

WARNING!

The 725 range is designed for panel mounting. The rear portion of the annunciator must be protected by an enclosure that is at least IP30 and can only be accessed using a key or tool. Access to the rear enclosure must be limited to service personnel only.

7.1.1 P725 Overall And Cut Out Dimensions (After June 2013)

In June 2013 we revised the surround bezel on the P725 Annunciator range resulting in a small change in the overall dimension. The change in design adds an additional 4mm compared to the previous generation. Cut-Out dimensions remained unchanged.

CABINET DIMENSIONS IN MM						
HIGH				WIDE		
Cells	Overall	Cut-Out		Cells	Overall	Cut-Out
1	**88**	74		1	**88**	74
2	**148**	134		2	**148**	134
3	**208**	194		3	**208**	194
4	**268**	254		4	**268**	254
5	**328**	314		5	**328**	314
6	**388**	374		6	**388**	374
7	**448**	434	X	7	**448**	434
8	**508**	494		8	**508**	494
9	**568**	554		9	**568**	554
10	**628**	614		10	**628**	614
11	**688**	674		11	**688**	674
12	**748**	734		12	**748**	734
13	**808**	794		13	**808**	794
14	**868**	854		14	**868**	854
15	**928**	914		15	**928**	914
16	**988**	974		16	**988**	974

Please note:- The cut out tolerance should be with ±2mm. Annunciator depth is 145mm

Caution

The above table indicates the dimensions based on the number of cells high X cells wide this should not be confused with the number of alarm windows high and wide which can vary depending on required window size. i.e. There would be :- 1 x Large window per cell, 2 x Medium windows per cell, or 4 x Small windows per cell.

7.2 System Capacity

The maximum number of alarms available within a single annunciator is dependent on the maximum number of cards the system can address. This is fixed at 128 two channel cards, making the maximum system size for all window sizes 256 channels.

In applications where a number of separate annunciators are linked together to form a common system the max capacity for the whole system will remain at 256 alarms.

7.3 Panel Mounting Clamps

The annunciator is shipped with the panel mounting clamps fitted to the sides of the unit these must be removed to allow the unit to be placed in the panel cut out and secured from behind. Once the unit has been placed in the panel cut out the panel clamps and screws are used to secure the unit as shown below. Maximum panel thickness 5mm

Securing the Annunciator into the panel

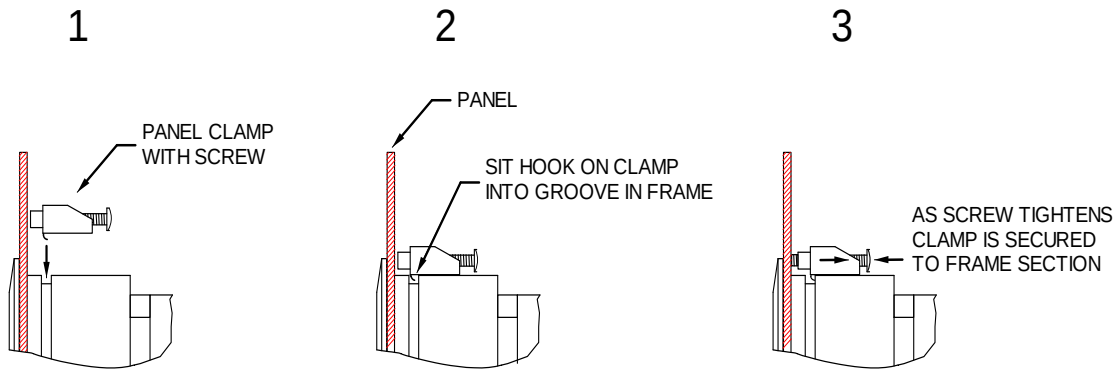

8. Alarm Sequences

8.1 Summary

Each channel within the annunciator can be set to operate in a pre-defined manner in accordance with internationally recognised standards ISA-S18.1 1979 (R2004) alarm sequences. Typically when an alarm occurs the associated window will flash and the operator uses specific pushbuttons to control the audible alarm and associated lamps or LED's:-

Test is used to test the lamps or optional LED's only by illuminating them in a steady on state for as long as the pushbutton is pressed**.**

System Test is used to simulate a full functional test therefore all windows and horn circuits will operate in accordance with the selected sequence and additional pushbuttons will need to be pressed to step through the sequence and return the unit to its normal state.

Mute is used to silence the audible but allow the associated alarm window to continue to operate as per the selected sequence.

Acknowledge will silence the audible alarm and change the state of the associated window in accordance with the selected sequence.

Reset will return the alarm to the normal off state only if the unit has been acknowledged and the associated alarm contact has returned to its normal non-alarm state.

First Reset is used after acknowledge to reset the flash sequence on the first alarm to occur within a defined group of alarms. Once first reset has been pressed the next alarm to occur within the group will flash at the first-up alarm rate.

8.2 Audible Alarm Grouping

Each channel within the annunciator can be set to operate the audible alarm relays as follows:-

1. Critical horn relay
2. Non critical horn relay
3. Both the critical and non critical horn relay
4. Neither of the horn relays (Typically status only alarms)

Please note channels, which are set to operate the critical horn relay, will automatically operate the internal piezo buzzer.

8.3 Ringback Audible

When using ISA "R" ringback sequence the MULT relay can be set to operate as a ringback audible if required. The ringback audible would normally have a distinct tone to allow the operator to distinguish between a standard alarm and an channel that has returned to normal and needs to be reset.

9. Additional Features

9.1 Automatic Reset

Once an alarm has been acknowledged and its input has returned to its normal state the alarm can be set to automatically reset without the operator having to press the reset pushbutton.

9.2 Non-Latch Sequence (No Lock-In)

Alarms can be set to non lock-in, which allows the alarm to automatically return to the non alarm (off) state as soon as the signal input returns to normal.

9.3 Reflash Feature

Input reflash is used to inform the operator that an acknowledged alarm has returned to normal and re-alarmed whilst waiting for reset.

9.4 Ringback Sequence

Ringback sequence is used to inform the operator, both visually and audibly, that an alarm condition has cleared and the channel can be reset to its normal off state. When a contact returns to normal the associated window will flash at approx ½ the speed of a normal alarm and the audible alarm will sound. This identifies the specific alarm and allows the operator to reset as soon as the process is normal. As an option the MULT relay can be used to drive a 2nd audible set to a different tone to the main audible for use as a ringback audible. Please note ringback cannot function if a channel is set to auto- reset or non lock- in.

9.5 Two Pushbutton Operation

In certain circumstances using remote pushbuttons, it may be desirable to use only two pushbuttons: reset and lamp test. The reset pushbutton is used to acknowledge an alarm if the contacts are in the alarm condition and to reset it if the contacts are clear.

9.6 First-Up Sequences

When monitoring devices with interlinked functions such as a turbine or compressor it is often important to know the specific alarm that occurred first, as it will invariably result in cascade of secondary alarms. This allows the operator to focus on the root cause of failure and therefore limits the downtime and associated costs. This is achieved by having the first-up alarm flashing in a different manner compared to the subsequent alarms. Four different first-up sequences are available F0, F1, F2 and F3 as detailed below and in the following sequence tables.

F0 The standard mode adopted by Eaton, which indicates the first-up alarm by flashing at twice the rate of subsequent alarms.

F1 In this mode subsequent alarms appear in the acknowledged state, hence they do not flash. The audible device does not operate when subsequent alarms occur, unless still operating from the first alarm. The acknowledge pushbutton will reset the first-up indication.

F2 In this mode all subsequent alarms do not flash, they will however operate the audible device. The acknowledge pushbutton will reset the first-up indication.

F3 In this mode initial alarms appear with an intermittent flash rate and subsequent alarms flash at a steady rate. On acknowledge subsequent alarms revert to the steady on state and only the first alarm continues to flash at a slower rate.

Please note auto reset and non lock- in functions are not recommended when using first up sequences as the true sequence of events cannot be guaranteed.

10. Sequence Configuration and Tables

Each pair of alarm channels can be configured to suit the operating sequence required, as listed in the ISA publication "Annunciator sequences and specifications" S18.1 1979.(R2004). Systems can be configured with different features on each individual channel and there is no need to switch the power off when making these changes. Different operating modes can be selected using the integral Pushbutton/Programming module as described later in this manual. The following tables show the most commonly used examples.

10.1 ISA-Sequence M - Manual Reset

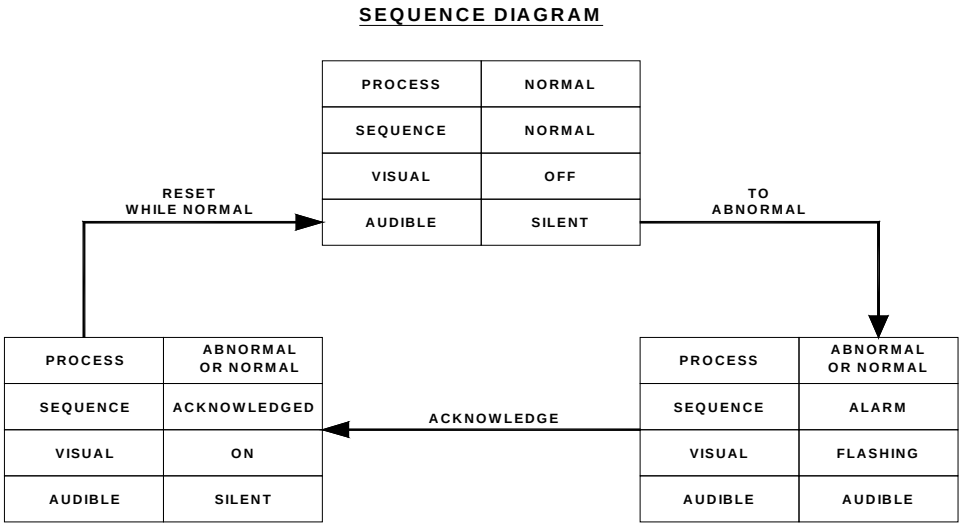

SEQUENCE ISA M
(MANUAL RESET)

SEQUENCE TABLE

LINE	PROCESS CONDITION	PUSHBUTTON OPERATION	SEQUENCE STATE	VISUAL DISPLAY	ALARM AUDIBLE DEVICE	REMARKS
1	NORMAL		NORMAL	OFF	SILENT	
2	ABNORMAL		ALARM	FLASHING	AUDIBLE	LOCK-IN
3	ABNORMAL OR NORMAL	ACKNOWLEDGE	ACKNOWLEDGED	ON	SILENT	MANUAL RESET REQUIRED
4A	ABNORMAL	RESET	TO LINE 3			
4B	NORMAL	RESET	NORMAL	OFF	SILENT	MANUAL RESET

SEQUENCE FEATURES

1. ACKNOWLEDGE, RESET AND TEST PUSHBUTTONS
2. ALARM AUDIBLE DEVICE
3. LOCK-IN OF MOMENTARY ALARMS UNTIL ACKNOWLEDGED
4. THE AUDIBLE DEVICE IS SILENCED AND FLASHING STOPS WHEN ACKNOWLEDGED
5. MANUAL RESET OF ACKNOWLEDGED ALARM INDICATIONS AFTER PROCESS CONDITIONS RETURN TO NORMAL
6. OPERATION TEST

10.2 ISA-Sequence A - Automatic Reset

SEQUENCE DIAGRAM

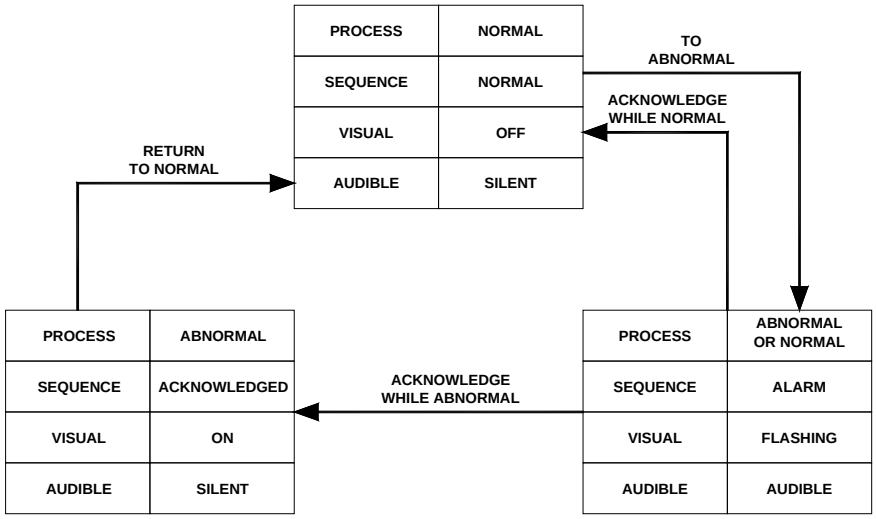

SEQUENCE ISA A
(LOCK IN)

SEQUENCE TABLE

LINE	PROCESS CONDITION	PUSHBUTTON OPERATION	SEQUENCE STATE	VISUAL DISPLAY	ALARM AUDIBLE DEVICE	REMARKS
1	NORMAL		NORMAL	OFF	SILENT	
2	ABNORMAL		ALARM	FLASHING	AUDIBLE	LOCK-IN
3A	ABNORMAL	ACKNOWLEDGE	ACKNOWLEDGED	ON	SILENT	MAINTAINED ALARM
3B	NORMAL	ACKNOWLEDGE	TO LINE 4			MOMENTARY ALARM
4	NORMAL		NORMAL	OFF	SILENT	AUTOMATIC RESET

SEQUENCE FEATURES

1. ACKNOWLEDGE AND TEST PUSHBUTTONS
2. ALARM AUDIBLE DEVICE
3. LOCK-IN OF MOMENTARY ALARMS UNTIL ACKNOWLEDGED
4. THE AUDIBLE DEVICE IS SILENCED AND FLASHING STOPS WHEN ACKNOWLEDGED
5. AUTOMATIC RESET OF ACKNOWLEDGED ALARM INDICATIONS WHEN PROCESS CONDITIONS RETURN TO NORMAL
6. OPERATION TEST

10.3 ISA-A-4 Sequence - Non Lock-In Function

SEQUENCE DIAGRAM

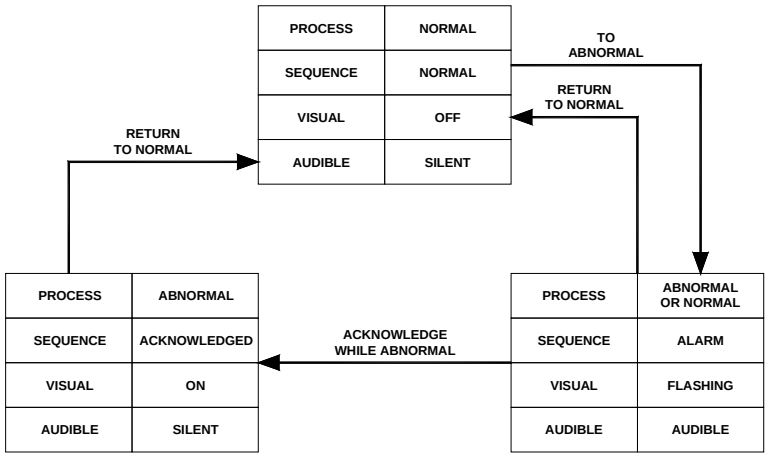

SEQUENCE ISA A - 4
(NON LOCK IN)

SEQUENCE TABLE

LINE	PROCESS CONDITION	PUSHBUTTON OPERATION	SEQUENCE STATE	VISUAL DISPLAY	ALARM AUDIBLE DEVICE	REMARKS
1	NORMAL		NORMAL	OFF	SILENT	
2	ABNORMAL		ALARM	FLASHING	AUDIBLE	
3	RETURN TO NORMAL BEFORE ACKNOWLEDGE		NORMAL	OFF	SILENT	NON LOCK IN
4	ABNORMAL	ACKNOWLEDGE	ACKNOWLEDGED	ON	SILENT	MAINTAINED ALARM
6	NORMAL		NORMAL	OFF	SILENT	AUTOMATIC RESET

SEQUENCE FEATURES

1. ACKNOWLEDGE AND TEST PUSHBUTTONS
2. ALARM AUDIBLE DEVICE
3. NON LOCK-IN OF MOMENTARY ALARMS
4. THE AUDIBLE DEVICE IS SILENCED AND FLASHING STOPS WHEN ACKNOWLEDGED
5. AUTOMATIC RESET OF ALARM INDICATIONS WHEN PROCESS CONDITIONS RETURN TO NORMAL BEFORE OR AFTER ACKNOWLEDGE (NON LOCK-IN)
6. OPERATION TEST

10.4 ISA-R Sequence - Ringback

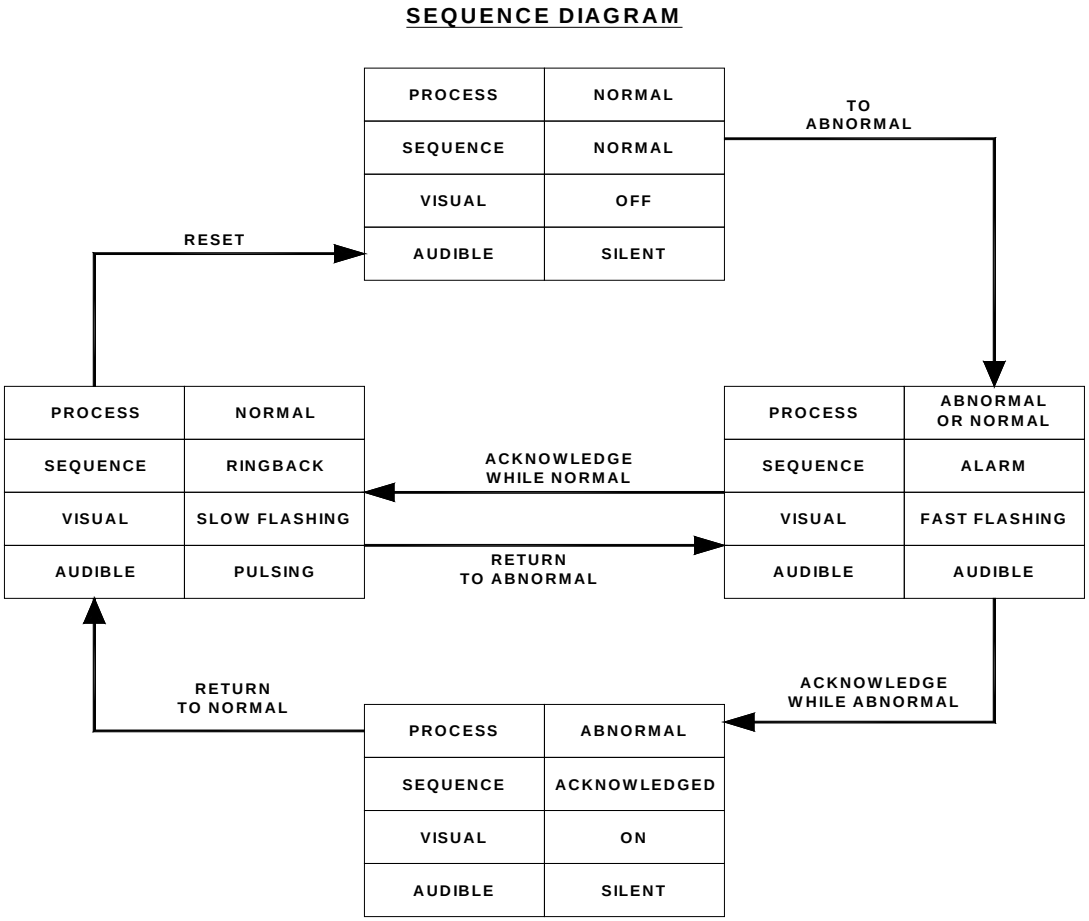

SEQUENCE ISA R
(RING BACK)

SEQUENCE TABLE

LINE	PROCESS CONDITION	PUSHBUTTON OPERATION	SEQUENCE STATE	VISUAL DISPLAY	ALARM AUDIBLE DEVICE	REMARKS
1	NORMAL		NORMAL	OFF	SILENT	
2	ABNORMAL		ALARM	FAST FLASHING	AUDIBLE	LOCK-IN
3A	ABNORMAL	ACKNOWLEDGE	ACKNOWLEDGED	ON	SILENT	MAINTAINED ALARM
3B	NORMAL	ACKNOWLEDGE	TO LINE 4			MOMENTARY ALARM
4	NORMAL		RINGBACK	SLOW FLASHING	SILENT	MANUAL RESET REQUIRED
5	ABNORMAL		TO LINE 2			RETURN TO NORMAL
6	NORMAL	RESET	NORMAL	OFF	SILENT	MANUAL RESET

SEQUENCE FEATURES

1. ACKNOWLEDGE, RESET AND TEST PUSHBUTTONS
2. ALARM AUDIBLE DEVICE (OPTIONAL RINGBACK AUDIBLE DEVICE)
3. LOCK-IN OF MOMENTARY ALARMS UNTIL ACKNOWLEDGED
4. THE AUDIBLE DEVICE IS SILENCED AND FLASHING STOPS WHEN ACKNOWLEDGED
5. RINGBACK VISUAL AND AUDIBLE INDICATIONS WHEN PROCESS CONDITIONS RETURN TO NORMAL.
6. MANUAL RESET OF RINGBACK INDICATIONS
7. OPERATION TEST

Optional Ringback Audible

As an option the Multifunction “MULT” Relay can be used to provide a separate Ringback audible if required. When an alarm returns to normal a MULT relay set as a Ringback audible will activate until the Reset Pushbutton has been pressed. (See Para 5.9 for details)

10.5 ISA-F1A Sequence - Automatic Reset First-Up

SEQUENCE DIAGRAM

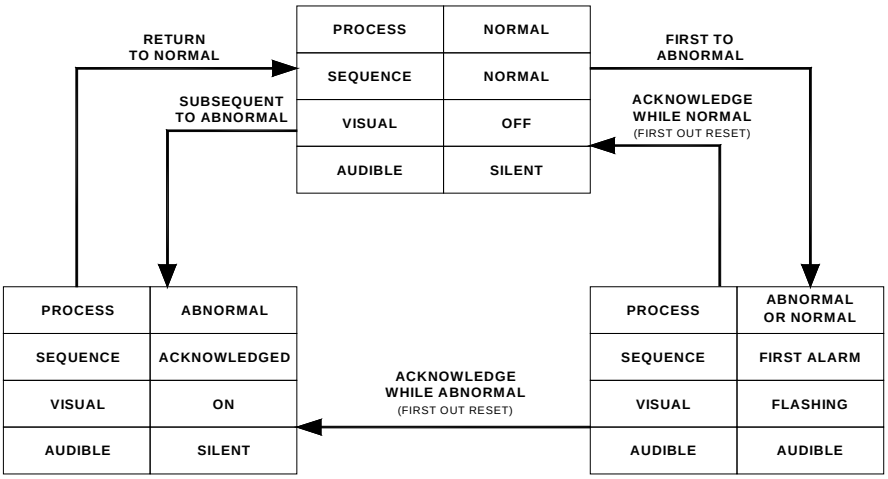

SEQUENCE ISA F1A

(AUTOMATIC RESET FIRST OUT WITH NO SUBSEQUENT ALARM STATE)

SEQUENCE TABLE

LINE	PROCESS CONDITION		PUSHBUTTON OPERATION	SEQUENCE STATE	VISUAL DISPLAY	ALARM AUDIBLE DEVICE	REMARKS
1	NORMAL			NORMAL	OFF	SILENT	
2	FIRST	ABNORMAL		FIRST ALARM	FLASHING	AUDIBLE	LOCK-IN
3	SUB	ABNORMAL		ACKNOWLEDGED	ON	SILENT	NO LOCK-IN
4A	FIRST	ABNORMAL	ACKNOWLEDGE	TO LINE 3			MAINTAINED ALARM FIRST OUT RESET
4B	FIRST	NORMAL	ACKNOWLEDGE	TO LINE 3			MOMENTARY ALARM FIRST OUT RESET
5	NORMAL			NORMAL	OFF	SILENT	AUTOMATIC RESET

SEQUENCE FEATURES

1. ACKNOWLEDGE, AND TEST PUSHBUTTONS
2. ALARM AUDIBLE DEVICE
3. LOCK-IN OF MOMENTARY FIRST ALARM ONLY. NO LOCK IN OF MOMENTARY SUBSEQUENT ALARMS.
4. FLASHING AND AUDIBLE INDICATIONS FOR FIRST ALARM ONLY. NEW SUBSEQEUNT ALARMS GO TO THE ACKNOWLEDGE STATE.
5. FIRST OUT INDICATION IS RESET AND THE AUDIBLE IS SILENCED WHEN ACKNOWLEDGED.
6. AUTOMATIC RESET OF ACKNOWLEDGED ALARM INDICATIONS WHEN PROCESS CONDITIONS RETURN TO NORMAL
7. OPERATIONAL TEST

10.6 ISA-F2M-1 Sequence - Manual Reset First-Up

SEQUENCE DIAGRAM

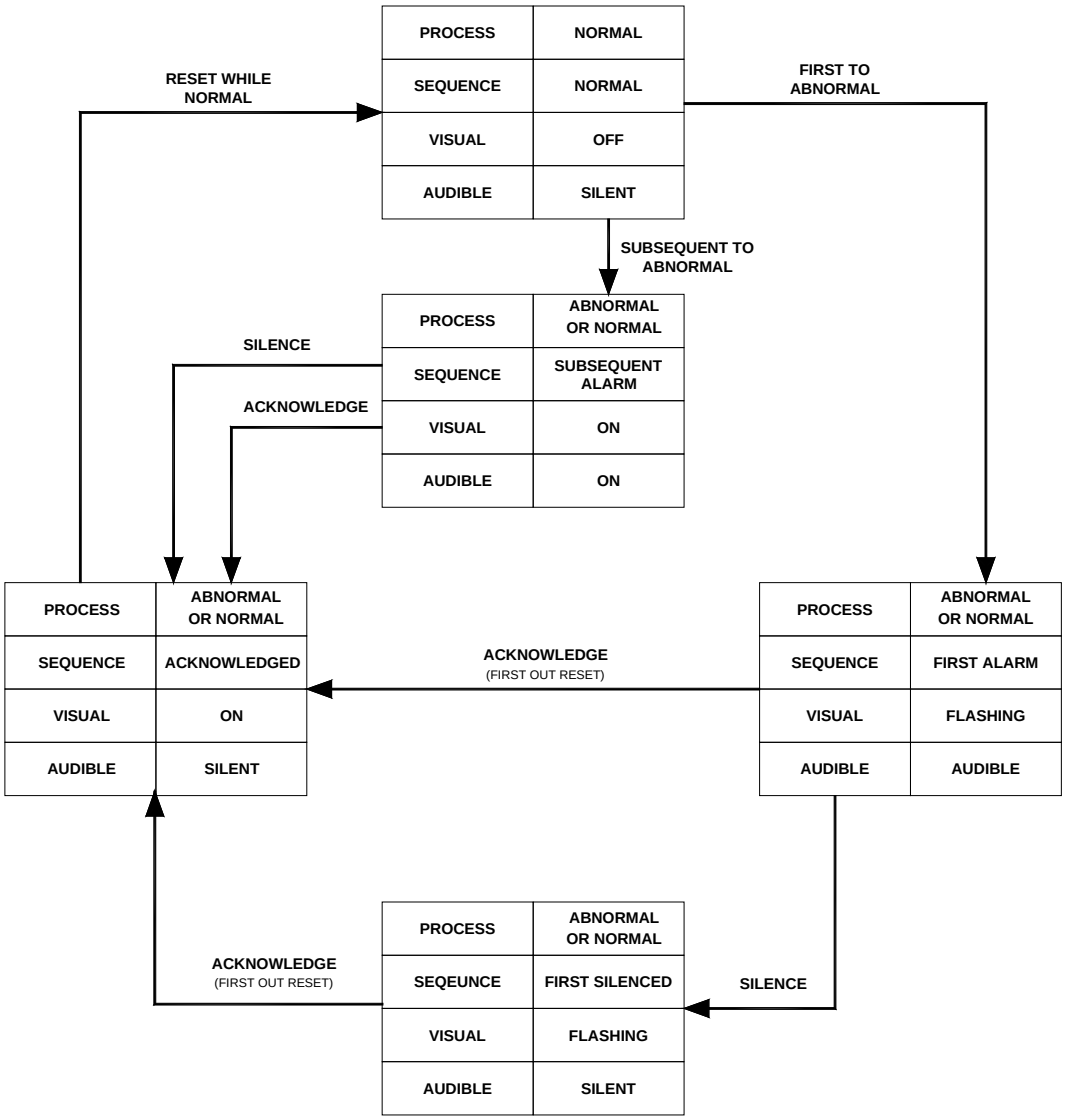

SEQUENCE ISA F2M-1

(MANUAL RESET FIRST OUT WITH NO SUBSEQUENT ALARM FLASHING & SILENCED PUSHBUTTON)

SEQUENCE TABLE

LINE	PROCESS CONDITION		PUSHBUTTON OPERATION	SEQUENCE STATE	VISUAL DISPLAY	ALARM AUDIBLE DEVICE	REMARKS
1	NORMAL			NORMAL	OFF	SILENT	
2	FIRST	ABNORMAL		FIRST ALARM	FLASHING	AUDIBLE	LOCK-IN
3	SUB.	ABNORMAL		SUB. ALARM	ON	AUDIBLE	LOCK-IN
4	FIRST	ABNORMAL OR NORMAL	ACKNOWLEDGE BEFORE SIL	TO LINE 7			FIRST OUT RESET
5	SUB.	ABNORMAL OR NORMAL					
6	FIRST	ABNORMAL OR NORMAL	SILENCE	FIRST SILENCED	FLASHING	SILENT	
7	SUB.	ABNORMAL OR NORMAL	SILENCE	ACKNOWLEDGE	ON	SILENT	MANUAL RESET REQUIRED
8	FIRST	ABNORMAL OR NORMAL	ACKNOWLEDGE AFTER SILENCE	TO LINE 7			FIRST OUT RESET
9	NORMAL		RESET	NORMAL	OFF	SILENT	MANUAL RESET

SEQUENCE FEATURES

1. SILENCE, ACKNOWLEDGE, RESET AND TEST PUSHBUTTONS
2. ALARM AUDIBLE DEVICE
3. LOCK-IN OF MOMENTARY ALARMS UNTIL ACKNOWLEDGED.
4. OPTION1 – SILENCE PUSHBUTTON TO SILENCE THE ALARM AUDIBLE DEVICE WHILE RETAINING THE FIRST OUT FLASHING INDICATION
5. FLASHING INDICATION FOR FIRST ALARM ONLY. NEW SUBSEQUENT ALARMS HAVE THE SAME VISUAL INDICATION AS ACKNOWLEDGED ALARMS.
6. FIRST OUT INDICATION IS RESET WHEN ACKNOWLEDGED
7. MANUAL RESET OF ACKNOWLEDGED ALARM INDICATIONS AFTER PROCESS CONDITIONS RETURN TO NORMAL.
8. OPERATIONAL TEST

10.7 ISA-F3A Sequence - Automatic Reset First-Up

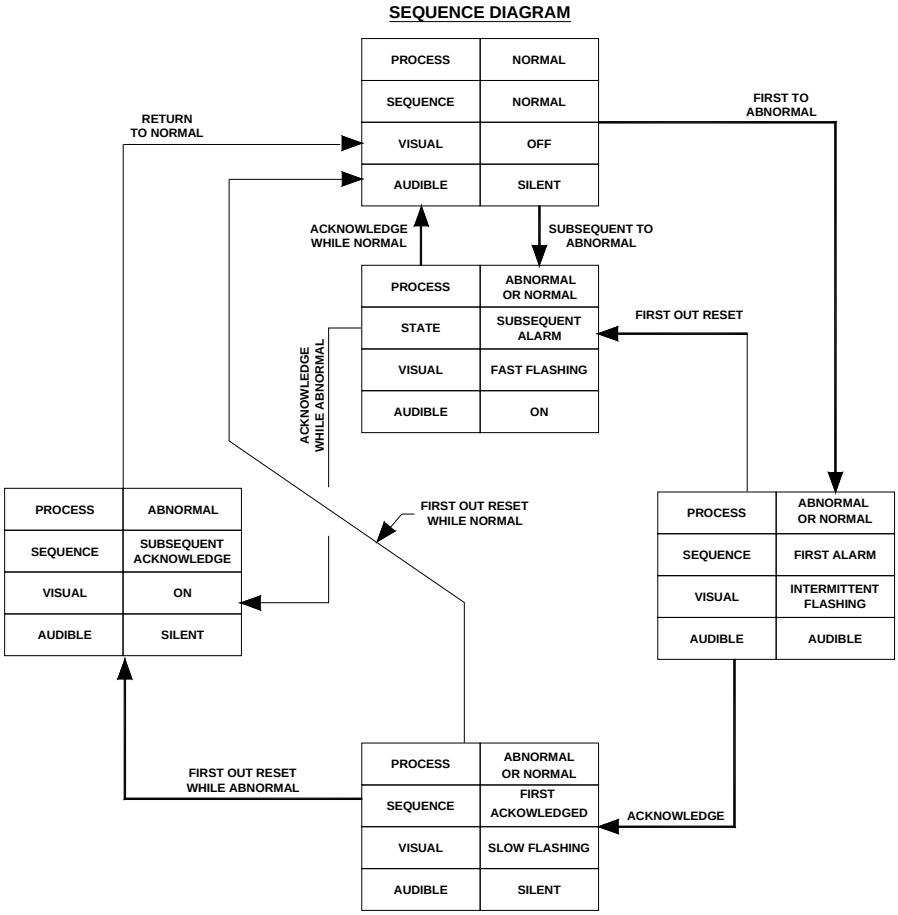

SEQUENCE ISA F3A

(AUTOMATIC RESET FIRST OUT WITHOUT FLASHING & RESET PUSHBUTTON)

SEQUENCE TABLE

LINE	PROCESS CONDITION		PUSHBUTTON OPERATION	SEQUENCE STATE	VISUAL DISPLAY	ALARM AUDIBLE DEVICE	REMARKS
1	NORMAL			NORMAL	OFF	SILENT	
2	FIRST	ABNORMAL		FIRST ALARM	INTERMITTENT FLASHING	AUDIBLE	LOCK-IN
3	SUB.	ABNORMAL		SUB. ALARM	FAST FLASHING	AUDIBLE	LOCK-IN
4	FIRST	ABNORMAL OR NORMAL	FIRST OUT RESET BEFORE ACKNOWLEDGE	TO LINE 3			FIRST OUT RESET
5	FIRST	ABNORMAL OR NORMAL	ACKNOWLEDGE	FIRST ACKNOWLEDGED	SLOW FLASHING	SILENT	FIRST OUT RESET REQUIRED
6A	SUB.	ABNORMAL		SUB. ACKNOWLEDGE	ON	SILENT	MAINTAINED ALARM
6B	SUB.	NORMAL		TO LINE 8			MOMENTARY ALARM
7A	FIRST	ABNORMAL	FIRST OUT RESET AFTER ACKNOWLEDGE	TO LINE 6A			FIRST OUT RESET
7B	FIRST	NORMAL		TO LINE 8			FIRST OUT RESET
8	NORMAL			NORMAL	OFF	SILENT	AUTOMATIC RESET

SEQUENCE FEATURES

1. SILENCE, ACKNOWLEDGE, RESET AND TEST PUSHBUTTONS
2. ALARM AUDIBLE DEVICE
3. LOCK-IN OF MOMENTARY ALARMS UNTIL ACKNOWLEDGED.
4. OPTION1 – SILENCE PUSHBUTTON TO SILENCE THE ALARM AUDIBLE DEVICE WHILE RETAINING THE FIRST OUT FLASHING INDICATION
5. FLASHING INDICATION FOR FIRST ALARM ONLY. NEW SUBSEQUENT ALARMS HAVE THE SAME VISUAL INDICATION AS ACKNOWLEDGED ALARMS.
6. FIRST OUT INDICATION IS RESET WHEN ACKNOWLEDGED
7. MANUAL RESET OF ACKNOWLEDGED ALARM INDICATIONS AFTER PROCESS CONDITIONS RETURN TO NORMAL.
8. OPERATIONAL TEST

11. Options

11.1 General

The standard 725 range of alarm annunciator is designed to meet the majority of alarm specifications but in certain applications additional options may be required. Please note:- The following options are usually specified at the time of ordering. Please consult factory if you would like to check suitability of adding options to existing units.

11.2 LED Assemblies (Option LED)

Fit and forget LED assemblies, which plug into the same lamp socket as conventional filament lamps, are available in the following colours Red, Amber, Yellow, White, Blue or Green. Please note all alarm cards are equipped with dual function output drives allowing the standard card to be used with either conventional filament lamps or LED's. Switch SW1-8 on each card is used to select the output drive characteristics.

FUNCTION	SW1-8
Outputs suitable for driving lamps	ON
Outputs suitable for driving LED's	OFF

11.3 Tropicalisation (Option TRO)

In harsh environmental conditions all of the associated cards are sprayed with a conformal coating and sealed relays are used as required.

11.4 Individual Channel Repeat Relays (Option RLY)

As an option each dual channel alarm card within the annunciator can be supplied with two relays to allow a repeat signal from each channel to be sent to third party devices as required. The non alarm coil state of each relay can be set to be either:-

FEATURE	FUNCTION	SETTING
Normally energised	F2	OFF
Normally de-energised	F2	ON

The operation mode of each relay can be selected to be either:-

Input Follower

The individual relay will activate when an alarm occurs and automatically return to normal when the signal input returns to the normal state.

FEATURE	FUNCTION	SETTING
Input follower	F18	OFF
	F19	ON

Logic Follower

The individual relay will activate when an alarm occurs and only return to normal when the signal input has returned to the normal state and the logic has reset, this may require the operator to press the associated pushbuttons to reset the alarm depending on the sequence selected.

FEATURE	FUNCTION	SETTING
Logic follower	F18	ON
	F19	OFF

Display Follower
The individual relay will activate when an alarm occurs and faithfully mimic the state of the output drive to the associated lamp (flashing, on or off)

FEATURE	FUNCTION	SETTING
Display follower	F18	ON
	F19	ON

11.5 Individual Channel Dual Repeat Relays (Option RL2)
In applications that require two repeat relay outputs for each channel a dual channel alarm card complete with repeat relays and a dual channel relay card are required. The dual channel relay card l provides the additional set of volt-free changeover contacts. Please note:- As this feature requires additional card slots it is only available on systems using medium or large windows.

11.6 Customer Specified Response Time (Option CRT**)
The response time for standard units is factory set at 25ms. If alternative response times are required, option CRT is used to specify a fixed response time, between 1ms and 2 seconds.

11.7 Adjustable Response Time (Option AD*)
If specified at the time of order each channel can be supplied with facilities which allow the user to adjust the input response time. This option is supplied in one of two forms

1. AD1 and AD2 options are supplied with a trim pot for each channel which allows the user to adjust the response time between two set points as required.

2. AD3 option supplied prior to July 2009 are equipped with a trim pot per channel which allows the user to adjust the response time between two set points as required.

3. AD3 option supplied after July 2009 have an additional draughtboard fitted. The daughterboard is equipped with an 8 Way DIL switch. Four switches are allocated to each channel and these allow the user to select one of five pre-defined response times.

Option AD1 = Adjustable delay range 5mS to 50mS
Option AD2 = Adjustable delay range 20mS to 2S
Option AD3 Prior to July 2009 = Adjustable delay range 5mS to 5S
Option AD3 Supplied after July 2009 = Pre-defined delay times 5mS, 10mS, 25mS, 200mS or 5S
Option AD3 Supplied after Dec 2012 = 5mS, 10mS, 25mS, **50mS**, 200mS, **2S**, 5S or **60S**

Please note: When setting activation delays it is important to note that the same delay will apply to the return to normal state, for example:- If a channel is set for 5 Seconds delay the input contact must be in the abnormal state for a minimum of 5 Seconds before the alarm activates. Once the input contact has returned to normal the channel will not recognise the return to normal state for a minimum of 5 Seconds and therefore the channel cannot be reset until this delay has elapsed.

Where AD2 or AD3 option is requested on P725 annunciators supplied after March 2009 each channel is equipped with a switch, (SW2), which allows the user to select

- *Return to normal state should have the same delay as the alarm activation or*
- *Return to normal state as soon as the input returns to normal.*

When using AD options the user must use SW2 to set the normally open or normally closed input state as detailed later in the manual. Function F1 should be set to OFF when using SW2 as described in Section 24 of this manual.*

11.8 Disable Integral Horn (Option DHN)

All units are supplied with an integral Piezzo audible as standard, which follows the critical audible group (HNA). If remote audibles only connected to the integral horn relays are required the unit can be supplied with the horn disabled.

11.9 Higher Field Contact Voltages (Option FCxx)

Standard 725 annunciators are able to accept powered signal inputs @ 24VAC/DC and as an option the unit can be supplied suitable for direct connection to powered inputs

OPTION CODE	VOLTAGE
FC048	48VAC / DC
FC125	125VAC / DC

11.10 Supply Input / Output Module (Option SI/O)

The SI/O module is required in the following instances: -

1. In larger systems to distribute the 24VDC logic supply load evenly
2. To interlink multiple annunciator cabinets together to form larger systems
3. Where the pushbutton/programming module is fitted remote from the unit

This module is fitted within a standard cell but does not use a card slot so it does not affect the number of alarm channels available.

11.11 RS485 Serial Communications (Option COM) Part No. CB4468POP1

All 725 range of annunciators can be fitted with the optional serial communications card, which is usually located in the cell directly above the pushbutton module. This card provides RS485 bi-directional communication to and from third party devices using modbus ASCII or modbus RTU protocols as standard. All pushbutton controls can be local to the annunciator or driven remotely via the communications link. Up to 64 annunciators can be multi-dropped on the same communications connection.

11.12 Individual Channel Repeat Relays Powered By The Field Contact Voltage (Option RAV)

Option RAV is used in safety critical applications to power the individual channel repeat relays using the field contact supply voltage. In this mode even if the annunciator logic supply is lost the repeat relay facility will continue to function as normal. Please note:- The repeat relay can only function as a signal follower when option RAV is used.

11.13 Three Horn Relay Outputs (Option 3HN)

Option 3HN provides three horn relays, (HNA, HNB, GPB), and one common alarm relay (GPA) instead of two horn and two group relays. Channels are programmed to operate any of the relays using function codes, F23 = HNA, F24 = HNB, F22 = GPB, (F21 = GPA).

11.14 Three Group Relay Outputs (Option 3GP)

Option 3GP provides three group relays, (GPA, GPB, HNB), and one horn relay (HNA) instead of the two horn and two group relays. Channels are programmed to operate any of the relays using function codes, F21 = GPA, F22 = GPB & F24 = HNB, (F23 = HNA).
Please note:- The HNB relay is not equipped with a reflash function.

11.15 Repeat Pushbutton Output (Option RPB)

Option RPB provides two independent volt-free contact outputs, which follow the operation of a chosen pushbutton. A two channel relay card is added to the system and switches on the card are used to set the function of each relay to follow either:- System test, lamp test, silence, ack, reset or first reset.

11.16 Group Relays Follow Inputs (Option GFI)

Option GFI allows the GPA and GPB group relays to follow the function of the alarm contact. If an alarm occurs within the group the relay will change state and will remain in the alarm condition until the associated input has returned to normal. If multiple inputs within the group are in the alarm state all inputs must return to normal before the group relay automatically returns to normal. Individual channels can be assigned to the GPA and GPB relays, (function F21 & F22), in the normal way and the optional reflash function, (Function F8 & F9), can be enabled as required.

11.17 Additional Group Relay Contact (Options 2GA or 2GB)

Option 2GA or 2GB is used in applications where a second isolated contact is required to work as a slave of either the GPA or GPB relay, (Function F21 & F22), The multi function relay (MUL) located in the SPR module is used to provide the additional contact.

11.18 Total Group Relay (Option RTG)

Option RTG is used in applications that require two common alarm groups, (GPA and GPB), PLUS a total group relay. The multi function relay (MUL) located in the SPR module is used to provide the total group relay contact, which automatically operates if either the GPA or GPB relay are activated.

11.19 SPR Module (Supply-Pushbuttons-Relay Module)

All 725 annunciators are equipped with 24VDC Logic. If external AC/DC or DC/DC Power supplies are required they should be capable of handling the maximum surge current, which is typically twice the maximum load when all lamps are on steady.

11.20 Logic Power Connections

In standard applications a power supply with a single 24VDC output can be wired to the 24VDC logic power by connecting to terminals 0V and +V on the rear of the SPR Module.

11.21 Signal Supply Voltage Connections

In standard applications the logic supply terminals OV and +V can be cross-linked to the signal supply input terminals OVC and +VC on the SPR module to provide +24VDC to distribute to the associated field contacts. (OV links to OVC and +V links to +VC)

11.22 Common Horn/Group/Multi-Function Relay & Remote P.B. Connections

Customer connections for the common functions should be wired to the rear of the SPR module. These connections are shown below: -

COMMON CONNECTIONS	
24VDC Logic power (OV & +V)	**24VDC Signal contact voltage** (OVC & +VC)
Dual horn relay contacts Critical horn relay – HNA Non critical horn relay - HNB	**Dual common alarm relay contacts** Critical group relay – GPA Non critical group relay - GPB
Multi-function relay contact MUL	**Optional remote pushbutton inputs** T = Lamp test A = Acknowledge R = Reset ST = System test M = Mute FR = First reset Pushbutton common connection = +V

12. Large Window Alarm Module Wiring

The 725 range of units supplied with large windows provide one alarm per cell. In order to maximise the use of the standard two channel alarm card all odd cells within the annunciator, (1,3,5,7, etc), are equipped with alarm cards and all even cells, (2,4,6,8, etc), are left unequipped. Channel 1 of the alarm card is routed to the lamps or LED's in the normal way and channel 2 is routed by the display motherboard to the lamps or LED's located in the cell directly below.

12.1 Standard Unit Without Repeat Relay Facility

Each cell is equipped with a type A2 back plate and a dual channel alarm card model no CB5674POP1, which is suitable for 2 signal inputs. The alarm card is located in the upper card slot

12.2 Optional Unit With Repeat Relay Facility

Each cell is equipped with a type AR2 back plate and dual channel alarm card model no CB5674POP2, which is suitable for 2 signal inputs and provides 2 relay outputs each having one set of changeover contacts. The alarm card is located in the upper card slot

Wiring Details For A2 And AR2 Modules In Large Window Versions

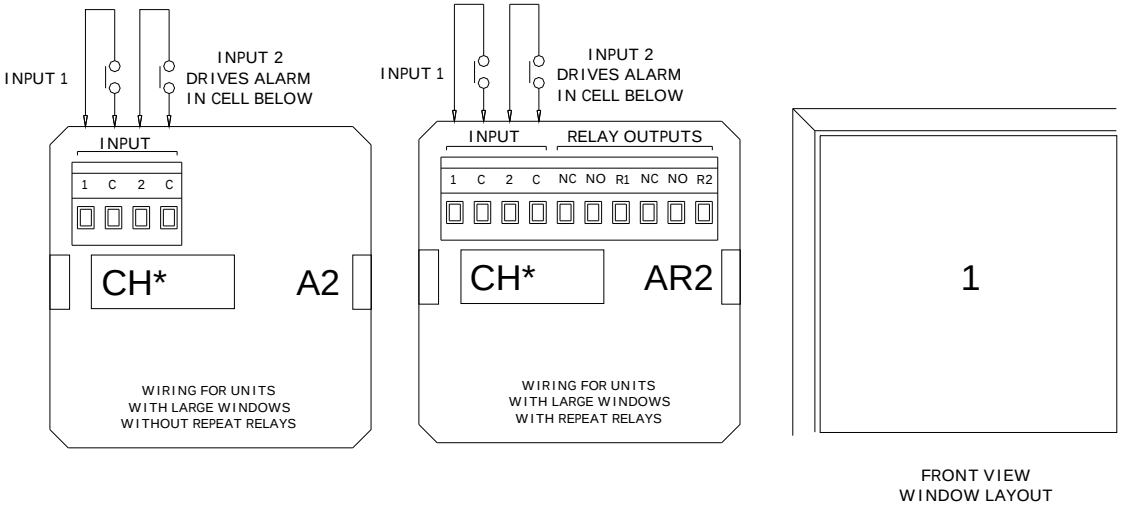

12.3 Large Window Versions Fitted With An Odd Number Of Alarms

The 725 range of units that use large windows and have an odd no of total alarms in the system, 1,3,5,7,9, ways etc, will be supplied with dual channel cards in alternative cells as described in the previous paragraph with the exception of the last cell which will be supplied for use as a single alarm cell only as detailed below.

12.4 Standard Unit Without Repeat Relay Facility

The last active alarm cell is equipped with a type A1 back plate and a dual channel alarm card model no CB5674POP1, which is suitable for 2 signal inputs. The alarm card is located in the upper card slot. Note. Only 1 channel is used in this configuration.

12.5 Optional Unit With Repeat Relay Facility

The last active alarm cell is equipped with a type AR1 back plate and dual channel alarm card model no CB5674POP2, which is suitable for 2 signal inputs and provides 2 relay outputs each having one set of changeover contacts. The alarm card is located in the upper card slot.
Note. Only 1 channel is used in this configuration.

Wiring Details For A1 And AR1 Modules Used In The Last Cell Of 725 Units Fitted With Odd Numbers Of Alarms

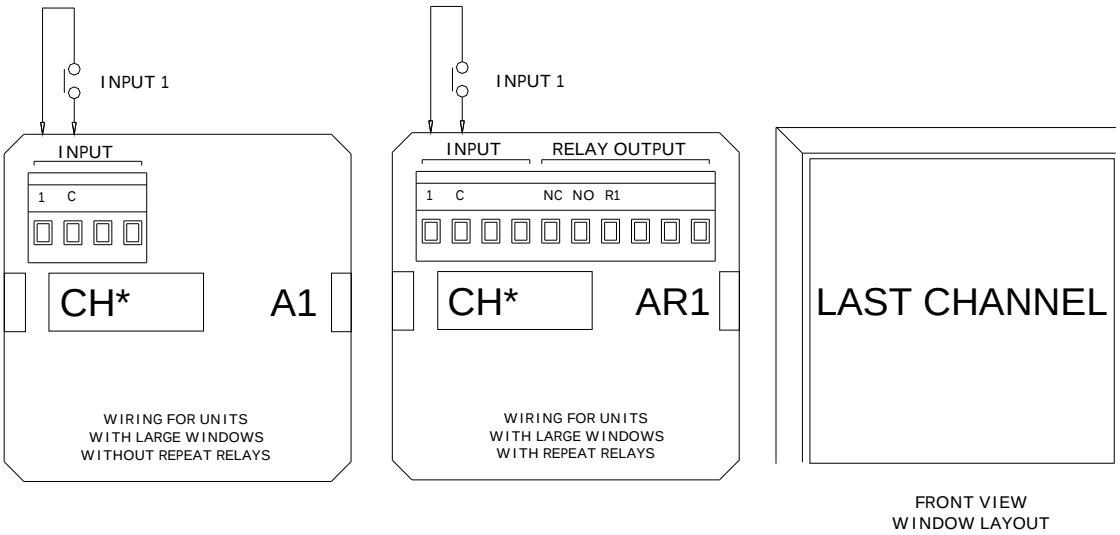

13. Medium Window Alarm Module Wiring

The 725 range of units supplied with medium windows provide two alarms per cell.

13.1 Standard Version Without Repeat Relay Facility

Each cell is equipped with a type A2 back plate and a dual channel alarm card model no CB5674POP1, which is suitable for 2 signal inputs. The alarm card is located in the upper card slot

13.2 Optional Version With Repeat Relay Facility

Each cell is equipped with a type AR2 back plate and dual channel alarm card model no CB5674POP2, which is suitable for 2 signal inputs and provides 2 relay outputs each having one set of changeover contacts. The alarm card is located in the upper card slot

Wiring Details For A2 And AR2 Medium Window Versions

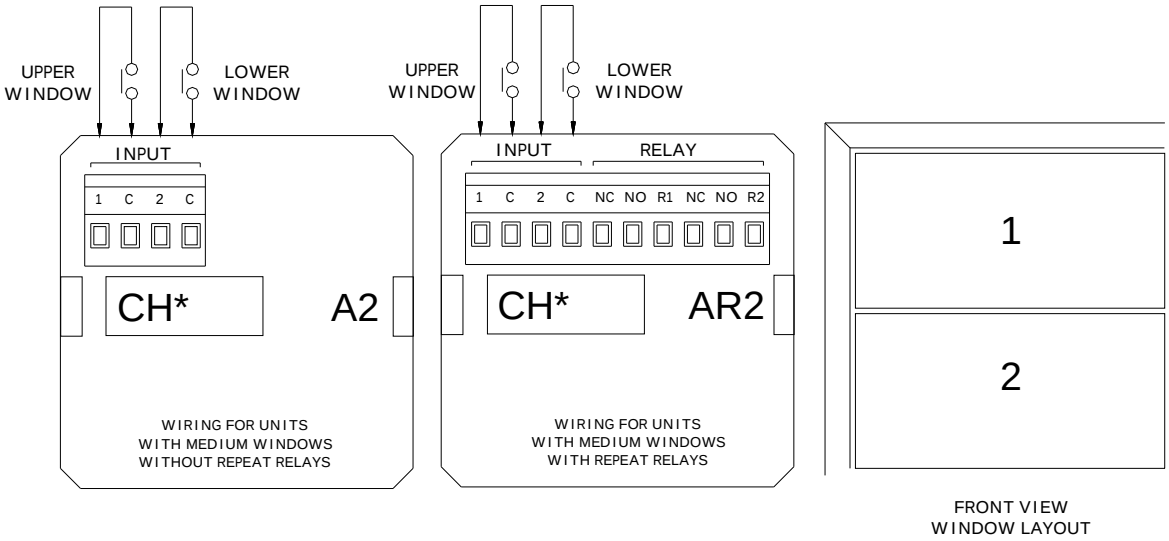

14. Small Window Alarm Module Wiring

The 725 range of units supplied with small windows provide four alarms per cell.

14.1 Standard Version Without Repeat Relay Facility

Each cell is equipped with a type A4 back plate and two x dual channel alarm cards.

Model no CB5674POP51 suitable for 2 signal inputs. The alarm card is located in the upper card slot and
Model no CB5647POP53 suitable for 2 signal inputs. The alarm card is located in the lower card slot

14.2 Optional Version With Repeat Relay Facility

Each cell is equipped with a type AR4 back pate and two x dual channel alarm cards

Model no CB5674POP52 suitable for 2 signal Inputs and equipped with 2 relay outputs each having one set of changeover contacts is located in the upper card slot

Model no CB5674POP4 suitable for 2 signal Inputs and equipped with 2 relay outputs each having one set of changeover contacts located in the lower card slot

Wiring Details For A4 And AR4 Small Window Versions

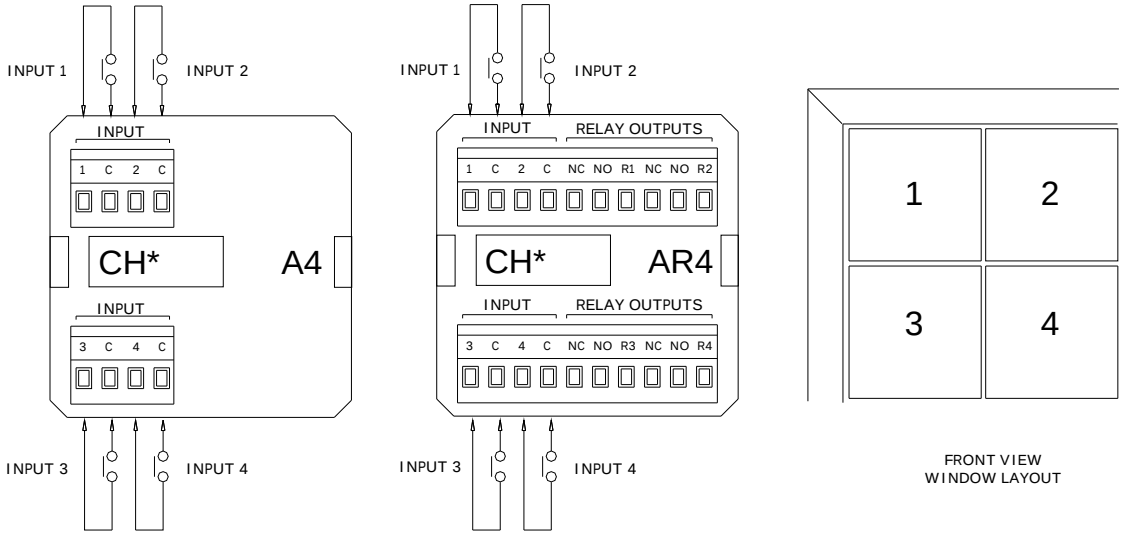

15. Dual Repeat Relay Option

15.1 Optional Version With Dual Repeat Relay Facility (Option RL2)

Each cell is equipped with a type AR* back plate, a dual channel alarm card and a dual channel repeat relay card.

Relay contacts R1 and R1A operate in conjunction with channel 1

Relay contacts R2 and R2A operate in conjunction with channel 2

Please note relays R1A & R2A follow the functions set for relays R1 & R2 they cannot be set to independently.

Wiring Details For Dual Repeat Relay Versions

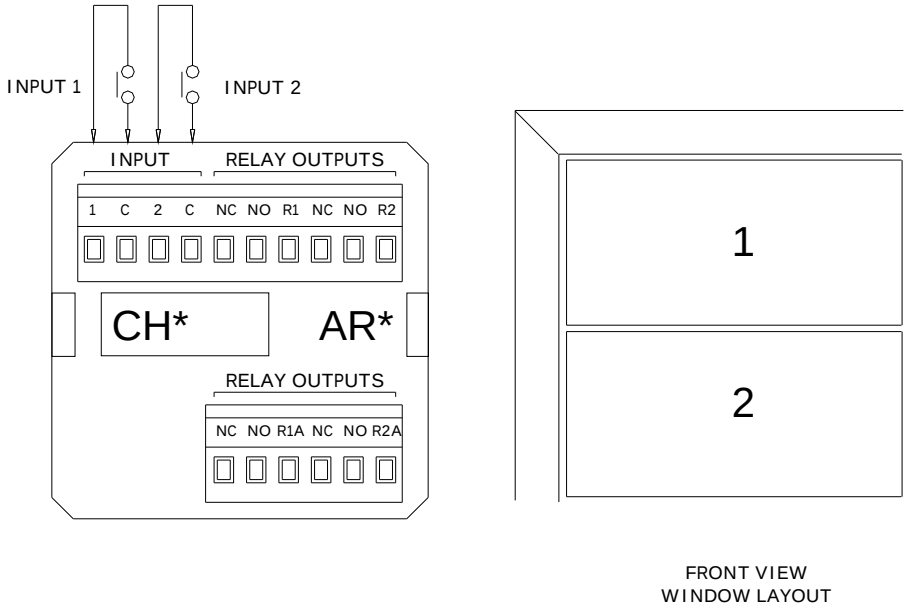

16. Signal Supply Voltage Options

16.1 Standard Systems With Combined Logic And Signal Supply.

In standard systems the 24VDC logic supply, OV and +V is cross-linked to the signal supply input terminals, OVC and +VC to provide the voltage required to power the input contacts. Systems are supplied with a factory fitted jumper between these terminals.

The signal supply input terminal +VC is used to internally link 24VDC Via a fuse to all of the common terminals within the annunciator marked “C” ready for connection to customer signal contacts

Systems Using A Single 24VDC For Logic And Signal Supply

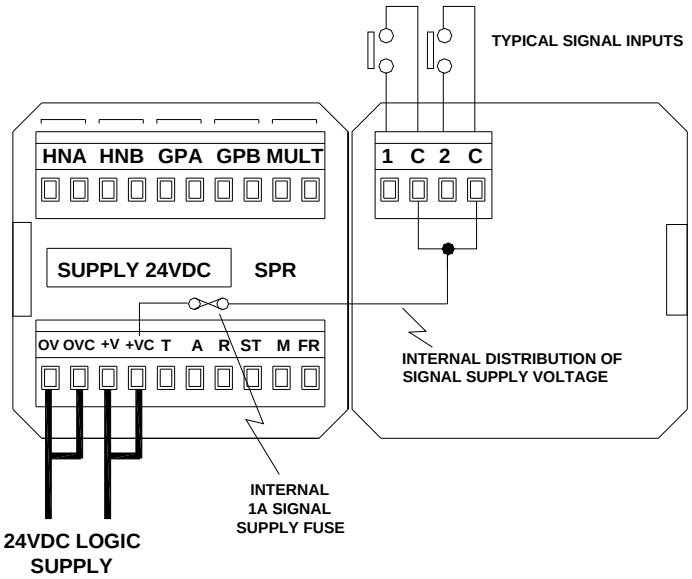

Earthing

All 725 range of Alarm Annunciators are fitted with a separate earth stud, which is located on the metal frame extrusion.

	WARNING! To ensure the final installation meets all relevant safety standards and EMC directives this earth must be connected

16.2 Standard Systems Using Externally Powered Inputs

24VDC powered inputs. As an option systems can use externally generated signal supply voltage sources to power the inputs.

If the externally generated signal supply voltage is 24VAC/DC then the standard annunciator can be used without modification.

The external supply should be connected to signal supply input terminals, OVC and +VC to distribute the voltage required to power the input contacts. +VC is used to internally link the externally generated signal supply voltage, via a fuse, to all of the common terminals within the annunciator marked “C” to allow connection to customer signal contacts

Systems Using Isolated Logic And Signal Supplies

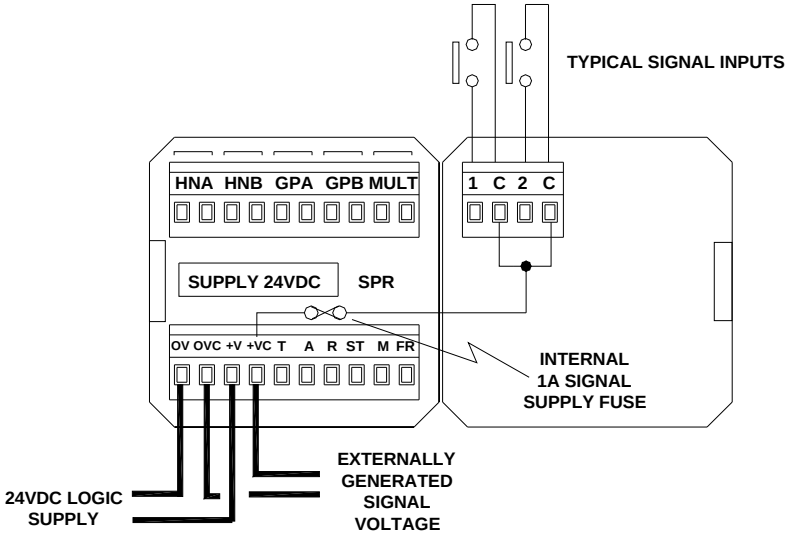

16.3 Higher Voltage Direct Powered Inputs

If higher field contact voltages are required this must be specified at the time of the order to allow the associated input conditioning components to be altered to suit. The following higher voltage externally powered input options are available 48VAC/DC or 125VAC/DC. Wiring is identical to the 24VDC-powered version shown above.

17. Common Pushbutton Module

17.1 P725 Systems Sharing A Common Pushbutton / Programme Module

Multiple 725 range of Annunciators can be supplied with one common pushbutton / programming module to allow a number of cabinets to operate as a single system.

Each of the cabinets will be equipped with an additional card “option SI/O” which provides 24VDC power connections and in / out ribbon sockets to allow all system connections, (First-Out Groups, Horn Groups, Common Alarm Groups and Pushbutton Control), to be easily connected between units.

A maximum of 256 alarm channels, distributed in cabinets to suit individual applications, can share a single pushbutton / programming module

Multiple Annunciators Sharing A Common Programming / Pushbutton Module

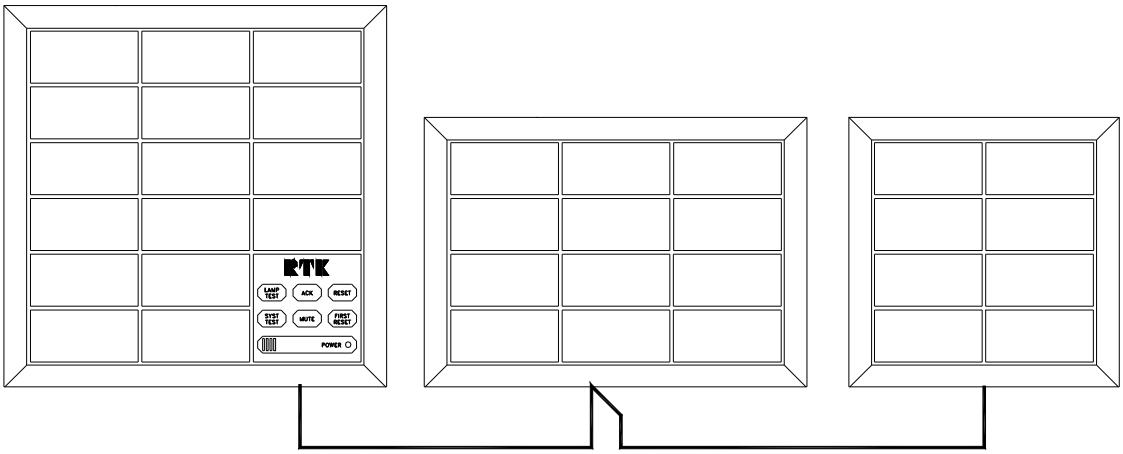

UPTO A MAX OF 256 ALARM CHANNELS

17.2 SI/O Module Details

Systems that require common pushbutton control between multiple cabinets or larger units that require additional power distribution terminals are supplied with the optional SI/O card. The SI/O module is located in the bottom row of each annunciator in the system to provide the additional connections required for logic power distributions and ribbon in / ribbon out connections as shown below. Once the ribbon cables and logic power have been connected the units will respond as a single common system. Please note the SI/O card can be fitted in addition to any alarm cards already located within the cell.

Warning:-

A 24VDC supply should be independently connected to each annunciator unit within the scheme. Power should not be daisy chained between units, which would cause excessive current to flow within single units.

SI/O Ribbon And Power Connections

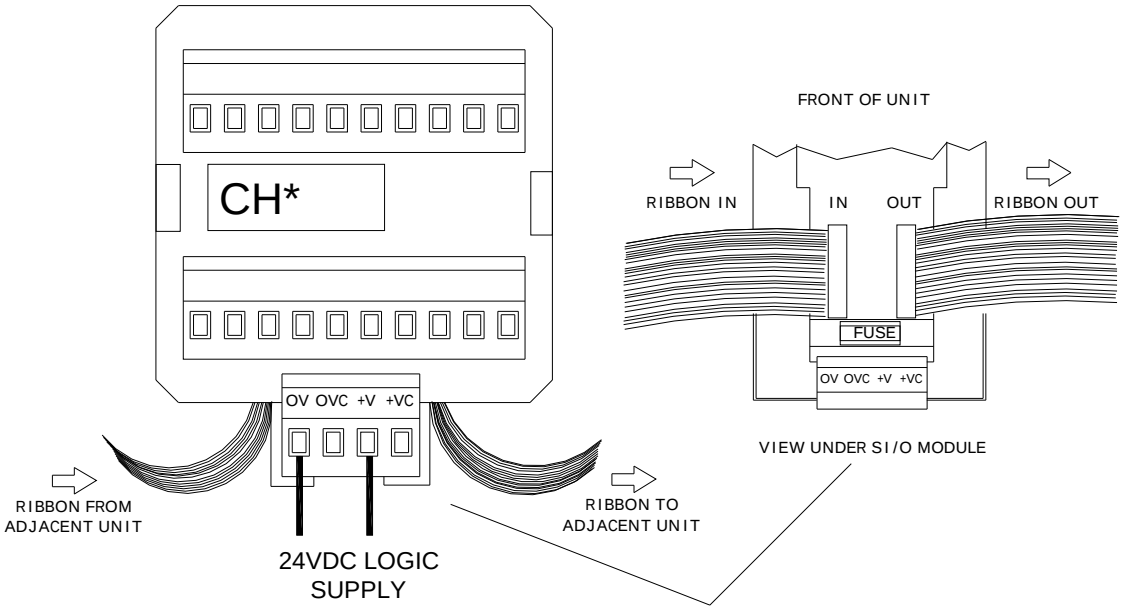

17.3 P725 Systems With Remote Pushbutton/Programming Module

As an option the pushbutton/programming module, which is required to control the alarm sequence and to allow each channel to be programmed, can be located remote from the annunciator fascia. One pushbutton module is capable of controlling a maximum of 256 alarm ways either in a single cabinet or distributed between multiple annunciators. The remote pushbutton module is equipped with terminals for the 24VDC logic supply, remote pushbuttons (if required) and the five common relays. When using the programming module it is necessary to see the alarm channel windows you are programming therefore the position of the module cannot be beyond a reasonable visual range. Interconnections between units is via a 26 way ribbon cable which is available from Eaton if required

Typical Applications Using Remote Pushbutton Module

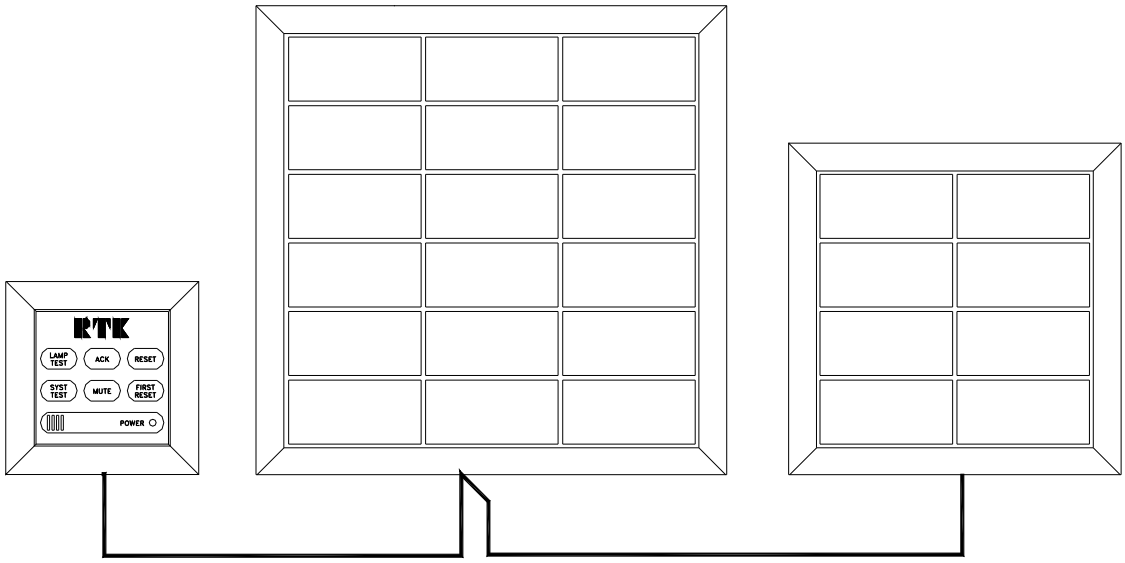

UPTO A MAX OF 256 ALARM CHANNELS

17.4 Options For Mounting The Remote Version Of The Pushbutton Module

The remote Pushbutton/Programming module can be supplied suitable for:-

17.5 Panel Mounting Version

With this option the unit is mounted through a single panel cut-out and retained using the supplied panel mounting clamps.

17.6 DIN-Rail Mounting Version

As an option the unit can be supplied with an optional DIN rail mounting to allow it to be mounted in the back of the associated panel.

17.7 Wall Mounting Version

A wall mounting enclosure is also available which will house the pushbutton module plus pushbuttons for test, acknowledge and reset and a 90dB audible alarm, if required.

17.8 Remote Pushbutton Module Connections

In order for the remote pushbutton/programming module to operate correctly this unit should be interconnected to the annunciator(s) using a ribbon cable as shown in the diagram below. This ribbon cable can also connect to further annunciators if they are all to be configured and linked to the same pushbutton module.

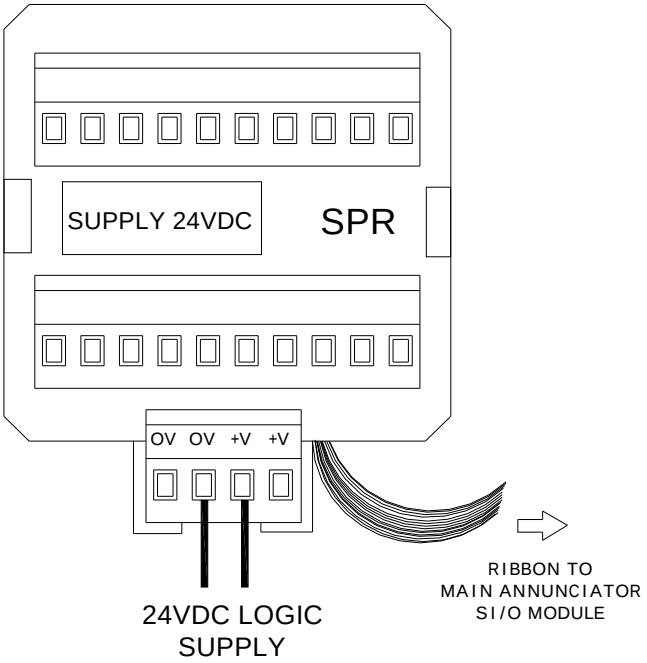

Warning

The 24VDC power supply must be independently wired to the programming module and the annunciator. Never feed the power into one unit and daisy chain the wiring.

	WARNING! If remote pushbuttons are used they must be installed in the same enclosure as the 725 annunciator.

17.9 Repeat Pushbutton Outputs (Option RPB)

Option RPB provides two independent volt-free contact outputs, which follow the operation of a chosen pushbutton. A two channel relay card is added to the system and switches on the card are used to set the function of each relay to follow either:- System test, lamp test, silence, ack, reset, first reset or sleep mode.

WARNING!

Remove **ALL** power from the unit and fully remove the card before changing any jumpers or switches

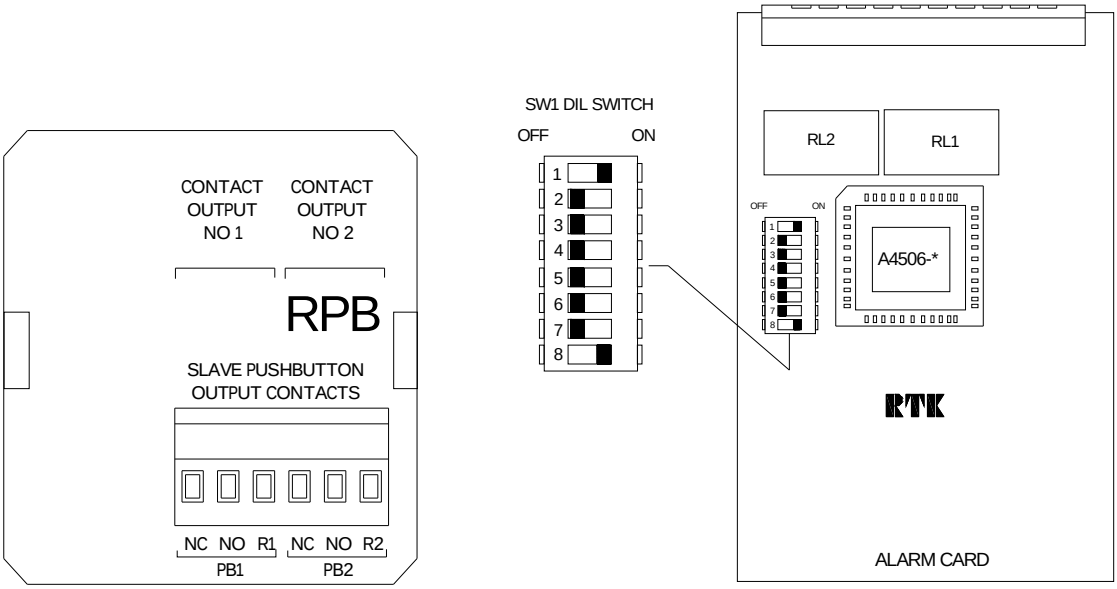

*Set Relay To Follow ** Pushbutton*

PUSHBUTTON	CHANNEL NO.1			CHANNEL NO.2		
	SW1-1	SW1-2	SW1-3	SW1-4	SW1-5	SW1-6
Lamp Test	ON	OFF	OFF	ON	OFF	OFF
Acknowledge	OFF	ON	OFF	OFF	ON	OFF
Reset	OFF	OFF	ON	OFF	OFF	ON
Mute	ON	ON	ON	ON	ON	ON
System Test	OFF	ON	ON	OFF	ON	ON
First Reset	ON	OFF	ON	ON	OFF	ON
Sleep Mode	ON	ON	OFF	ON	ON	OFF

Pulse Duration

The contact can be set to remain closed for a defined period
SW1-7 OFF = 0.25 seconds or SW1-7 ON = 0.5 seconds

18. Power Distribution

Power Distribution On Large Annunciator Units

Systems greater than 32 cells are equipped with a minimum of one SI/O supply card to allow the user to distribute the logic supply load and avoid excessive current being passed through the motherboard. The first 32 cells in the annunciator are powered from the SPR module in the normal way. Each SI/O card is designed to power a maximum of 16 cells in larger applications multiple SI/O cards will therefore be present. With systems up to 48 cells the logic supply is factory wired between the SPR and SI/O cells however on systems over 48 cells it is necessary to power the SPR and SI/O cells using separate feed wires due to the higher currents required.

Typical SPR Module Wiring On AR4 Type Alarm Module

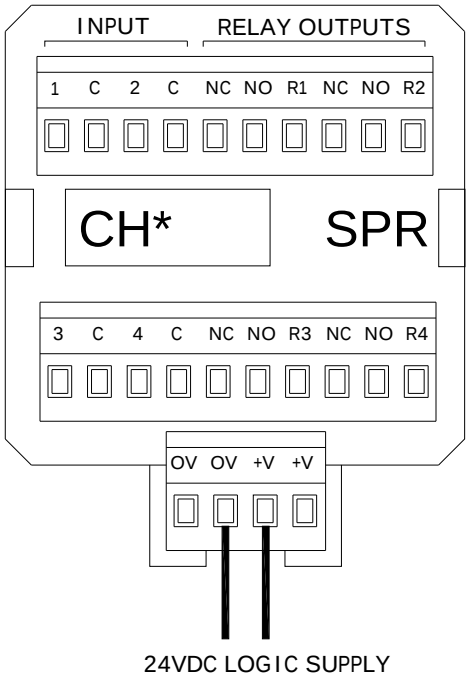

Please Note:-
SI/O cards do not occupy the space of active alarm cards therefore units can be supplied fully populated.

19. Systems Fitted With Serial Communications

Systems Fitted With The Serial Communications Option

All 725 range of units can be supplied with a bi directional serial output card and RS485 serial port, which can be used to transmit or receive serial alarm data to and from 3rd party devices on a channel-by-channel basis or in master /slaves configurations between annunciators.

19.1 Connections

It is recommended that the RS485 communications output be wired in twin twisted pair cable, which has both an inner and outer screen. The inner screen should be connected to the communications 0V line and one end of the outer screen should be taken to an instrument earth. It is also recommended that the communication cable is run in separate trunking to cables carrying high current or high voltages. The unit is provided with a communication watchdog relay, which is normally energised and will de-energise if a communications fault occurs. Note**:-** (Rx) and (Tx) refers to data transmission to the P725 annunciator i.e. Rx refers to data received in the annunciator and TX refers to data transmission out of the annunciator.

Communications Card Fitted In Typical Medium Cell

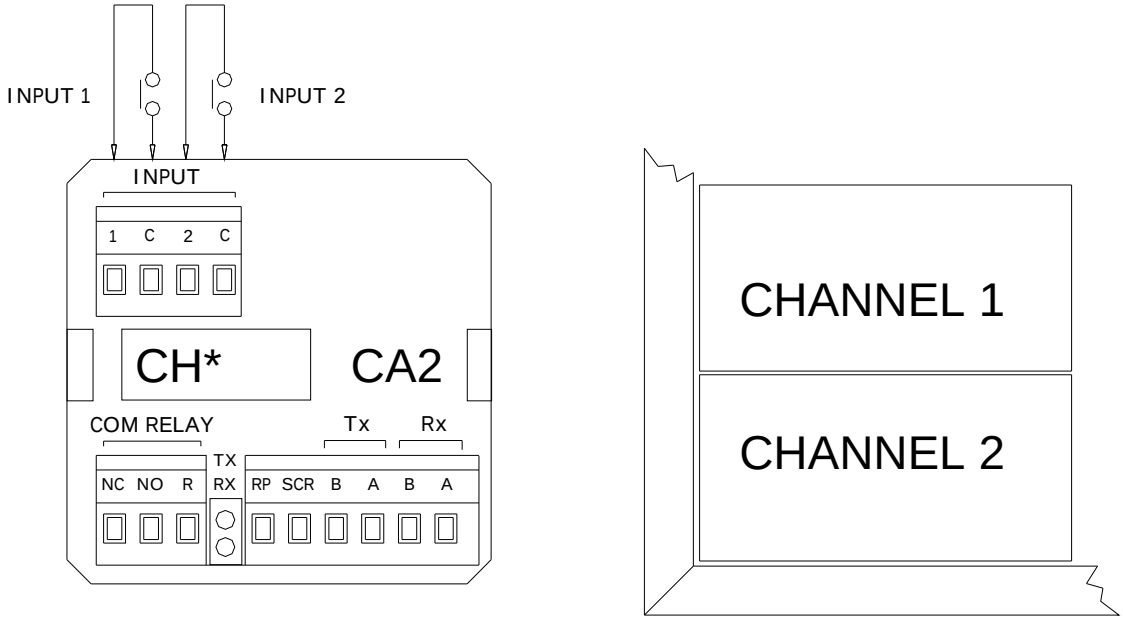

Note:- Full details of communication are provided later in the manual.

20. System Configurations and Programming

Functions

The 725 range of Alarm Annunciator is always supplied with a comprehensive range of pre-defined options which can be enabled or disabled on a channel by channel basis using the integral, (or as an option remote), pushbutton / programming module. To simplify the configuration process each option has been allocated a unique “Function No.” between 1 and 24, any combination of these functions can be selected for each alarm way but care must be taken to ensure the operating modes selected do not conflict with each other. For example if ringback alarm sequence R is required the system should also be set to manual reset for the sequence to operate correctly. The key for functions 1 to 24 is shown later in the manual.

20.1 Programming Mode

The programme function of the unit is accessed by hinging down the pushbutton / programming module using a small terminal screwdriver in the recess in the top of the bezel and levering forward the top edge of the assembly. This allows the assembly to hinge down to reveal the programming information plate. To programme the unit, first place it in the configuration mode by moving the yellow switch to the “CONF” position, the "function" display will indicate 0 to confirm that the unit can be set.

	WARNING! Installation, configuration and maintenance of this annunciator must only be performed by competent service personnel

Removal Of The Pushbutton/Programming Module

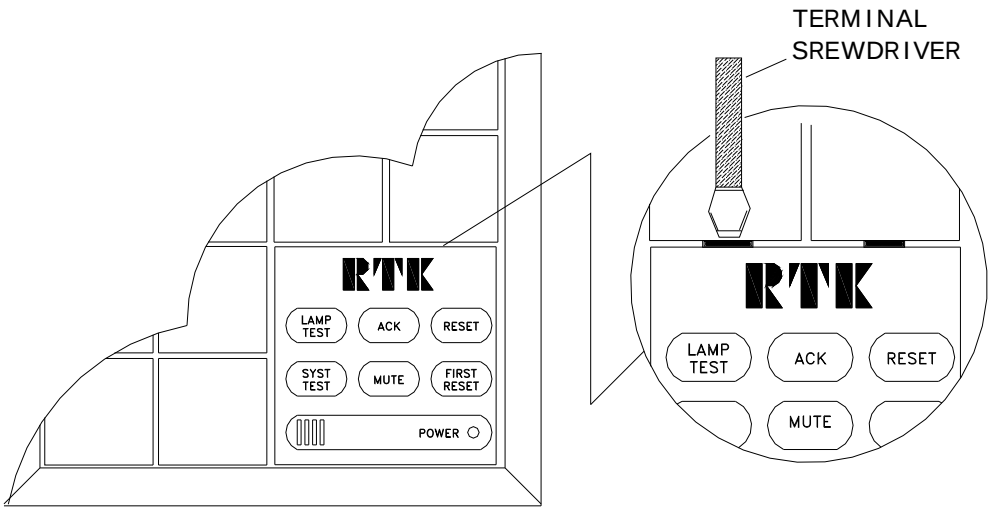

20.2 Changing A Function Setting

When the pushbutton / programming module has been hinged down and the “CONF”, “programme mode”, switch has been placed to the ON position the operation of the pushbuttons changes as indicated on the information plate on the underside of the unit as detailed below:-

Programming Information Plate Details

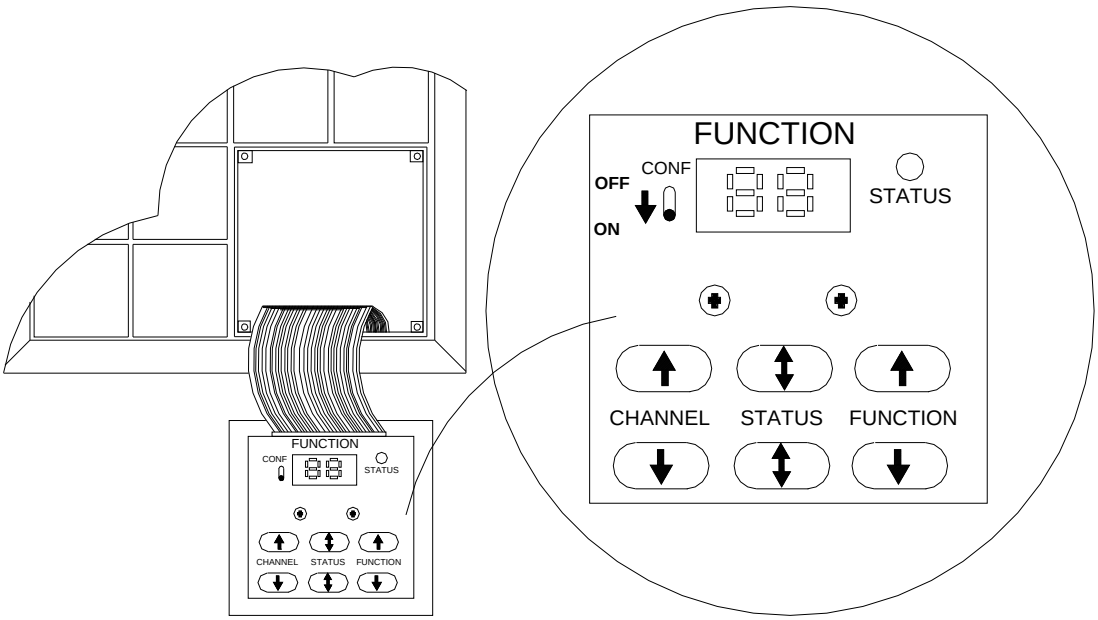

Once the unit is in the (CONF), programme mode, the window associated with the channel selected for programming will fast flash.

1. The lamp test / system test pushbuttons are used to select the required channel
2. The reset / first reset pushbuttons are used to select the required Function No.
3. The ack / mute pushbuttons are used to enable or disable the feature.

Note:- If the status LED is on the feature has been enabled.

IMPORTANT NOTE

If the user programmes a channel as detailed above and simply returns the unit to the run mode by placing the CONF switch to the off position the information will not be stored. Programme changes are only stored after the user has moved onto an adjacent channel, using the system test or lamp test pushbuttons, at that point the programmed information is stored in EEPROM on the associated alarm card

20.3 Programming Example

Example:- If channel 7 is currently set to manual reset but the user would like to change this to allow the window to automatically reset, (after acknowledge), the following procedure should be followed.

1. First hinge down the pushbutton module to access the programming plate.
2. Place the unit into (CONF), programming mode, using the yellow switch to the left of the display
3. Use first reset / reset pushbuttons to select function 3 (reset function)
4. Use the system test / lamp test pushbuttons to select channel 7 and note the associated window will fast flash.
5. Use the mute / ack pushbuttons to enable function F3 which is confirmed when the status LED is on.
6. Scroll to the next channel up or down to store the required setting using the system test / lamp test pushbuttons.
7. Return to normal operation by placing the CONF switch to the off state

20.4 Checking Programmed Settings

After all of the required functions have been set on the unit it is recommended that the user checks the configuration to avoid problems during the commissioning stage. This is a simple process that should only take a few minutes and is achieved by placing the unit into the “CONF” mode and scrolling through each channel noting that as each Function is selected the status LED is on if enabled or off if disabled. When functions such as F23 (Critical horn group HNA) are selected all windows selected to operate the relay are illuminated in a steady on state to help the user identify which alarms are within the horn group. Please note:- A window selected for programming automatically fast flashes therefore the window of the channel that is being programmed cannot be viewed to determine status information. The status LED on the information plate can be used as an alternative to view the setting for this channel, if the status LED is on the function has been enabled, or the user can move to an adjacent channel to allow the alarm window to be used in the normal way.

20.5 Systems With Unarmed Ways

Each dual alarm card in the system is provided with a unique binary address, which is set using on board DIL switches during manufacturing. If the system has been supplied with unarmed ways the address normally used for the associated channels will be reserved to allow the user to add the card at a later date. The programming module is designed to stop navigating between channels when it detects a missing card address (normally the last card in the system). When the channel navigation stops because of unarmed ways it is necessary to “jump over” the missing address to access any further channels. To “jump” an address the user needs to hold down the reset pushbutton and then press and hold the "channel up or down" pushbutton.

20.6 Points To Note When Programming

Alarm channels are always numbered in a standard format depending on window size and the channel up / down pushbuttons are used to automatically move between each channel in the correct order. The selected feature is only stored when the user selects an adjacent channel (either going up or down). After the programming is complete it is recommended that the user checks the required functions have been enabled correctly. After programming it is recommended that any channels that have been changed are tested to ensure that the operation is in line with the required functions. The programming process includes an inbuilt comprehensive error checking routine. In applications where there is extreme electrical noise this may result in the program not being accepted. If this happens, simply repeat the process for that particular alarm channel.

21. Function No Key And Descriptions

If units are supplied with unarmed alarm channels it is necessary to jump over these missing cards (addresses) to access the next channel.

General Description

The P725 is equipped with numerous pre-defined features that can be simply enabled or disabled on a per channel basis as required. Functions numbers are assigned to each feature for ease of selection.

Feature and Function Key

FEATURE	FUNCTION	STATUS LED	
		OFF	ON
Monitor current input contact state	FO	Alarm Contact Open	Alarm contact closed
Set signal contact non alarm state	F1	Normally Open	Normally closed
Set individual channel repeat Relay non alarm state	**F2**	Normally energised	Normally de-energised
Set automatic or manual Reset function	F3	Manual Reset	Automatic reset
Set fleeting alarm state	F4	Lock in	Non lock in
Set alarm to ringback sequence	F5	N/A	Ringback
Pushbutton interlock	F6	Enable	Disable
Input reflash	F7	Disable	Enable
Reflash critical group relay	F8	Disable	Enable
Reflash non critical group relay	F9	Disable	Enable
Set alarm to first up sequence F0	F10*	Disable	Enable
Set alarm to first up sequence F1	F11	Disable	Enable
Set alarm to first up sequence F2	F12	Disable	Enable
Set alarm to first up sequence F3	F13	Disable	Enable
Set alarm to be in first up group A	F14*	Disable	Enable
Set alarm to be in first up group B	F15	Disable	Enable
Set alarm to be in first up group C	F16	Disable	Enable
Set alarm to be in first up group D	F17	Disable	Enable
Set repeat relays to follow logic	**F18**	Disable	Enable
Set repeat relays to follow input	**F19**	Disable	Enable
Set repeat relays to follow lamps	**F18 & F19**	Disable	Enable
Repeat relays inhibited on test	F20	Disable	Enable
Set alarm to critical group relay	F21*	Disable	Enable
Set alarm to non critical group relay	F22*	Disable	Enable
Set alarm to critical horn relay	F23*	Disable	Enable
Set alarm to non critical horn relay	F24*	Disable	Enable

Note 1:- The Functions marked with the * are the default settings if no programming is requested with the order

Note 2:- Functions F2, F18 & F19 are only available if individual channel repeat relays are fitted (Option RLY).

22. Function Descriptions

Function Numbers are used to describe pre-defined features that can be enabled or disabled by the Customer as required.

F0- Contact Status

Function F0 allows each window in the annunciator to be illuminated if the associated signal contact is in the closed state. This is normally used to help the user identify the current state of the input device from the front of the unit without disturbing plant wiring.

F1- normally open (N/O) or normally closed (N/C) signal input contact

Each alarm input can be configured to allow operation from a N/O or N/C field contact.

FEATURE-F1	STATUS LED
Set channel to operate from a normally open signal input contact	OFF
Set channel to operate from normally closed signal input contact	ON

Please note: When using Option AD (Customer Adjustable Response Time) on P725 Annunciators shipped after March 2009 "F1" should be set to OFF and Switch SW2 located on each (2) channel alarm card should be used to set the input state to normally open or normally closed as described in Section 24 of this manual.*

F2- Individual Channel Output Relay State

This feature is only available if individual channel repeat relays, option RLY, are fitted to the annunciator.

FEATURE-F2	STATUS LED
Set individual channel repeat relay to be normally energised in non alarm state	OFF
Set individual channel repeat relay to be normally de-energised in non alarm state	ON

F3- Manual Or Automatic Reset

Acknowledged alarms can be set to manual reset where the operator must press the reset pushbutton to clear the alarm after the input has returned to normal or acknowledged alarms can be set to automatic reset which allows the alarm to automatically clear as soon as the input returns to normal.

FEATURE-F3	STATUS LED
Set channel to manual reset	OFF
Set channel to automatic reset	ON

F4- Lock-In Or Non-Lock-In Operation

Alarms that occur and return to normal can be set to lock-in where the alarm is maintained until acknowledge and reset has been pressed. (Depending upon sequence selected) or alarms that occur and return to normal can be set to non-lock-in which allows the alarm to automatically return to the off state as soon as the input returns to normal.

FEATURE-F4	STATUS LED
Set channel to lock-in	OFF
Set channel to non-lock-in	ON

F5- Ringback Sequence

Ringback sequence is used to inform the operator that an acknowledged alarm has returned to normal. When an acknowledged alarm returns to normal the associated window will slow flash to indicate to the operator that the alarm can be reset.

FEATURE-F5	STATUS LED
Set channel to ringback not required	OFF
Set channel to ringback sequence	ON

Please note:- Function F3, F4 must be set to the off state for ringback sequence to function correctly. As an option a unique sounding ringback audible can be wired to the unit, which will provide audible notification that the alarm can be reset. The ringback audible feature is described later in the manual

F6- Reset Pushbutton Optional Function

If required the reset pushbutton can be used for both acknowledge and reset.

FEATURE-F6	STATUS LED
Set channel to allow acknowledge & reset pushbuttons to operate independently	OFF
Set channel to allow the reset pushbutton to be used for acknowledge & reset	ON

F7- Input Reflash (Re-Alarm)

On Manual Reset Sequences Input reflash is used to inform the operator that an acknowledged alarm waiting to be Reset has returned to normal and re-alarmed.

FEATURE-F7	STATUS LED
Set Channel To Disable Input Reflash	OFF
Set Channel To Enable Input Reflash	ON

F8- Critical Group Relay Reflash Function

Group relays are typically used to inform third party devices that there is an alarm within a local panel, however in the standard mode additional alarms occurring within the same group will not change the state of the relay if one alarm remains active. The reflash function allows the relay to change state for 0.5 seconds every time a new alarm occurs within the same group.

FEATURE-F8	STATUS LED
Set channel to disable reflash function on critical group relay	OFF
Set channel to enable reflash function on critical group relay	ON

Please note:- Only alarms with function F21 set to on will activate the critical group relay.

F9- Non-Critical Group Relay Reflash Function

Group relays are typically used to inform third party devices that there is an alarm within a local panel, however in the standard mode additional alarms occurring within the same group will not change the state of the relay if one alarm remains active. The reflash function allows the relay to change state for 0.5 seconds every time a new alarm occurs within the same group.

FEATURE-F9	STATUS LED
Set channel to disable reflash function on non-critical group relay	OFF
Set channel to enable reflash function on non-critical group relay	ON

Please note:- Only alarms with function F22 set to on will activate the non critical group relay.

F10- First-Up Sequence FO Or Enable Slow Flash On Non-First Out Sequences

This feature is used to enable first-up sequence FO on individual channels as required. Full sequence tables are provided in Section 10

FEATURE-F10	STATUS LED
Set channel to first-up sequence FO not required	OFF
Set channel to first-up sequence FO required	ON

Please note:- F10 is used to enable slow flash for non first up sequences.

F11- First-Up Sequence F1

This feature is used to enable first-up sequence F1 on individual channels as required. Full sequence tables are provided in Section 10

FEATURE-F11	STATUS LED
Set channel to first-up sequence F1 not required	OFF
Set channel to first-up sequence F1 required	ON

F12- First-Up Sequence F2

This feature is used to enable First-Up sequence F2 on individual channels as required. Full sequence tables are provided in Section 10

FEATURE-F12	STATUS LED
Set channel to first-up sequence F2 not required	OFF
Set channel to first-up sequence F2 required	ON

F13- First-Up Sequence F3 Or Enable Fast Flash On Non-First Out Sequences

This feature is used to enable first-up sequence F3 on individual channels as required. Full sequence tables are provided in Section 10

FEATURE-F13	STATUS LED
Set channel to first-up sequence F3 not required	OFF
Set channel to first-up sequence F3 required	ON

Please note:- F13 is used to enable fast flash for non first out sequences

F14 - First-Up Group A

All alarms set to function F14 will operate as a single first-up group in accordance with the selected first-up sequence. F14 is the function code allocated for first-up Group A.

FEATURE-F14	STATUS LED
Set to remove channel from first-up Group A	OFF
Set to include channel in first-up Group A	ON

F15 - First-Up Group B

All alarms set to function F15 will operate as a single first-up group in accordance with the selected first-up sequence. F15 is the function code allocated for first-up Group B.

FEATURE-F15	**STATUS LED**
Set to remove channel from first-up Group B	OFF
Set to include channel in first-up Group B	ON

F16 - First-Up Group C (Four First-up Group version only)

All alarms set to function F16 will operate as a single first-up group in accordance with the selected first-up sequence. F16 is the function code allocated for first-up Group C.

FEATURE-F16 (FOUR FIRST-UP GROUP VERSION ONLY)	STATUS LED
Set to remove channel from first-up Group C	OFF
Set to include channel in first-up Group C	ON

F16 – Alarm Input Selection (Standard version)

On standard units that have the communications capability enabled there are only two first-up groups A and B. On these units Function 16 is used to configure how the communications operate.
With the communications option fitted it is possible to receive alarms in the normal way, from volt-free contacts, or via the serial communications port. This function is used to select where the system is looking to receive this alarm information. If the function is not selected then the normal volt-free contacts are used. If the function is selected then the serial communications port will be monitored for details of alarm status. It is possible to set this feature on an individual channel basis hence having some alarm channels monitoring volt-free contacts and some monitoring the communications.

FEATURE-F16 (STANDARD VERSION)	STATUS LED
Set to get alarm information from volt-free contact input	OFF
Set to get alarm information from the serial communications	ON

F17 - First-up Group D (Four First-up Group version only)

All alarms set to function F17 will operate as a single first-up group in accordance with the selected first-up sequence. F17 is the function code allocated for first-up Group D.

FEATURE-F17 (FOUR FIRST-UP GROUP VERSION ONLY)	STATUS LED
Set to remove channel from first-up Group D	OFF
Set to include channel in first-up Group D	ON

F17 – Alarm Logic Selection (Standard version)

On standard units that have the communications capability enabled there are only two first-up groups A and B. On these units Function 17 is used to configure how the communications operate.
In most situations the control of the logic functions of the annunciator are done locally but in some cases this would be done remotely. The 725 range of Annunciator would simply operate as a dumb display indicating and flashing in a manner defined by some external equipment. The external equipment would monitor the alarm points, define which is first-up, which is acknowledged and reset etc. This function is selected if it required to have the annunciator logic remote from the P725. More details on this feature are provided in the section on Serial Communications

FEATURE-F17 (STANDARD VERSION)	STATUS LED
Set For Annunciator Logic To Be Locally Controlled	OFF
Set For Annunciator Logic To Be Remote From The P725	ON

F18- Individual Channel Repeat Relay (Follows Alarm Logic)

A relay set to function F18 will activate on alarm and remain in the alarm state until the alarm has returned to normal and the associated pushbuttons have been pressed. Please note:- The individual relay is activated by the alarm logic or when system test is pressed (See function F20).

FEATURE-F18	STATUS LED
Set Channel To Off If This Feature Is Not Required	OFF
Set Channel To Repeat Relay Follows Alarm Logic	ON

F19- Individual Channel Repeat Relay (Follows Signal Input)

A relay set to function F19 will activate when the signal input is in the alarm state and will automatically return to normal when the signal input returns to normal. Please note:- The individual relay is only activated by its signal input and never operates as a result of lamp or system test only

FEATURE-F19	STATUS LED
Set Channel To Off If This Feature Is Not Required	OFF
Set Channel To Repeat Relay Follows Signal Input	ON

F18 And 19- Individual Channel Repeat Relay (Follows Display)

A relay set to both function F18 and F19 will follow the alarm display. Please note:- The individual relay operates as a slave of the lamp output signal and when system test or lamp test is pressed. (The relay cannot be prevented from operating when lamp or system test are pressed (See function F20).

FEATURE-F18 AND F19	STATUS LED
Set Channel To Off If This Feature Is Not Required	OFF
Set Channel To Repeat Relay Follows Display	ON

F20- Inhibit Group Repeat Relays On System Test

If any channel in the system has been assigned to either the GPA or GPB relays using function F21 or F22 and system test is pressed the group relays will activate. However if function F20 is enabled the GPA and GPB relays cannot be triggered by system test.

FEATURE-F20	STATUS LED
Set Channel To Operate The GPA & GPB Relays On System Test	OFF
Set Channel To Inhibit The GPA & GPB Relays On System Test	ON

F21- Critical Group Relay (GPA)

Each channel can be set to operate the critical group relay using function F21. When set the alarm channel will activate the group relay when an alarm occurs and the relay will remain active until the alarm has returned to normal and the channel has been acknowledged and reset.

FEATURE-F21	STATUS LED
Remove channel from the critical group relay	OFF
Set channel to operate the critical group relay	ON

F22- Non-Critical Group Relay (GPB)

Each channel can be set to operate the non-critical group relay using function F22. When set the alarm channel will activate the group relay when an alarm occurs and relay will remain active until the alarm has returned to normal and the channel has been acknowledged and reset.

FEATURE-F22	STATUS LED
Remove channel from the non-critical group relay	OFF
Set channel to operate the non-critical group relay	ON

F23- Critical Audible Relay (HNA)

Each channel can be set to operate the critical horn relay using function F23. When set the alarm channel will activate the horn relay when an alarm occurs and the relay will remain active until the mute or acknowledge pushbutton has been pressed.

FEATURE-F23	STATUS LED
Remove channel from the critical horn relay group	OFF
Set channel to operate the critical horn relay	ON

F24- Non-Critical Audible Relay (HNB)

Each channel can be set to operate the non-critical horn relay using function F24.
When set the alarm channel will activate the horn relay when an alarm occurs and the relay will remain active until the mute or acknowledge pushbutton has been pressed.

FEATURE-F24	STATUS LED
Remove channel from the non-critical horn relay group	OFF
Set channel to operate the non-critical horn relay	ON

23. Alarm Card Address Settings

Dual Channel Alarm Card Address And Output Drive Type Settings

Before each card is placed within the annunciator a unique address No. has to be set using the switches located on DIL switch SW1, which allows the programming module to communicate and pass programming instructions to and from the associated alarm channels. When replacing an alarm card the switches on DIL Switch SW1 must be set to match the card that is being removed.

WARNING!

Remove **ALL** power from the unit and fully remove the card before changing any jumpers or switches

SW1-*	FUNCTION	ON	OFF
SW1-1	Set address Bit 1	1	0
SW1-2	Set address Bit 2	1	0
SW1-3	Set address Bit 3	1	0
SW1-4	Set address Bit 4	1	0
SW1-5	Set address Bit 5	1	0
SW1-6	Set address Bit 6	1	0
SW1-7	Set address Bit 7	1	0

23.1 Set Output Drive To Operate With Lamps or LED

SW1-8	Conventional filament lamps	SW1-8	ON
	Fit & forget LED assemblies	SW1-8	OFF

Alarm Card DIL Switch SW1 Location

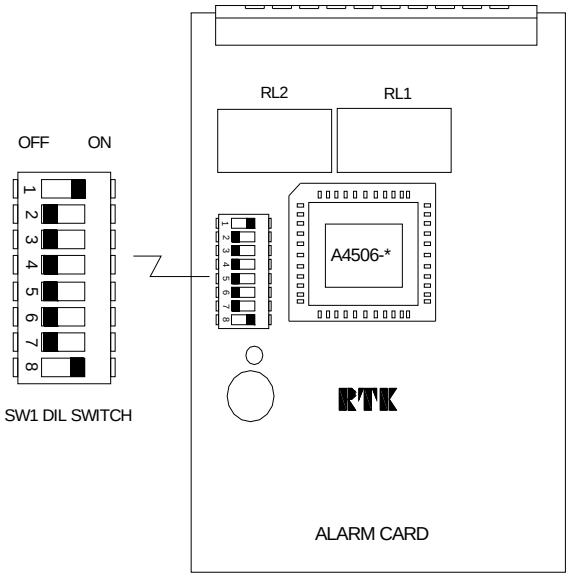

23.2 Alarm Card DIL Switch SW1 Address Settings

ADDRESS		64	32	16	8	4	2	1
NO.	BINARY	SW1-7	SW1-6	SW1-5	SW1-4	SW1-3	SW1-2	SW1-1
0	0000000	OFF	OFF	OFF	OFF	OFF	OFF	OFF
1	0000001	OFF	OFF	OFF	OFF	OFF	OFF	ON
2	0000010	OFF	OFF	OFF	OFF	OFF	ON	OFF
3	0000011	OFF	OFF	OFF	OFF	OFF	ON	ON
4	0000100	OFF	OFF	OFF	OFF	ON	OFF	OFF
5	0000101	OFF	OFF	OFF	OFF	ON	OFF	ON
6	0000110	OFF	OFF	OFF	OFF	ON	ON	OFF
7	0000111	OFF	OFF	OFF	OFF	ON	ON	ON
8	0001000	OFF	OFF	OFF	ON	OFF	OFF	OFF
9	0001001	OFF	OFF	OFF	ON	OFF	OFF	ON
10	0001010	OFF	OFF	OFF	ON	OFF	ON	OFF
11	0001011	OFF	OFF	OFF	ON	OFF	ON	ON
12	0001100	OFF	OFF	OFF	ON	ON	OFF	OFF
13	0001101	OFF	OFF	OFF	ON	ON	OFF	ON
14	0001110	OFF	OFF	OFF	ON	ON	ON	OFF
15	0001111	OFF	OFF	OFF	ON	ON	ON	ON
16	0010000	OFF	OFF	ON	OFF	OFF	OFF	OFF
17	0010001	OFF	OFF	ON	OFF	OFF	OFF	ON
18	0010010	OFF	OFF	ON	OFF	OFF	ON	OFF
19	0010011	OFF	OFF	ON	OFF	OFF	ON	ON
20	0010100	OFF	OFF	ON	OFF	ON	OFF	OFF
21	0010101	OFF	OFF	ON	OFF	ON	OFF	ON
22	0010110	OFF	OFF	ON	OFF	ON	ON	OFF
23	0010111	OFF	OFF	ON	OFF	ON	ON	ON
24	0011000	OFF	OFF	ON	ON	OFF	OFF	OFF
25	0011001	OFF	OFF	ON	ON	OFF	OFF	ON
26	0011010	OFF	OFF	ON	ON	OFF	ON	OFF
27	0011011	OFF	OFF	ON	ON	OFF	ON	ON
28	0011100	OFF	OFF	ON	ON	ON	OFF	OFF
29	0011101	OFF	OFF	ON	ON	ON	OFF	ON
30	0011110	OFF	OFF	ON	ON	ON	ON	OFF
31	0011111	OFF	OFF	ON	ON	ON	ON	ON
32	0100000	OFF	ON	OFF	OFF	OFF	OFF	OFF
33	0100001	OFF	ON	OFF	OFF	OFF	OFF	ON
34	0100010	OFF	ON	OFF	OFF	OFF	ON	OFF
35	0100011	OFF	ON	OFF	OFF	OFF	ON	ON
36	0100100	OFF	ON	OFF	OFF	ON	OFF	OFF
37	0100101	OFF	ON	OFF	OFF	ON	OFF	ON
38	0100110	OFF	ON	OFF	OFF	ON	ON	OFF
39	0100111	OFF	ON	OFF	OFF	ON	ON	ON
40	0101000	OFF	ON	OFF	ON	OFF	OFF	OFF

Alarm Card DIL Switch SW1 Address Settings 41 To 80

ADDRESS		64	32	16	8	4	2	1
NO.	BINARY	SW1-7	SW1-6	SW1-5	SW1-4	SW1-3	SW1-2	SW1-1
41	0101001	OFF	ON	OFF	ON	OFF	OFF	ON
42	0101010	OFF	ON	OFF	ON	OFF	ON	OFF
43	0101011	OFF	ON	OFF	ON	OFF	ON	ON
44	0101100	OFF	ON	OFF	ON	ON	OFF	OFF
45	0101101	OFF	ON	OFF	ON	ON	OFF	ON
46	0101110	OFF	ON	OFF	ON	ON	ON	OFF
47	0101111	OFF	ON	OFF	ON	ON	ON	ON
48	0110000	OFF	ON	ON	OFF	OFF	OFF	OFF
49	0110001	OFF	ON	ON	OFF	OFF	OFF	ON
50	0110010	OFF	ON	ON	OFF	OFF	ON	OFF
51	0110011	OFF	ON	ON	OFF	OFF	ON	ON
52	0110100	OFF	ON	ON	OFF	ON	OFF	OFF
53	0110101	OFF	ON	ON	OFF	ON	OFF	ON
54	0110110	OFF	ON	ON	OFF	ON	ON	OFF
55	0110111	OFF	ON	ON	OFF	ON	ON	ON
56	0111000	OFF	ON	ON	ON	OFF	OFF	OFF
57	0111001	OFF	ON	ON	ON	OFF	OFF	ON
58	0111010	OFF	ON	ON	ON	OFF	ON	OFF
59	0111011	OFF	ON	ON	ON	OFF	ON	ON
60	0111100	OFF	ON	ON	ON	ON	OFF	OFF
61	0111101	OFF	ON	ON	ON	ON	OFF	ON
62	0111110	OFF	ON	ON	ON	ON	ON	OFF
63	0111011	OFF	ON	ON	ON	OFF	ON	ON
64	1000000	ON	OFF	OFF	OFF	OFF	OFF	OFF
65	1000001	ON	OFF	OFF	OFF	OFF	OFF	ON
66	1000010	ON	OFF	OFF	OFF	OFF	ON	OFF
67	1000011	ON	OFF	OFF	OFF	OFF	ON	ON
68	1000100	ON	OFF	OFF	OFF	ON	OFF	OFF
69	1000101	ON	OFF	OFF	OFF	ON	OFF	ON
70	1000110	ON	OFF	OFF	OFF	ON	ON	OFF
71	1000111	ON	OFF	OFF	OFF	ON	ON	ON
72	1001000	ON	OFF	OFF	ON	OFF	OFF	OFF
73	1001001	ON	OFF	OFF	ON	OFF	OFF	ON
74	1001010	ON	OFF	OFF	ON	OFF	ON	OFF
75	1001011	ON	OFF	OFF	ON	OFF	ON	ON
76	1001100	ON	OFF	OFF	ON	ON	OFF	OFF
77	1001101	ON	OFF	OFF	ON	ON	OFF	ON
78	1001110	ON	OFF	OFF	ON	ON	ON	OFF
79	1001111	ON	OFF	OFF	ON	ON	ON	ON
80	1010000	ON	OFF	ON	OFF	OFF	OFF	OFF

Alarm Card DIL Switch SW1 Address Settings 81 To 120

ADDRESS		64	32	16	8	4	2	1
NO.	BINARY	SW1-7	SW1-6	SW1-5	SW1-4	SW1-3	SW1-2	SW1-1
81	1010001	ON	OFF	ON	OFF	OFF	OFF	ON
82	1010010	ON	OFF	ON	OFF	OFF	ON	OFF
83	1010011	ON	OFF	ON	OFF	OFF	ON	ON
84	1010100	ON	OFF	ON	OFF	ON	OFF	OFF
85	1010101	ON	OFF	ON	OFF	ON	OFF	ON
86	1010110	ON	OFF	ON	OFF	ON	ON	OFF
87	1010111	ON	OFF	ON	OFF	ON	ON	ON
88	1011000	ON	OFF	ON	ON	OFF	OFF	OFF
89	1011001	ON	OFF	ON	ON	OFF	OFF	ON
90	1011010	ON	OFF	ON	ON	OFF	ON	OFF
91	1011011	ON	OFF	ON	ON	OFF	ON	ON
92	1011100	ON	OFF	ON	ON	ON	OFF	OFF
93	1011101	ON	OFF	ON	ON	ON	OFF	ON
94	1011110	ON	OFF	ON	ON	ON	ON	OFF
95	1011111	ON	OFF	ON	ON	ON	ON	ON
96	1100000	ON	ON	OFF	OFF	OFF	OFF	OFF
97	1100001	ON	ON	OFF	OFF	OFF	OFF	ON
98	1100010	ON	ON	OFF	OFF	OFF	ON	OFF
99	1100011	ON	ON	OFF	OFF	OFF	ON	ON
100	1100100	ON	ON	OFF	OFF	ON	OFF	OFF
101	1100101	ON	ON	OFF	OFF	ON	OFF	ON
102	1100110	ON	ON	OFF	OFF	ON	ON	OFF
103	1100111	ON	ON	OFF	OFF	ON	ON	ON
104	1101000	ON	ON	OFF	ON	OFF	OFF	OFF
105	1101001	ON	ON	OFF	ON	OFF	OFF	ON
106	1101010	ON	ON	OFF	ON	OFF	ON	OFF
107	1101011	ON	ON	OFF	ON	OFF	ON	ON
108	1101100	ON	ON	OFF	ON	OFF	OFF	OFF
109	1101101	ON	ON	OFF	ON	ON	OFF	ON
110	1101110	ON	ON	OFF	ON	ON	ON	OFF
111	1101111	ON	ON	OFF	ON	ON	ON	ON
112	1110000	ON	ON	ON	OFF	OFF	OFF	OFF
113	1110001	ON	ON	ON	OFF	OFF	OFF	ON
114	1110010	ON	ON	ON	OFF	OFF	ON	OFF
115	1110011	ON	ON	ON	OFF	OFF	ON	ON
116	1110100	ON	ON	OFF	ON	OFF	OFF	OFF
117	1110101	ON	ON	ON	OFF	ON	OFF	ON
118	1110110	ON	ON	ON	OFF	ON	ON	OFF
119	1110111	ON	ON	ON	OFF	ON	ON	ON
120	1111000	ON	ON	ON	ON	OFF	OFF	OFF

Alarm Card DIL Switch SW1 Address Settings 121 To 127

ADDRESS		64	32	16	8	4	2	1
NO.	BINARY	SW1-7	SW1-6	SW1-5	SW1-4	SW1-3	SW1-2	SW1-1
121	1111001	ON	ON	ON	ON	OFF	OFF	ON
122	1111010	ON	ON	ON	ON	OFF	ON	OFF
123	1111011	ON	ON	ON	ON	OFF	ON	ON
124	1111100	ON	ON	ON	ON	ON	OFF	OFF
125	1111101	ON	ON	ON	ON	ON	OFF	ON
126	1111110	ON	ON	ON	ON	ON	ON	OFF
127	1111111	ON	ON	ON	ON	ON	ON	ON

24. Customer Adjustable Response Times

If specified at the time of ordering each (2) channel alarm card can be supplied with **one** of the following options, which provide Customer adjustable response times using single-turn potentiometers on each input.

Option AD1 = Provides 5mS – 50mS

Option AD2 = Provides 20mS - 2 Seconds

Option AD3 = Provides 5mS – 5 Seconds (Applies to versions supplied prior to July 2009)

Option AD1-3 = Provides 5mS – 60 Seconds (Applies to versions supplied after Nov 2012)

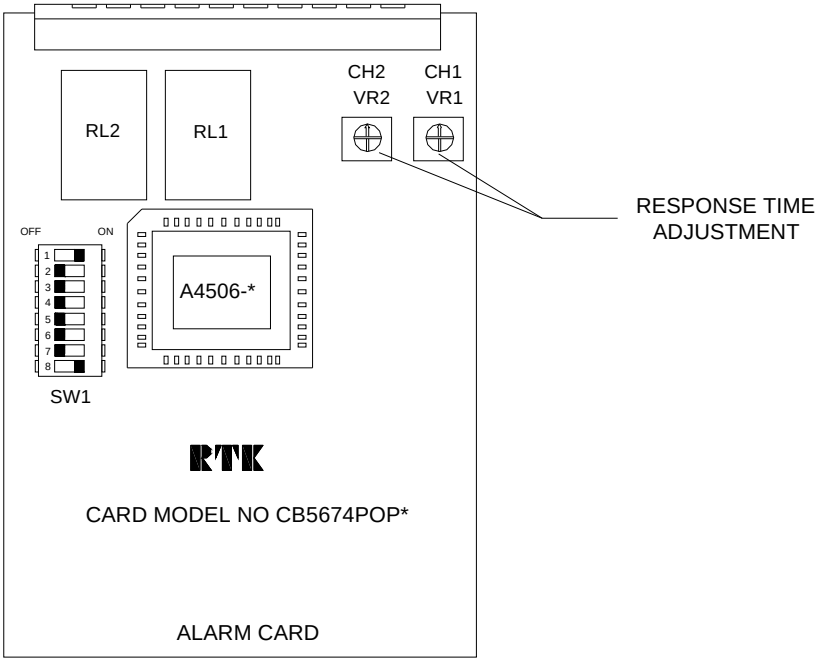

⚠	**WARNING!** Remove **ALL** power from the unit and fully remove the card before changing any jumpers or switches

To access the individual alarm card the customer terminals can be un-plugged and the plastic cover plate on the rear of the associated cell can be removed using a screwdriver to release the lock-in tabs on either side of the cover.

Once the cover has been removed the alarm card can be removed to allow adjustments to be made to VR1 (Channel 1) and VR2 (Channel 2) as required.

Turning the trim pot in a clockwise direction increases the response time.

Option AD3 = Pre-selected Delay Times - 5ms : 10ms : 25ms : 200ms : 5 seconds (Prior to Nov 2012)

Alarm cards with AD3 option are supplied daughter board (CB9300) fitted, to allow selection of the pre defined response time.

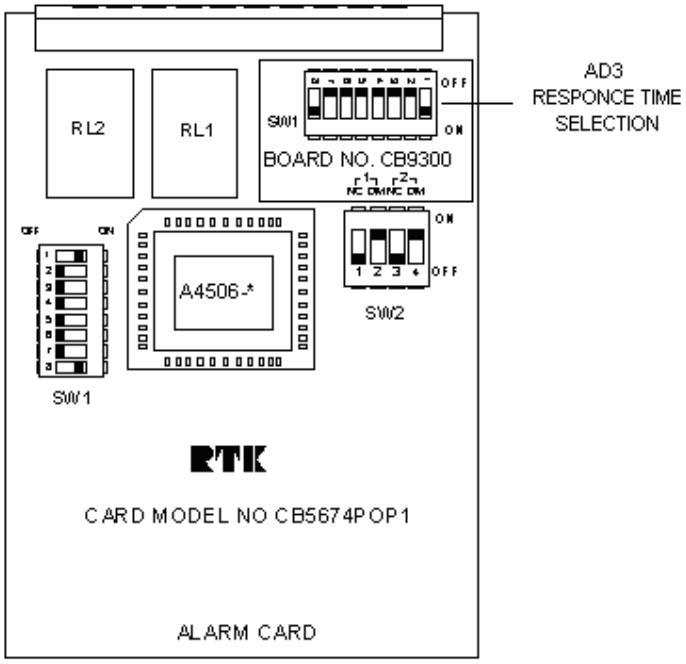

CB9300 SW1 Settings

Channel	Switch SW1	Response Time Delay (ms)				
		5	10	25	200	5000
CH1	1	ON				
	2		ON			
	3			ON		
	4				ON	
CH2	5	ON				
	6		ON			
	7			ON		
	8				ON	

Space = switch off.

NOTE

- Only one switch per channel should be set at any one time.
- 5 second delay response time is obtained by setting all switches associated with that channel to off position

Return to Normal Delay Period

In standard applications any delay period set for alarm initiation is also applied to the return to normal state.

For example if a 5 seconds delay is set, the alarm will not activate until the input has been in the abnormal state for a minimum of 5 seconds.

If the alarm returns to normal the same delay period of 5 seconds will apply before the alarm state returns to normal.

In some applications Customers prefer the alarm to have a delay before the alarm activates but as soon as the input returns to normal they require the alarm to return to the non alarm condition.

Disabling the Return to Normal Delay Period

When using AD2 or AD3 options, on P725 Annunciators supplied ***after March 2009*** Switch SW2 was added to each (2) channel alarm card which allows the user to remove the return to normal delay if required.

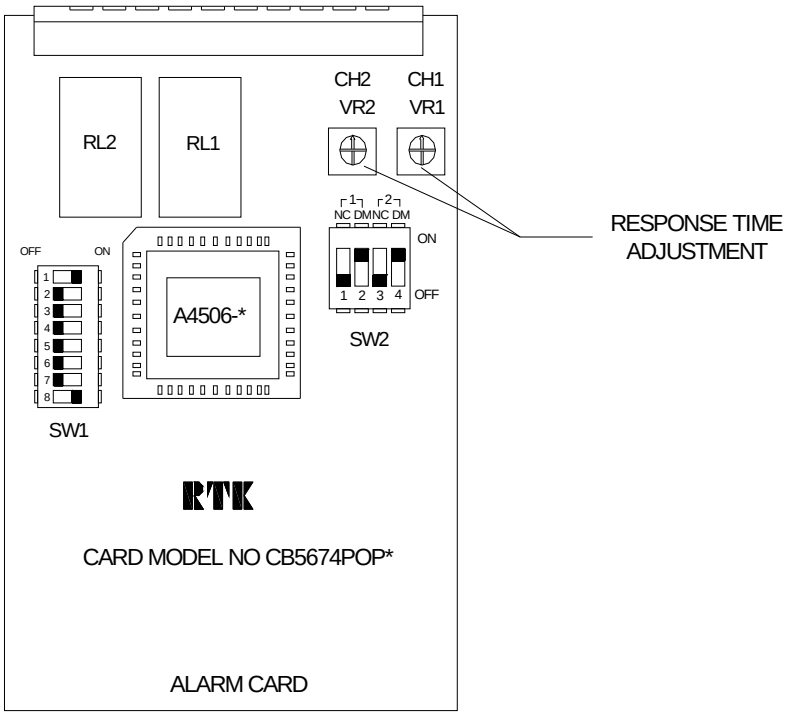

Switch SW2 is used to set:-

- SW2 – 1 & 3 are used to set the input state to Normally Open or Normally Closed
- SW2 – 2 & 4 are used to set the Delay Mode
- The Delay Mode can be set, (OFF position), to provide the same delay period for the initiation and return to normal states or
- The Delay Mode can be set, (ON position), to remove the delay on the return to normal state

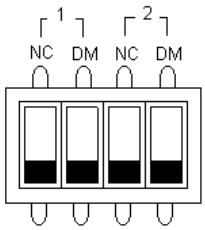

SW2

1 2 3 4

When using AD* options, on P725 Annunciator supplied after March 2009 Switch SW2 is available on each (2) channel alarm card to allow the user to set the input state to normally open or normally closed and to set the return to normal delay period.

Input State
SW2 positions 1 and 3 on each (2) channel alarm card allow the user to set the input state as follows:-

- SW2-1 – ON = Channel 1 set to Normally Closed
- SW2-1 – OFF = Channel 1 set to Normally Open
- SW2-3 – ON = Channel 2 set to Normally Closed
- SW2-3 – OFF = Channel 2 set to Normally Open

IMPORTANT NOTE
Please ensure Function F1 is set to OFF state on all channels or settings will be overwritten.

Return to Normal Delay (Delay Mode)
When using AD* options, on P725 Annunciators supplied after March 2009 SW2 positions 2 and 4 allow the Customer to select if they require the return to normal to have the same delay period as alarm activation or if the require the alarm to return to the normal state as soon as the input contact returns to normal.

- SW2-2 – ON = Channel 1 will return to normal as soon as the Input returns to normal
- SW2-2 – OFF = Channel 1 will have the same return delay period as the activation delay
- SW2-4 – ON = Channel 2 will return to normal as soon as the Input returns to normal
- SW2-4 – OFF = Channel 2 will have the same return delay period as the activation delay

NOTE
Delay Mode and Invert Input switches are not fitted for AD1 option.

Option AD3 = Pre-selected Delay Times - 5ms : 10ms : 25ms : 50mS: 200ms : 2S: 5S: 60S (Annunciators Supplied After Nov 2012)

Alarm cards with AD3 option supplied after Nov 2012 use an alternative board layout as shown below

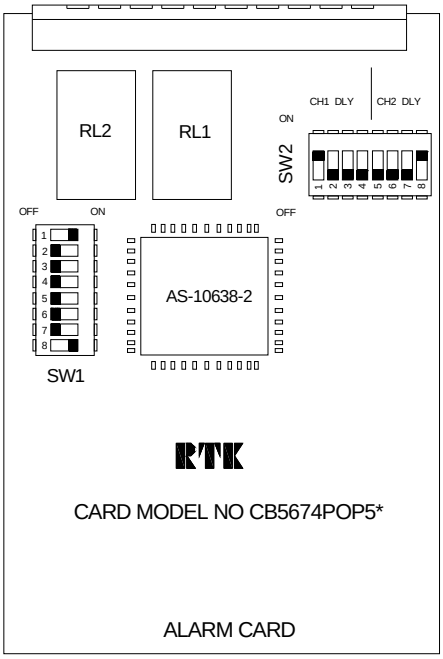

Channel	Switch SW2	Response Time Delay							
		5mS	10mS	25mS	50mS	200mS	2S	5S	60S
CH1	1		ON		ON		ON		ON
	2			ON	ON			ON	ON
	3					ON	ON	ON	ON
	4	ON = 5mS Return to Normal (RTN) ..... OFF = RTN same as activation delay							
CH2	5		ON		ON		ON		ON
	6			ON	ON			ON	ON
	7					ON	ON	ON	ON
	8	ON = 5mS Return to Normal (RTN) ..... OFF = RTN same as activation delay							

25. Systems with Serial Communication

Introduction

As an option the annunciator can be supplied with an internal serial communications card which is switch selectable to use modbus ASCII or modbus RTU protocol . This allows the annunciator to interface to 3rd party devices such as PLC's, DCS, industrial computers, SCADA packages etc. The annunciator is RS485 / RS422 compatible and can easily be converted to RS232 using a suitable external converter. As standard the annunciator acts as a 'slave' device, but can be configured to act as master when communicating to slave P725 annunciators.

Bi-Directional Communications

The bi-directional communications card allows the unit to read and write data to each alarm window, which provides contact status, window illumination control/status, and pushbutton information. Each channel within the annunciator can be set to alarm from a hard wired signal input or via the serial communications as required.

Configuration

The baud rate, parity and protocol are selected by changing DIL switch settings on the communications card as described later in this section.

Address Selection

Each annunciator is set with a unique address from 0 to 63, which allows up to 64 separate annunciators to be connected in a single RS485 multi-drop loop. We can also supply comprehensive alarm monitoring and logging software if required.

Character Format

ASCII 7 data, 1 start, 1 stop, 1 parity
RTU 8 data, 1 start, 1 stop, 1 parity

Message Format

In accordance with the standard modbus protocols, all data exchanges are assumed to comply strictly with these standards. ASCII transmissions will start with a colon and end with longitudinal redundancy check (LRC), carriage return and line feed. RTU transmissions will not use framing characters and will incorporate a cyclic redundancy check (CRC).
For further details please refer to the "Modicon modbus protocol reference guide” available from Modbus-IDA www.modbus.org

Fault Indication

If communications cannot be established within a specified time-out period (typically 10 seconds) then the watchdog relay on the communications card will trip and, if fitted, the "communications fault" window will illuminate. This indicates there is a communications fault either with the external device or with the integral alarm cards within the annunciator. Because the system continually attempts to regain communications it will self-recover as soon as communication is re-established.

P725 to P725 Connections

For applications where local and remote annunciators are required two or more P725 annunciators can be interconnected. In the normal situation one of the annunciators will monitor the standard volt-free alarm contacts or voltage inputs and indicate the alarms as normal. This alarm information is then transmitted on the serial communications to another P725 annunciator using either two or four wires for the communications. These systems are interconnected as shown later in this section.

System 9000TS To P725 Annunciator

The System9000TS Annunciator from Eaton's MTL product line can also be used as described above to monitor a number of alarm contacts and transmit the information via the serial communications to a remote P725 annunciator. The System9000TS can optionally have a display to indicate alarm information or simply operate as a data gathering and transmission device. Please refer to our sales office for further information on these systems.

Modbus Communications

Full details on how to use modbus ASCII and modbus RTU protocols are not given within this manual as they are well covered by more specialised manuals. A brief overview of the main features is shown below.

Modbus Function Codes

The function code field tells the addressed 'slaves' what function to perform. The only relevant function codes when communicating to the P725 annunciator are as follows:-

03	Read register	This reads 16 bit data registers containing alarm information
06	Write register	Writes data to 16 bit register. This data request can be used as an alternative alarm input source.

Error Check

The error check is either LRC (Longitudinal redundancy check) or CRC (Cyclic redundancy check) depending on whether ASCII or RTU modbus is selected.

Software

Eaton can supply comprehensive monitoring software for use with the 725 range of alarm annunciator. This can be configured as an alarm/event management system with user generated custom displays to monitor plant wide system operation.

26. Serial Communication Card

The 725 range of Alarm Annunciator can be fitted with a serial communications card, which will provide an RS485 port to connect to external equipment.

A number of features on this card are DIL- switch selectable as described in the following section.

Position Of DIL Switches On Communications Card

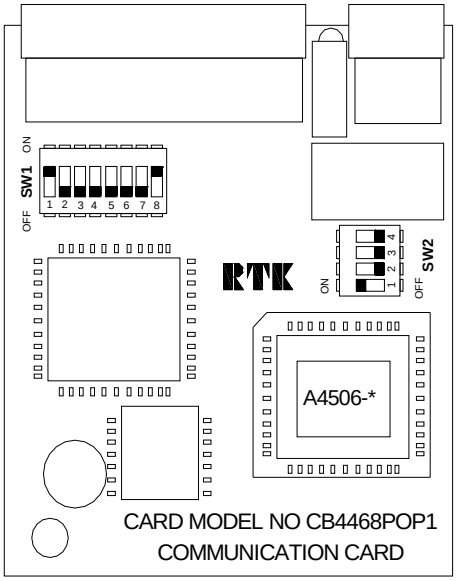

	WARNING! Remove **ALL** power from the unit and fully remove the card before changing any jumpers or switches

Switch SW1 Functions

SW1-*	FUNCTION	ON	OFF
SW1-1	Address bit 1	1	0
SW1-2	Address bit 2	1	0
SW1-3	Address bit 3	1	0
SW1-4	Address bit 4	1	0
SW1-5	Address bit 5	1	0
SW1-6	Address bit 6	1	0
SW1-7	Enable Remote Serial PB Control	ON	
SW1-8	Enable outputs for bulb drive	ON	

Serial Interface Card Address selection

Each annunciator needs to have a node address selected which must be between 0 and 63. It is this address that makes the annunciator unique and allows the external equipment to communicate to a defined annunciator within a multi-drop system. The following examples are provided as a guide to setting the address

ADDRESS		32	16	8	4	2	1
NO.	BINARY	SW1-6	SW1-5	SW1-4	SW1-3	SW1-2	SW1-1
0	0000000	OFF	OFF	OFF	OFF	OFF	OFF
1	0000001	OFF	OFF	OFF	OFF	OFF	ON
2	0000010	OFF	OFF	OFF	OFF	ON	OFF
3	0000011	OFF	OFF	OFF	OFF	ON	ON

Enable Remote Serial Pushbutton Control

In systems connected to a remote device via the communications link it is sometimes a requirement for the pushbutton control to be provided externally via the communications port.SW1-7 should be set to the ON position in applications which require a slave P725 to mimic the functions of a master unit. The local pushbutton will remain operational even if this feature is enabled.

Lamp or LED Outputs

SW1-8 should be set to the ON position in applications using filament lamps to display the serial communication watchdog alarm within the annunciator (typically located above the integral pushbutton module).

SW1-8 should be set to the OFF position in applications using “fit & forget” LED assemblies in place of filament lamps.

SW2 Selection

The table below indicates additional communication parameters that can be set by the user.

SW2-*	FUNCTION	ON	OFF
SW2-1	Set communication baud rate	4800	9600
SW2-2	Set Modbus protocol type	RTU	ASCII
SW2-3	Set parity type	ODD	EVEN
SW2-4	Set as Modbus master or slave	Master	Slave

All switches are factory set to off as default so it is only necessary to make changes if the standard parameters do not suit the particular configuration.

The master/slave selection is only used when a P725 annunciator is using the serial communication link to communicate to another P725 annunciator in a master / slave configuration as detailed earlier.

Option MOD C7 High Speed Communication Version

As an option the Communication port can be supplied as a high speed version with the following selectable speeds.

SW2-*	FUNCTION	ON	OFF
SW2-1	Set communication baud rate	19200	38400

SPR Card Settings

On systems using serial communications Link LK10 on the SPR card should be set to Comm's as shown below

	WARNING! Remove **ALL** power from the unit and fully remove the card before changing any jumpers or switches

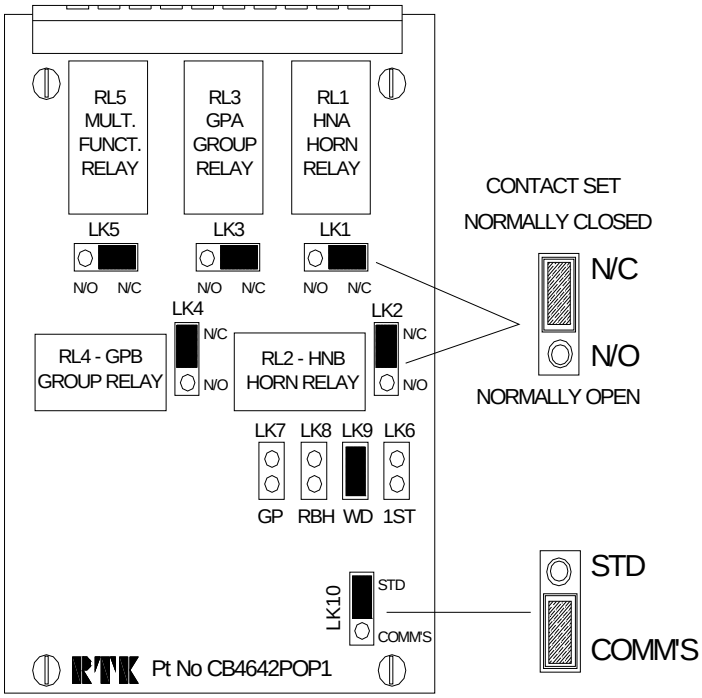

27. Serial Communication Port

This section describes the process of reading from and writing data to a P725 slave annunciator, and also the different types of data interchange possible. The tables below show the standard message formats for data interchange, for both ASCII and RTU protocols.

ASCII tables. Each character represents 7 bit binary data in ASCII format with the exception of the characters in brackets, which should be considered as one character.
X represents a character with more than one possible value.
All characters are framed with 1start bit, 1parity bit and 1 stop bit.

RTU tables. Each character represents 8 bit binary data in hexadecimal format.
Y represents a character with more than one possible value.
All characters are framed with 1 start bit, 1parity bit and 1 stop bit.

Read Request – Master

ASCII	START	ADDRESS	FUNCTION	REGISTER ADDRESS	NO OF REGISTERS	ERROR CHECK	STOP
	:	XX	03	XXXX	0001	XX	[LF] [CR]

RTU	START	ADDRESS	FUNCTION	REGISTER ADDRESS	NO OF REGISTERS	ERROR CHECK	STOP
	ELAPSED TIME 3 ½ CHARACTERS MIN	Y	3	YY	01	YY	ELAPSED TIME 3 ½ CHARACTERS MIN

Read Response - P725 Slave

ASCII	START	ADDRESS	FUNCTION	BYTE COUNT	DATA	ERROR CHECK	STOP
	:	XX	03	02	XXXX	XX	[LF] [CR]

RTU	START	ADDRESS	FUNCTION	BYTE COUNT	DATA	ERROR CHECK	STOP
	ELAPSED TIME 3 ½ CHARACTERS MIN	Y	3	2	YY	YY	ELAPSED TIME 3 ½ CHARACTERS MIN

Write Request/Response

Master write request and P725 slave write response, are the same.

ASCII	START	ADDRESS	FUNCTION	REGISTER ADDRESS	DATA	ERROR CHECK	STOP
	:	XX	06	XXXX	XXXX	XX	[CR] [LF]

RTU	START	ADDRESS	FUNCTION	REGISTER ADDRESS	DATA	ERROR CHECK	STOP
	ELAPSED TIME 3 ½ CHARACTERS MIN	Y	6	YY	YY	YY	ELAPSED TIME 3 ½ CHARACTERS MIN

Address

The address field, in the range O to 63, should be set to match the address set on DIL switch SW1 on the save P725 communication card

Register Address

The register address field contains the address of data within the P725 slave.

REGISTER ADDRESS	CHANNEL NO	TYPE
0	1	Data
1	2	Data
2	3	Data
255	256	Data
256	Pushbutton	Data

Data

The data field uses 16 bits. The information it contains is dependent on the type of data interchange being performed i.e. read or write, register address, status of functions 16, 17 and the status of SW1 Position 7 on the communications board. The table below lists the main types of data interchange and the various settings required. It is assumed in the table below that remote data originates from a master, and local data from a P725 slave.

DATA INTERCHANGE	SETTINGS		
	F16	F17	SW1-7
Read local channel input	OFF	X	X
Read local channel logic	X	OFF	X
Read local channel input + logic	OFF	OFF	X
Read local pushbutton	X	X	X
Write remote channel input	ON	X	X
Write remote channel logic	X	ON	X
Write remote channel input + logic	ON	ON	X
Write remote pushbuttons	X	X	ON

Channel Data

The following table shows the name, function, and relative position of data bits in the data field for a read response or write request of alarm channel data.

	BIT	DATA
LOWEST WORD	0	Input state
	1	First up
	2	Acknowledge
	3	Input latch
	4	Ringback
	5	Not used
	6	Not used
	7	Not used
HIGHEST WORD	Not Used	

Channel data request register address 0 - 255

Input State-BIT 0

0 = Normal, 1 = Abnormal
Read response + F16 deselected – Indicates status of local alarm contact
Read response + F16 selected – Indicates status of input bit

If the alarm contact is in the alarm state then this bit will be one. This has no relation to the actual contact being open or closed which is set using the function number F1, it simply states that the contact is in the alarm state.

First-Up-BIT 1

If this bit is set to one then this channel is a first-up alarm. If multiple first-up groups are used it will be possible to have multiple first-up alarms. The serial communications transmits no details on alarm grouping so this would need to be done externally if required.

Acknowledged-BIT 2

When an alarm channel is acknowledged the visual and audible states are normally changed. When this bit is set to one it indicates that the alarm channel has been acknowledged.

Input Latch-BIT 3

Each alarm channel has in integral latch that is normally set when an alarm occurs and does not reset until the alarm is acknowledged and also reset. This bit will indicate that this latch is on when set to one which means there is still an alarm present that has not been acknowledged and reset.

Ringback-BIT 4

With this sequence set further indication will show that the alarm channel has returned to normal and can be reset. If this bit is set to one then the channel is in ringback mode.

Control Functions - (Pushbuttons)

All the control functions with the exception of sleep and lamp test can be written to or read from the P725 slave. The following table shows the name, function, and relative position of data bits in the data field for a read response or write request of pushbutton data.

	BIT	DATA
LOWEST WORD	0	Test
	1	Acknowledge
	2	Reset
	3	Not used
	4	Not used
	5	Not used
	6	Not used
	7	Not used
HIGHEST WORD	Not used	

Pushbutton Address 256

The first three data bits are used to indicate the pushbutton action.
Their relationship to the pushbutton action is summarised in the table below.

	BITS		
CONTROL FUNCTION	Test (0)	ACK (1)	Reset (2)
Test	1	0	0
Ack	0	1	0
Reset	0	0	1
First-up reset	0	1	1
System test	1	0	1
Mute	1	1	1

Read of multiple channels

- In applications where you need to read or write the status of the input channel without any information on the full alarm status it is possible to transmit 16 channels in a single read/write cycle. This information can be read (Modbus Function 3) or written to (Modbus Function 6) and starts at address 2000 for channels 1 to 16 (bit 0 = channel 1, bit 15 = channel 16), address 2001 for channels 17 to 32 (bit 0 = channel 17, bit 15 = channel 32) and so on.

- On Systems supplied after May 1st 2006 the user is also able to read or write the latch state of the input channel and transmit 16 channels in a single read/write cycle. This information can be read (Modbus Function 3) or written to (Modbus Function 6) and has a starting address of 2016 for channels 1 to 16 (bit 0 = channel 1, bit 15 = channel 16), address 2017 for channels 17 to 32 (bit 0 = channel 17, bit 15 = channel 32) and so on.

28. Systems Linked To 3rd Party Devices

General

Using the advanced communications facilities on the 725 annunciator, it is possible to connect the unit to a variety of 3rd party devices to monitor or control the alarm annunciator.

Any 3rd party device equipped with either a RS485 or a RS232 port using modbus protocol can be connected to the P725 annunciator.

Please note:-
If the RS232 port of the 3rd party device is used a RS485 / 232 converter will be required.

The P725 annunciator always operates as a slave device and it is therefore only able to read and write following requests from the master device.

Various parameters of the communications are user configurable using DIL switches on the communications card.

In larger applications up to 63 separate annunciators can be connected to a single communication network to allow remote monitoring by 3rd party equipment.

In addition to the annunciation we can also supply suitable alarm management software pre-installed onto a single computer or as part of a complete plant wide alarm management system.

P725 Connected To 3rd Party Equipment

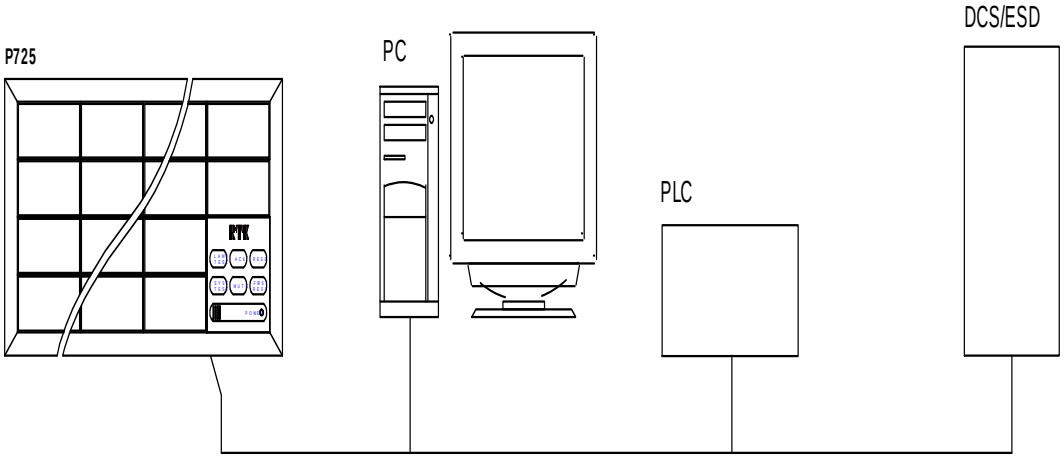

29. P725 To P725 Serial Links

Local And Remote Systems Linked Via Communications

In applications that require local panel alarms to be duplicated or summarised in a central control room each P725 can be supplied with a serial interface card which allows RS485 communication between units using Modbus protocol.

As an example a local annunciator can be hard wired to the alarm contacts and the alarm information can be transmitted over the RS485 communications link to a slave P725 unit mounted in a control room or monitoring station.

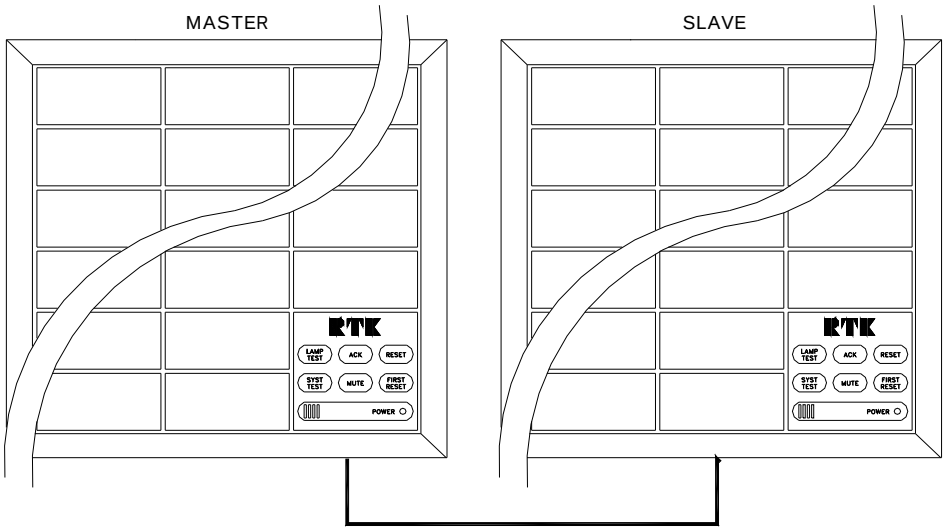

RS485 LINK BETWEEN
P725 ANNUNCIATORS

Each Serial Communication card is equipped with a watchdog relay and this relay will change state if any errors in the internal or external communication are detected.

In larger applications multiple P725 Annunciators can be connected to a single P725 Annunciator used for central monitoring. Each annunciator in the scheme will require the optional serial interface card.

The key advantage with units configured in this manner is the central monitoring annunciator only requires 24VDC logic power and a 4 core RS485 cable to function.

In this example functions F16 and F17 are used to configure each unit to either transmit or receive serial data as required.

Please note:- one of the devices must be set as a master.

Communication Link Wiring Details

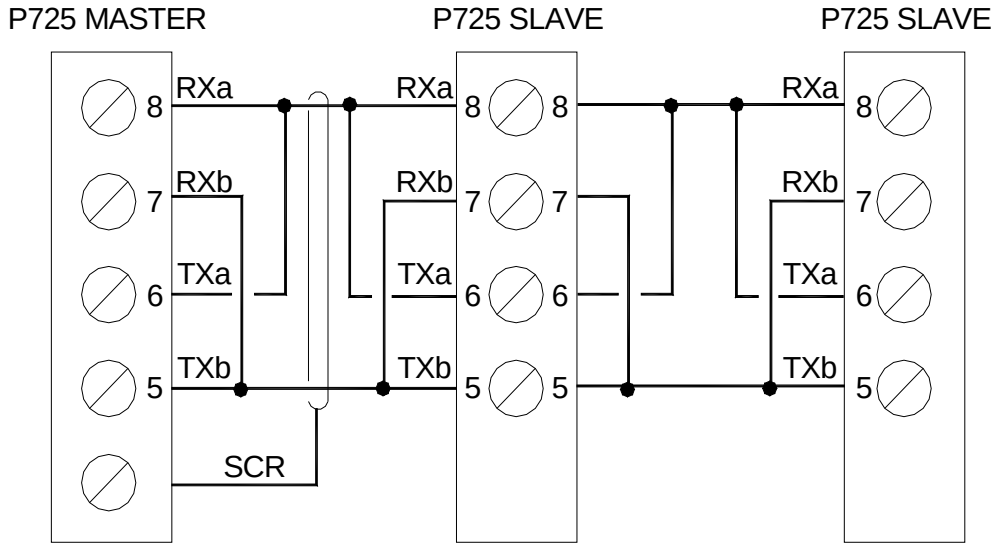

30. Commissioning

A qualified technician properly trained and authorised to work with this type of equipment should carry out commissioning and servicing operations. The following procedure is a summary of the steps normally taken when installing an alarm system. This is the absolute minimum requirement and will generally be supplemented by a number of additional checks relating to the particular application and installation.

	WARNING! Installation, configuration and maintenance of this annunciator must only be performed by competent service personnel

	WARNING! Hazardous voltages may exist on the rear connections of the annunciator. Remove all power before removing any cover or connector. Ensure all covers and connectors are fully secured before restoring power.

STEP	FUNCTION
1	Check all external customer connections to the annunciator are free from earth faults.
2	Ensure the annunciator has been correctly earthed using appropriate sized cable.
3	Check that all customers wiring added during installation is secure and correctly wired.
4	Apply a 24vdc logic supply and check that the power on LED illuminates correctly.
5	Press the system test pushbutton to check that all active alarm channels flash and the audible alarm sounds in accordance with the programmed sequence.
6	Press the remaining pushbuttons required to control the programmed sequence.
7	Refer to the section on programming and check that all of the required functions have been correctly set.
8	Initialise each channel one by one from the field device to check that the laser printed film legend and filter colour matches the associated process.

31. Maintenance

	WARNING! Installation, configuration and maintenance of this annunciator must only be performed by competent service personnel

31.1 No Special Tools

All normal maintenance and programming is carried out from the front of the annunciator without the use of special tools. Filter and film legend changes and lamp and LED replacement are all undertaken by unclipping the front filter assembly.

31.2 Removing Filter Assemblies

See Section 3.4.

31.3 Changing Film Legend

See Section 3.4.

31.4 Changing Bulbs/LED Assemblies

After removal of the filter assembly the lamp holder will be visible. A lamp test pushbutton can be pressed to ascertain which lamps have failed; it is then a simple matter to remove the faulty bulbs. These bulbs are standard 10mm glass wedge and can be removed by pulling directly away from the lamp holder with a pair of pliers or the standard lamp remover supplied with the unit. Replace by reversing the procedure, taking care that the wedge base is correctly located in the socket before pressing home. The LED assemblies are removed and replaced in exactly the same way accept that the glass wedge is replaced with a small PCB connecting tag. The LED's are not polarised so can be fitted in either orientation.

31.5 Fuse Replacement

Two fuses protect the overall system, one protects the supply and motherboard (F1) and the other protects the feed to the alarm contacts (F2). These are both situated on the supply card, which is fitted in the SPR module. The location of the two fuses is shown below. Take care to replace fuses with fuses of exactly the same type. Spare fuses are supplied with all annunciator shipments.

31.6 Position Of Fuses On The Supply Card

	WARNING! Remove **ALL** power from the unit and fully remove the card before changing fuse

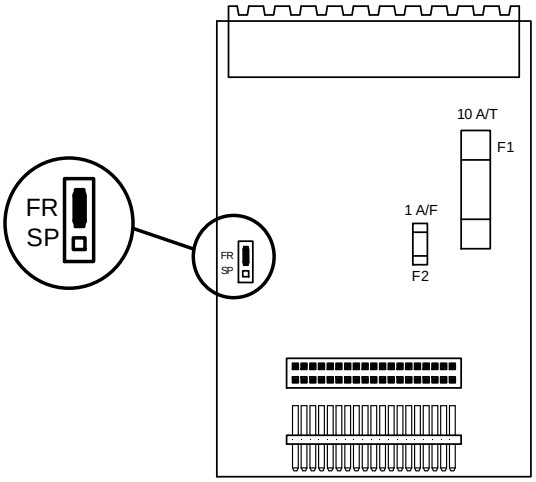

32. Spare Parts Description

Alarm Card Types

There are 4 basic types of dual channel alarm cards however earlier version P725 Annunciators used metal casing and the cards were slightly smaller than the latest versions which are housed in plastic enclosures. The list below details both types.

OLDER VERSIONS *(Metal Case Annunciator)*

PART NO	DESCRIPTION	USED ON
CB3975POP1	2 Channel alarm card	Large, Medium and Small window versions Located in the upper slot of the cell
CB3975POP2	2 Channel alarm card with repeat relays	Large, Medium and Small window versions Located in the upper slot of the cell
CB3975POP3	2 Channel alarm card	Small window versions Located in the lower slot of the cell
CB3975POP4	2 Channel alarm card with repeat relays	Small window versions Located in the lower slot of the cell
CB3975POP5	2 Channel alarm card with communications	Large, Medium and Small window versions Located in the upper slot of the cell
CB3975POP6	2 Channel alarm card with communications and repeat relays	Large, Medium and Small window versions Located in the upper slot of the cell
CB3975POP7	2 Channel alarm card with communications	Small window versions Located in the lower slot of the cell
CB3975POP8	2 Channel alarm card with communications and repeat relays	Small window versions Located in the lower slot of the cell

CURRENT VERSIONS (Plastic Case Annunciator)

P725 Annunciators with cards suitable for use with 2 x first up groups and optional modbus communications card

PART NO	DESCRIPTION	USED ON
CB5674POP51	2 Channel alarm card	Large, Medium and Small window versions Located in the upper slot of the cell
CB5674POP52	2 Channel alarm card with repeat relays	Large, Medium and Small window versions Located in the upper slot of the cell
CB5674POP53	2 Channel alarm card	Small window versions Located in the lower slot of the cell
CB5674POP54	2 Channel alarm card with repeat relays	Small window versions Located in the lower slot of the cell

P725 Annunciators with cards suitable for use with (4) first up groups (no communications)

CB5674POP5*	2 Channel alarm card	Large, Medium and Small window versions Located in the upper slot of the cell
CB5674POP5*	2 Channel alarm card and repeat relays	Large, Medium and Small window versions Located in the upper slot of the cell
CB5674POP5*	2 Channel alarm card	Large, Medium and Small window versions Located in the lower slot of the cell
CB5674POP5*	2 Channel alarm card and repeat relays	Large, Medium and Small window versions Located in the lower slot of the cell

- ***Signal Supply Voltages***

All card types are supplied suitable for operation from one of the following signal supply voltages 24VDC, 48VDC or 125VDC. The voltage levels are screen printed onto each card and one of the voltages will be ticked to indicate which version has been supplied. Alarm cards plug into the rear of the annunciator and once inserted automatically connect to a pre-tested lamp / LED display motherboard.

SPR Dual Card Assembly (Supply And Relay Card)

Current Versions

PART NO	DESCRIPTION	USED ON
CB7080POP	SPR supply card	Replaced the original CB4190POPcard in plastic version annunciator cabinets from Dec 2006 onwards
CB7081POP1	SPR relay card	Replaced the CB4210POP card in plastic version annunciator cabinets from Dec 2006 onwards

Older Versions

PART NO	DESCRIPTION	USED ON
CB4190POP	SPR supply card	Earlier versions used to distribute and fuse logic and signal supplies within the annunciator
CB4210POP	SPR relay card	Earlier versions used to provide the 5 common relay functions. (Dual horn and group plus multifunction relays)
CB4642POP1	SPR relay card	Replaced the original CB4210POP card in plastic version annunciator cabinets

Communications Card

Current Version

PART NO	DESCRIPTION	USED ON
CB6357POP1	Communications card	Replaced the original CB4468POP1 card in plastic version annunciator cabinets from Dec 2006 onwards
CB6357POP2	Communications card	High Speed Version

Older Version

PART NO	DESCRIPTION	USED ON
CB4468POP1	Communication card	Earlier version communication card

Pushbutton Assembly

Part no P725-TAR

Incandescent bulb version

Part no LP-28V-004 (supplied in packs of 10)

LED version

LED Assembly SAP Part no 12006388

33. Other Products

Eaton produces a range of complementary products for many applications in the Industrial Control and Instrumentation field, for both safe and hazardous areas, as listed below.

Sequential Event Recorder
Alarm management systems
Programmable remote logic alarm systems
Hazardous area alarm systems
Power supplies
Intrinsically safe alarm and status display products including:-
Sounders
Led clusters

Please ring our sales office or visit our web site at to obtain our latest product information.

Due to our policy of continuous product development, we reserve the right to amend these specifications without notice.

35. Function Setting per Alarm Sequence

FUNCTION NUMBER	FEATURE DESCRIPTION	STD ISA SEQUENCES				FIRST-UP ISA SEQUENCES				STATUS ONLY
		M	A	A-4	R	F1A	F2M-1	F3A	FFAM2	
F3	Manual / Automatic Reset	OFF	ON	ON	OFF	ON	OFF	ON	OFF	OFF
F4	Lock In / Non Lock In	OFF	OFF	ON	OFF	OFF	OFF	OFF	OFF	OFF
F5	Ringback Sequence	OFF	OFF	OFF	ON	OFF	OFF	OFF	OFF	OFF
F6	2 Pushbutton Operation	OFF	OFF	OFF	OFF	OFF	OFF	OFF	OFF	OFF
F10	First Up Seq. FO	** Set To On For Slow Flash				OFF	OFF	OFF	OFF	OFF
F11	First Up Seq. F1	OFF	OFF	OFF	OFF	ON	OFF	OFF	OFF	OFF
F12	First Up Seq. F2	OFF	OFF	OFF	OFF	OFF	ON	OFF	OFF	OFF
F13	First Up Seq. F3	** Set To On For Fast Flash				OFF	OFF	ON	ON	OFF
F14	First Up Group A	OFF	OFF	OFF	OFF	When using First-Up sequences Functions F14 to F17 allow the user to link each channel into the required First-Up Group A, B, C or D. Channels can linked to more than one group if required.				OFF
F15	First Up Group B	OFF	OFF	OFF	OFF					OFF
F16	First Up Group C	OFF	OFF	OFF	OFF					OFF
F17	First Up Group D	OFF	OFF	OFF	OFF					OFF
F23	Critical Horn Drive	Channels selected to F23 will drive the internal horn and critical horn relay								OFF
F24	Non Critical Horn Drive	Channels selected to F24 will drive the non-critical horn relay only								OFF

** Note 1 When using Std. ISA sequences Functions F10 or F13 sets the preferred Flash Rate, F10 = slow flash F13 = fast flash.

AUSTRALIA
MTL Instruments Pty Ltd,
10 Kent Road, Mascot, New South Wales, 2020, Australia

Tel: +61 1300 308 374 Fax: +61 1300 308 463
E-mail: mtlsalesanz@eaton.com

BeNeLux
MTL Instruments BV
Ambacht 6, 5301 KW Zaltbommel
The Netherlands

Tel: +31 (0)418 570290 Fax: +31 (0)418 541044
E-mail: mtl.benelux@eaton.com

CHINA
Cooper Electric (Shanghai) Co. Ltd
955 Shengli Road, Heqing Industrial Park
Pudong New Area, Shanghai 201201

Tel: +86 21 2899 3817 Fax: +86 21 2899 3992
E-mail: mtl-cn@eaton.com

FRANCE
MTL Instruments sarl,
7 rue des Rosiéristes, 69410 Champagne au Mont d'Or
France

Tel: +33 (0)4 37 46 16 53 Fax: +33 (0)4 37 46 17 20
E-mail: mtlfrance@eaton.com

GERMANY
MTL Instruments GmbH,
Heinrich-Hertz-Str. 12, 50170 Kerpen, Germany

Tel: +49 (0)22 73 98 12- 0 Fax: +49 (0)22 73 98 12- 2 00
E-mail: csckerpen@eaton.com

INDIA
MTL India,
No.36, Nehru Street, Off Old Mahabalipuram Road
Sholinganallur, Chennai- 600 119, India

Tel: +91 (0) 44 24501660 /24501857 Fax: +91 (0) 44 24501463
E-mail: mtlindiasales@eaton.com

ITALY
MTL Italia srl,
Via San Bovio, 3, 20090 Segrate, Milano, Italy

Tel: +39 02 959501 Fax: +39 02 95950759
E-mail: chmninfo@eaton.com

JAPAN
Cooper Crouse-Hinds Japan KK,
MT Building 3F, 2-7-5 Shiba Daimon, Minato-ku,
Tokyo, Japan 105-0012

Tel: +81 (0)3 6430 3128 Fax: +81 (0)3 6430 3129
E-mail: mtl-jp@eaton.com

NORWAY
Norex AS
Fekjan 7c, Postboks 147,
N-1378 Nesbru, Norway

Tel: +47 66 77 43 80 Fax: +47 66 84 55 33
E-mail: info@norex.no

RUSSIA
Cooper Industries Russia LLC
Elektrozavodskaya Str 33
Building 4
Moscow 107076, Russia

Tel: +7 (495) 981 3770 Fax: +7 (495) 981 3771
E-mail: mtlrussia@eaton.com

SINGAPORE
Cooper Crouse-Hinds Pte Ltd
No 2 Serangoon North Avenue 5, #06-01 Fu Yu Building
Singapore 554911

Tel: +65 6 645 9888 Fax: +65 6 487 7997
E-mail: sales.mtlsing@eaton.com

SOUTH KOREA
Cooper Crouse-Hinds Korea
7F. Parkland Building 237-11 Nonhyun-dong Gangnam-gu,
Seoul 135-546, South Korea.

Tel: +82 6380 4805 Fax: +82 6380 4839
E-mail: mtl-korea@eaton.com

UNITED ARAB EMIRATES
Cooper Industries/Eaton Corporation
Office 205/206, 2nd Floor SJ Towers, off. Old Airport Road,
Abu Dhabi, United Arab Emirates

Tel: +971 2 44 66 840 Fax: +971 2 44 66 841
E-mail: mtlgulf@eaton.com

UNITED KINGDOM
Eaton Electric Ltd,
Great Marlings, Butterfield, Luton
Beds LU2 8DL

Tel: +44 (0)1582 723633 Fax: +44 (0)1582 422283
E-mail: mtlenquiry@eaton.com

AMERICAS
Cooper Crouse-Hinds MTL Inc.
3413 N. Sam Houston Parkway W.
Suite 200, Houston TX 77086, USA

Tel: +1 281-571-8065 Fax: +1 281-571-8069
E-mail: mtl-us-info@eaton.com

Powering Business Worldwide

Eaton Electric Limited,
Great Marlings, Butterfield, Luton
Beds, LU2 8DL, UK.
Tel: + 44 (0)1582 723633 Fax: + 44 (0)1582 422283
E-mail: mtlenquiry@eaton.com
www.mtl-inst.com

© 2016 Eaton
All Rights Reserved
Publication No. INM RTK725 range rev 30 290916
September 2016

EUROPE (EMEA):
+44 (0)1582 723633
mtlenquiry@eaton.com

THE AMERICAS:
+1 800 835 7075
mtl-us-info@eaton.com

ASIA-PACIFIC:
+65 6 645 9888
sales.mtlsing@eaton.com

The given data is only intended as a product description and should not be regarded as a legal warranty of properties or guarantee. In the interest of further technical developments, we reserve the right to make design changes.