Instruction manual
MTL fieldbus networks

January 2017
INM9101 Rev 3

CROUSE-HINDS
SERIES

9101-22

4-segment, redundant FISCO power supply system for Invensys Foxboro I/A® Control Systems

Powering Business Worldwide

Declaration of Conformity

A printed version of the Declaration of Conformity has been provided separately within the original shipment of goods. However, you can find a copy of the latest version at http://www.mtl-inst.com/certificates

CONTENTS

DECLARATION OF CONFORMITY II

GENERAL SAFETY INFORMATION IV

1 OVERVIEW 1

2 DESCRIPTION 1
- 2.1 Architecture 1
- 2.2 Module carrier 3

3 INSTALLATION 3
- 3.1 General 3
- 3.2 Required tools 3
- 3.3 Mounting overview 3
- 3.4 Surface mounting 5
- 3.5 Mounting and removal of modules 5

4 ELECTRICAL INSTALLATION 6
- 4.1 Redundant Power Connections 6
- 4.2 Alarm Connections 6
- 4.3 Hazardous-Area Fieldbus Segment Connections 7
- 4.4 Host System Connection 8

5 TESTING AND FAULT FINDING 9
- 5.1 Testing 9
- 5.2 Manual Failover testing 9
- 5.3 Fault finding 10
- 5.4 Replacing failed modules 10

6 APPENDIX : ATEX CERTIFICATION INFORMATION 11
- 6.1 General 11
- 6.2 Installation 11
- 6.3 Inspection and maintenance 11
- 6.4 Repair 11
- 6.5 Marking 11

GENERAL SAFETY INFORMATION

Safety instructions for installation and operating personnel

See Appendix on ATEX certification for countries in EEC, or governed by these standards.

The operating instructions provided here contain **essential safety instructions** for installation personnel and those engaged in the operation, maintenance and servicing of the equipment.

WARNING !
Failure to comply with these instructions can endanger the lives or health of personnel and risk damage to the plant and the environment.

WARNING !
The responsibility for planning, installation, commissioning, operation and maintenance, particularly with respect to applications in explosion-hazard areas, lies with the plant operator.

Before commencing installation or commissioning:

- Read and understand the contents of this manual
- Ensure installation and operating personnel have received adequate training for this task
- Ensure that any operating instructions are fully understood by the personnel responsible.
- Observe national and local installation and mounting regulations (e.g. IEC 60079-14).

WARNING !
These assemblies may not be used in explosion-hazard area applications if they have been used previously in general electrical installations.

During operation:

- Make the relevant instructions available at all times to the operating personnel.
- Observe safety instructions.
- Observe national safety and accident prevention regulations.
- Operate the equipment within its published specification.
- Servicing, maintenance work or repairs not described in this manual must not be performed without prior agreement with the manufacturer.
- Any damage to this equipment may render its explosion protection null and void.
- No changes to any of the components that might impair their explosion protection are permitted.

If any information provided here is not clear:

- Contact Eaton's MTL product line or one of its representatives.

Note: Improper installation and operation of the enclosure can result in the invalidation of the guarantee.

Related documents

Datasheet	Description
EPS9101-22	4-segment, redundant, FISCO power supply system, IIB Gas Groups for Invensys Foxboro I/A Control Systems

9101-22 - 4-segment, redundant FISCO power supply system

Figure 1.1 9101-22 power supply assembly

1 OVERVIEW

The 9101-22 power supply system provides an intrinsically safe field network for FOUNDATION™ fieldbus systems in hazardous areas. It has host-side connections that allow direct integration into Invensys Foxboro I/A® Series control systems by means of standard pre-assembled cable. Versions of the 910x-22 Series power supply are also available for use with other control systems. Visit www.mtl-inst.com for more information.

The output of the power supply modules complies with the Fieldbus Intrinsically Safe Concept (FISCO) model, in accordance with IEC standard 60079-27. The key advantages of FISCO over earlier 'Entity' model installations to FF-816 are higher available field current and reduced safety documentation, while retaining the ability to conduct maintenance while energised and without 'gas clearance'.

The 9101-22 system builds on the MTL 912x-IS range of power supplies, which have become established as the industry standard solution for FISCO networks. The system now achieves higher levels of overall system availability by providing redundancy of the power modules.

When used with intrinsically safe versions of MTL Megablock field wiring hubs, the power supply system allows complete FISCO networks to be assembled for even the most demanding process applications.

The datasheet for this model is referenced on the opposite page.

2 DESCRIPTION

2.1 Architecture

Each of the four IS fieldbus segments is powered by a redundant pair of pluggable FISCO power supply modules. The modules operate in active/hot standby mode, ensuring that the fieldbus segments are continually powered.

In the event of a failure of an active power supply module, the field circuit is automatically transferred to the standby module. The change-over is managed by Supply Arbitration Modules (SAMs), which monitor the health of the FISCO power supplies while maintaining intrinsic safety requirements during the transition to the standby module. The SAMs are also duplicated and replaceable, meaning that there are no non-redundant system components.

Switch-over is achieved rapidly and in accordance with FOUNDATION™ fieldbus specifications, and without risk of losing fieldbus devices from the bus. A combination of LED diagnostics and alarm signalling provides failure notification of FISCO power supplies and SAM modules, allowing failed hardware to be identified and full redundancy to be restored by module replacement.

Figure 2.1
9101-22 architecture per segment

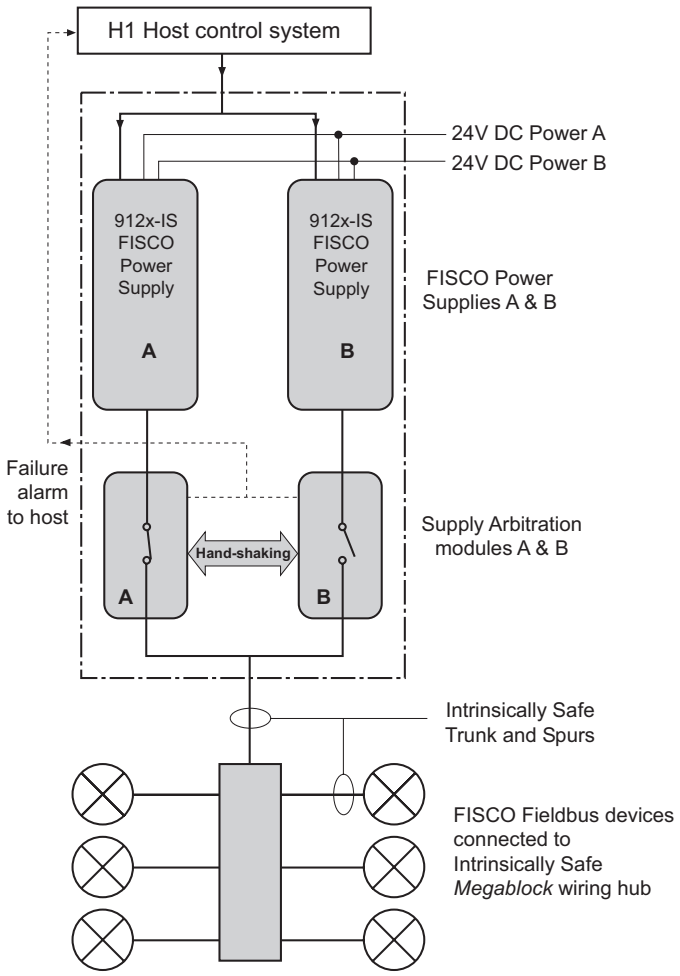

Figure 2.2
9101-22 assembly dimensions

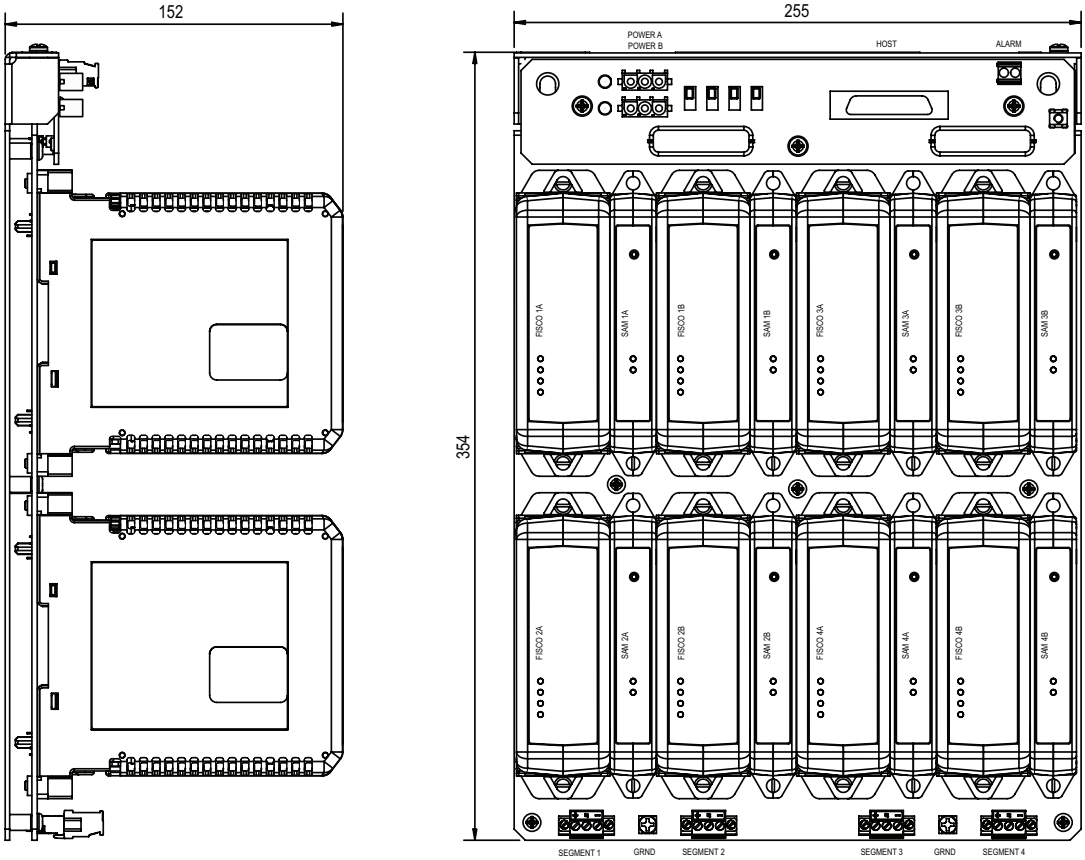

2.2 Module carrier

The module carrier provides fieldbus power for four fieldbus segments. It supports pluggable power supply and arbitration modules for each segment and all connection facilities.

Each carrier has safe-side connections for redundant 24V input power and H1 communications to the host control system. A volt-free failure alarm is also provided for connection to a digital input module. Pluggable screw terminals are provided on the hazardous side for each of the four intrinsically safe trunks. There are no active electronic circuits on the carrier, resulting in long calculated Mean Time To Failure (MTTF) and overall high system availability.

The carrier dimensions are designed to provide high packing density in typical 800mm wide equipment cabinets. Survival in high-vibration marine environments is achieved by secure panel-mount fixings.

The FISCO power supply modules are pluggable versions of the MTL 9122-IS range, and support the same level of features. LED indicators provide information on system health and assist with fault diagnosis.

3 INSTALLATION

WARNING	**WARNING !** This equipment must be installed, operated and maintained only by trained competent personnel and in accordance with all appropriate international, national and local standard codes of practice and site regulation for intrinsically safe apparatus and in accordance with the instructions contained here.

3.1 General

The 9101-22 power system is designed for mounting in a non-hazardous area.

The mounting conditions must:

a. prevent any form of pollution that could compromise the operation of the unit. For example, an unpolluted location or a suitable enclosure could be chosen.
b. provide an adequate level of mechanical protection. This can be achieved by selecting a protected location, a suitable cabinet or enclosure, or a combination of both.
c. ensure that all cable entries and connections are secure by making provision for the careful routing and securing of all cables.
d. provide adequate security against unauthorised interference.
e. ensure that the permitted ambient temperature range of the units (–20°C to + 60°C) is not exceeded. Power dissipation within the equipment's cabinet or enclosure and the use of shading against direct sunlight should be considered.

3.2 Required tools

To remove or replace any of the modules a straight-bladed screwdriver is required with a minimum shaft length of 130mm (5¼") and a maximum blade diameter of 5mm (3/16").

3.3 Mounting overview

Mount the 9101-22 assembly on a vertical surface with the orientation shown in Figure 2.2. Any other orientation will reduce the permitted maximum operating temperature.

IMPORTANT: The mounting surface and any associated components must be capable of supporting the weight of the complete assembly which is approximately 6.5kg.

Six slotted holes are provided in the backplate for mounting the assembly - see Figure 3.1 - and access to the mounting screws is provided through the circuit board (after removal of some modules). This feature allows the assembly to be fitted to, or removed from, its mounting without complete removal of the mounting screws. In order to take advantage of this method however,15mm of free space is required above the top edge of the assembly to allow the backplate to be mounted or removed.

Figure 3.1
Baseplate mounting holes

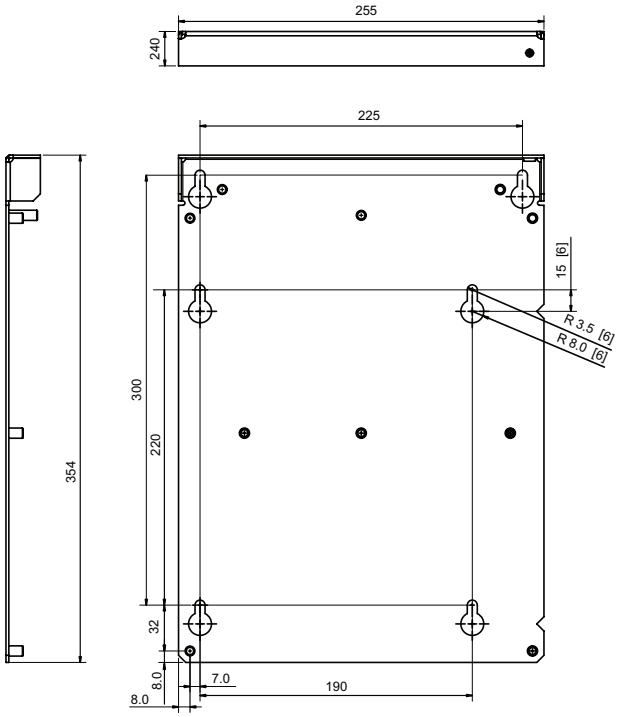

Figure 3.2
9122-IS-CM power supply module dimensions

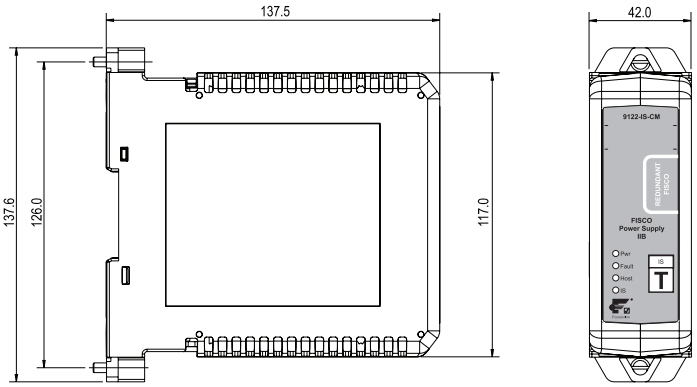

Figure 3.3
9129-IS Supply Arbitration Module (SAM) dimensions

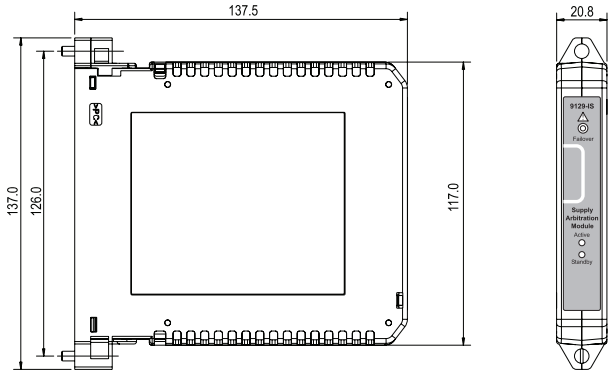

3.3.1 Outdoor mounting

If the assembly is to be mounted in an outdoor location, a suitable enclosure with a minimum of IP54 ingress protection is required. However, in some locations, a higher degree of ingress protection rating is recommended as corrosion resistance may be necessary or desirable and the emphasis should be placed on the suitability for the application.

3.4 Surface mounting

Prepare holes in the mounting surface as shown in Figure 3.1. Thread these M6 or fit M6 captive nuts as required.

The recommended installation method for this assembly is to use M6 screws that have captive washers (also referred to as 'Sems' screws). Alternatively, standard M6 screws can be used - recommended minimum length 15mm- with a locking washer and a plain washer fitted on each.

Start the screws into the prepared threaded holes on the mounting surface, leaving approximately 10mm of thread visible.

With all modules removed, fit the backplate and its attached circuit board over the screw-heads (and washers) and allow it to rest on the screws. Tighten all of the screws, to the torque recommended by the fixings manufacturer, to secure the backplate to the mounting surface.

3.5 Mounting and removal of modules

The 9101-22 power system is installable only in a safe/non-hazardous area, so all of the modules that mount on the carrier or adaptor board are capable of live replacement ("hot- swapping").

Note: The SAM module has a mechanical safety interlock that prevents it from being removed before its associated power supply; this is so that the segment power stays in a safe and predictable state. This interlock must not be removed or defeated in any way.

3.5.1 Installing 9122-IS-CM power supply and SAM modules

The SAM module must be installed before its associated FISCO power supply module.

Figure 3.5 SAM module interlock tab

1. Rotate the red interlock tab on the SAM module to the side and up to reveal the fixing screw head. See Figure 3.5.
2. Locate the SAM module in its position and tighten both of its fixing screws to a torque not exceeding 0.9 Nm.
3. Return the interlock tab to cover the screw head. See Figure 3.5
4. Locate the FISCO power supply module to the left of the SAM module and tighten both of its fixing screws to a torque not exceeding 0.9 Nm.
5. Repeat 1- 4 for the other module pairs, as required.

3.5.2 Removing 9122-IS-CM power supply and SAM modules

The FISCO power supply module must be removed before its associated SAM module.

1. Loosen the two securing screws of the FISCO power supply module and remove it.
2. Slide the red interlock tab on the SAM module to the side to obtain access to the securing screw head. See Figure 3.5.
3. Loosen the two securing screws of the SAM module and remove it also.
4. Repeat tasks 1 – 3 for the other module pairs, as required.

4 ELECTRICAL INSTALLATION

4.1 Redundant Power Connections

Connect the incoming redundant 19.2 - 30V power supplies to the 3-pin POWER A and POWER B connectors using compatible Foxboro power cables from the P0926Kx series. (Select a cable of the appropriate length.)

Figure 4.1 POWER A & POWER B connectors

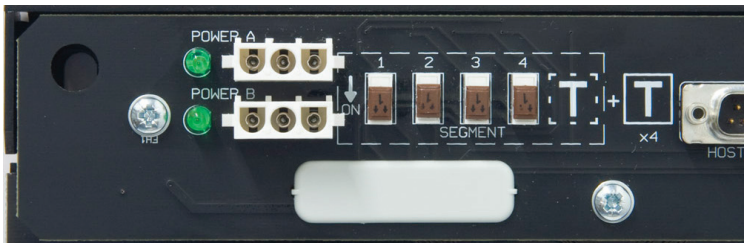

Correct operation requires both input power supplies to be present in order to avoid an alarm signal being generated.

Note: Product certification requires all pluggable connectors to be in place, in order to maintain the product's IP20 rating (for example, see Power B in Figure 4.1).

Each input power supply must be able to support, independently - but not simultaneously, the power requirements of four fieldbus segments; which, with a power supply voltage of 24V, require up to 2.5A when all four are running at maximum load.

The user can decide how many 9101-22 assemblies will be powered from each bulk supply, but adequate protective fusing should be provided to protect both the supplies and the assemblies.

4.1.1 Backplate Grounding

It is important to ensure that the backplate is in good electrical contact with the enclosure and its protective ground. If the backplate does not obtain this ground connection directly through its method of mounting then a separate connection must be made from the ground terminal provided on the backplate to the enclosure's protective ground.

4.2 Alarm Connections

Each SAM module and each HOST PSU module contains a solid state switch that is 'closed' in normal operation and in this condition exhibits a nominal resistance (@25°C) of 36W. If a SAM module recognises a fault condition its switch will 'open' and present a resistance in excess of 1MΩ.

The eight SAM modules (two per segment) are all connected in series and the ends presented at the screw-terminal ALARM connector at the top edge of the adaptor board (do not exceed 0.4 Nm torque). See Figure 4.4. In normal operation the ALARM terminals on the module carrier will present a nominal resistance value of 288Ω - see Note 2 below.

Figure 4.2 Daisy-chaining ALARM circuits

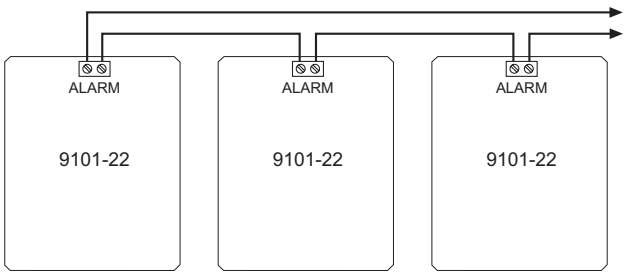

If required, the alarm circuits of a number of 9101-22 assemblies can be daisy-chained to present a single alarm signal. See Figure 4.2. In order to do this, any digital input module, that is used to receive the alarm signal, must be able to recognise the total series resistance of all the carriers as a normal 'closed' condition. For example, three carriers connected in series will present a series resistance (@25°C) in the 'closed' condition of around 864Ω.

Notes:

1. Although the Alarm terminals on the module carrier are marked '+' and '–' to aid identification, the solid state alarm circuits are in fact polarity insensitive.
2. The series resistance of the solid state switches has a +ve temperature coefficient of approx 3W/°C.
3. For the alarm circuit to operate correctly, (i.e. for the solid state switches to go to a 'closed' condition), all of the FISCO power supply and SAM modules must be installed on the module carrier. For any SAM module location that is not used, a 9127-BLK blanking module must be installed to maintain alarm circuit continuity.

4.2.1 9127-BLK blanking module

A 9127-BLK blanking module must be installed in every unused SAM location on the carrier in order to allow the system to recognise alarms from the installed Power Supply and SAM modules. The 9127-BLK blanking module is the same size and shape as a SAM and is used to maintain alarm circuit continuity for the installed modules.

4.3 Hazardous-Area Fieldbus Segment Connections

The intrinsically safe segment power output connections are provided via 3-way, pluggable, rising cage clamp, screw terminals at the bottom edge of the 9101-22 module carrier. See Figure 4.3.

Note: All connector screws should be tightened to a torque not exceeding 0.4 Nm.

Figure 4.3 Segment connectors and ground stud

Prepare the cables and connect to the +, S and – terminals as indicated on the pluggable connectors.

Note: It is important during installation to **segregate intrinsically safe wiring** from other non-IS wiring and to mark it clearly as intrinsically safe.

Two ground studs (IS Shield A and IS Shield B) are provided on the module carrier, adjacent to the hazardous area field wiring connections. These are linked to the 'S' terminals of the segment connectors and provide a means of grounding the cable screens/shields of the intrinsically safe field cables carrying the fieldbus trunks. Use them to ground the field cable shields as follows.

- Connect each of the ground studs on the module carrier to a local, high integrity earth with a cable having a resistance of less than 1Ω. This should be a clean instrument earth that is electrically bonded to the point of earthing of the local AC power supply to the equipment cabinet that houses the FISCO power supplies. The two studs should each be wired with a separate cable. This earth cable should typically have a cross-sectional area of 4mm^2 or greater.

Note: Product certification requires all pluggable connectors to be in place, in order to maintain the product's IP20 rating (for example, see Figure 4.3).

4.3.1 Field segment terminators

The FISCO power supply provides on terminator for each of the intrinsically-safe field segments. A second terminator must be provided in the field for each segment, for example, by selecting Megablock wiring hubs with built-in terminators.

4.4 Host System Connection

The Host H1 segment connection is provided on the adaptor card- see Figure 4.4. This provides a 25-pin subminature D-type connector compatible with Foxboro system cables from the P0916Dx series. (Select a cable of the appropriate length.)

Figure 4.4 Host H1 and ALARM connectors

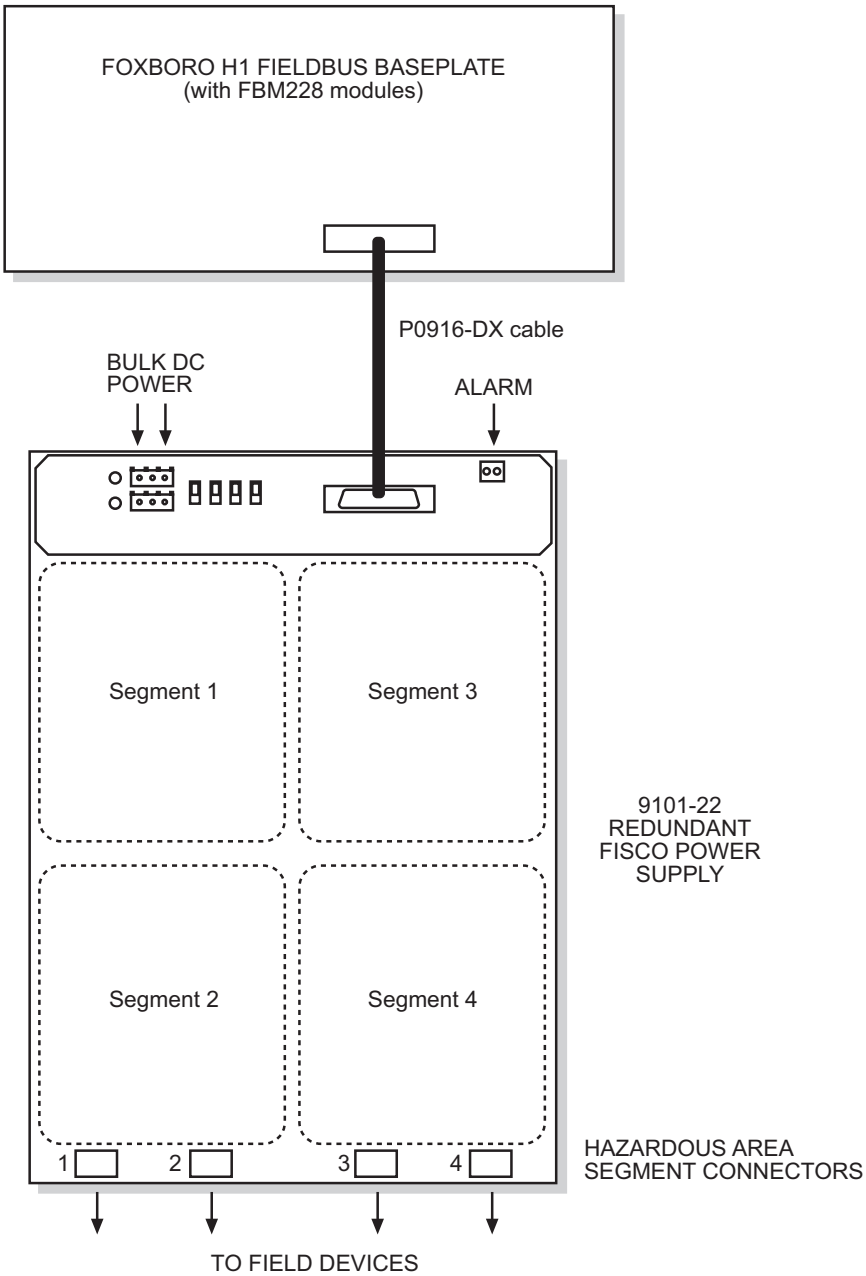

4.4.1 Host segment terminators

Fixed terminators are provided for each of the four host segments on the module carrier, not in the FISCO power supply. (This ensures that the terminator is not lost, or duplicated, when the power supply modules are switched or removed from the carrier.)

Figure 4.5 Terminator switches

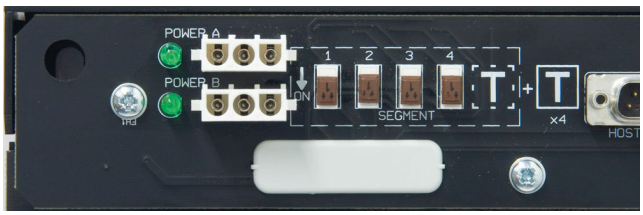

Additional switchable terminations per segment are also provided on the carrier for use when short cables (i.e. less than 30m) are used between the host and the 9101-22 assembly. In this case, the second termination can be enabled (switched ON) instead of a host end termination. This method ensures the correct impedance is presented to the host. The switches (SW1–SW4) are located between the power and host connections- see Figure 4.5.

5 TESTING AND FAULT FINDING

The 9101-22 is provided with switches and LED indicators to enable the user to understand the status of the equipment at any time. The functionality of these diagnostic aids is described in this section.

5.1 Testing

After installation or at any other time, e.g. during maintenance checks, the output voltage at the segment terminals should not be less than 12.6V DC. This, and many other useful fieldbus parameters, can be measured with the MTL FBT-6 portable tester, which also has the advantage of being certified for use in Zone 1 hazardous area.

5.2 Manual Failover testing

Figure 5.1: SAM failover switch

Each Supply Arbitration Module (SAM) has a 'Failover' switch to test the functioning of the failover mechanism from Active to Standby power supply.

This is for proof-testing of the power supply as part of a scheduled maintenance program.

A manual changeover is caused by pressing the Failover switch on the Active SAM. Pressing the Failover switch on the Standby SAM will have no effect.

Failover will NOT occur if the Standby power supply, or its associated SAM is in a 'failed' condition; indicated by both the Active and Standy LEDs being extinguished, or by either of them flashing- see Section 5.3.2.

CAUTION
Forcing a change of state of the active and standby modules by manually operating the 'Failover' push button is recommended only during plant shutdown, not during the operation of a live process application.

Note: The default startup configuration always makes the 'A' power supply active.

To confirm the Failover action of a redundant pair- with the 'A' power supply active:

1. Verify the power supply is not running a live process. Follow local plant procedures
2. Verify the health of the power supply to be tested (see section 5.3)
3. Press the Failover switch on the 'A' SAM to force the Standby 'B' power supply to become the Active one.
4. Press the Failover switch on the 'B' SAM to force the 'A' power supply to become the Active one again.

5.3 Fault finding

The 9101-22 is provided with a number of indicators to assist the user in remedying a fault. Using these indicators in a structured way enables the user to rapidly identify the root of the fault.

5.3.1 Incoming power supply indicators

An indicator is placed beside each incoming power supply connector (POWER A /POWER B) to indicate whether power is present at that point.

LED label	Description	Healthy Status
Power A (green)	Power	**ON** (Power OK)
Power B (green)	Power	**ON** (Power OK)

Table 5.1: Incoming power LED functions

A bright LED indicates a healthy input power level but a dim LED may indicate insufficient voltage.

5.3.2 Supply Arbitration Module indicators

There are two LED indicators on the front panel of the 9129-IS SAM module to indicate the current mode of the power supply. The description of these indicators is given in Table 5.2 below.

LED label	Description	Healthy Status (Active)	Healthy Status (Standby)
Active (yellow)	Power Supply Active	**ON** (Active)	**OFF** (Not Active)
Standby (yellow)	Power Supply Standby	**OFF** (Not Standby)	**ON** (Standby)

Table 5.2: 9129-IS SAM LED functions

Note: During startup, either of the LEDs may flash for up to 10 seconds- this is normal operation.

5.3.3 FISCO power supply indicators

There are four LED indicators on the front panel of the 9122-IS-CM FISCO Power Supply. The function of these indicators is provided in Table 5.3 below.

LED label	Description	Healthy Status
Power (green)	Power	**ON** (Power OK)
Fault (red)	Fault detected	**OFF** (No Fault)
Host (yellow)	Host communications	**ON** (Host Comms OK)
IS (yellow)	Field communications	**ON** (Field Comms OK)

Table 5.3: 9122-IS-CM FISCO PSU LED functions

5.4 Replacing failed modules

Because the 9101-22 is not installed in a hazardous area, any of the modules fitted to the carrier may be 'hot-swapped' i.e. replaced without isolating or disconnecting any incoming power supplies.

If any module failure has been identified using, for example, the fault-finding procedures described in Section 5.3, follow the instructions provided in Section 3.5 to remove and replace the module.

It should be noted that the design prevents the removal of a SAM module without first removing its associated FISCO power supply. Similarly, the SAM module must be installed on the carrier before its associated FISCO power supply module.

6 APPENDIX : ATEX CERTIFICATION INFORMATION

The following information is in accordance with the Essential Health and Safety Requirements (Annex II) of the EU Directive 2014/34/EU [the ATEX Directive- safety of apparatus] and is provided for those locations where the ATEX Directive is applicable.

6.1 General

a. This equipment must only be installed, operated and maintained by competent personnel. Such personnel shall have undergone training, which included instruction on the various types of protection and installation practices, the relevant rules and regulations, and on the general principles of area classification. Appropriate refresher training shall be given on a regular basis. [See clause 4.2 of EN 60079-17].

b. This equipment has been designed to provide protection against all the relevant additional hazards referred to in Annex II of the directive, such as those in clause 1.2.7.

c. This equipment has been designed to meet the requirements of EN60079-0:2009, EN 60079-11:2007, EN 60079-27:2006 and EN 61241-11:2006 except in respect of those requirements listed at item 18 of the Schedule.

6.2 Installation

a. The installation must comply with the appropriate European, national and local regulations, which may include reference to the IEC code of practice IEC 60079-14. In addition, particular industries or end users may have specific requirements relating to the safety of their installations and these requirements should also be met. For the majority of installations the Directive 1999/92/EC [the ATEX Directive- safety of installations] is also applicable.

b. The 4 Segment Redundant FISCO Power Supplies are certified:

   Ⓔ II (2)GD [Ex ib Gb] IIB (–20°C ≤ Ta ≤ +60°C)
   [Ex ib Db] IIIC (–20°C ≤ Ta ≤ +60°C)

   and are designed for installation in a non-hazardous areas.

c. Unless already protected by design, this equipment must be protected by a suitable enclosure against:

   i) mechanical and thermal stresses in excess of those noted in the certification documentation and the product specification,

   ii) aggressive substances, excessive dust, moisture and other contaminants.

Read also the Special Conditions for Safe Use (below) for any additional or more specific information.

Special Conditions for Safe Use

None.

6.3 Inspection and maintenance

a. Inspection and maintenance should be carried out in accordance with European, national and local regulations which may refer to the IEC standard IEC 60079-17. In addition specific industries or end users may have specific requirements which should also be met.

b. Access to any internal circuitry must not be attempted during operation.

6.4 Repair

The modules used in this product cannot be repaired by the user and must be replaced with an equivalent certified product.

6.5 Marking

Each product is marked in compliance with the Directive and CE marked with the Notified Body Identification Number.

This information applies to products manufactured during or after the year 2011.

EATON®

CROUSE-HINDS SERIES

9122-IS-CM

MTL FISCO power supply - IIB

IECEx BAS04.0031 [Ex ib] IIB [Ex ibD] Um : 253V (-20°C ≤ Ta ≤ +60°C)

Ex II (2) GD [Ex ib] IIB [Ex ibD]
BAS02ATEX7277

Part of IECEx BAS 09.0055
Part of Baseefa09ATEX0127
Part of MTL09ATEX9108X

19.2 - 30Vdc ⎓ 9.9W Max

SEE INSTRUCTION MANUAL

EATON ELECTRIC LTD, Luton, England,
LU2 8DL. Made in England. www.mtl-inst.com

CE 1180 30 3884/3

EATON®

CROUSE-HINDS SERIES

9129-IS

MTL FISCO supply arbitration module

Part of IECEx BAS 09.0055 -20°C ≤ Ta ≤ +60°C
Part of Baseefa09ATEX0127
Part of MTL09ATEX9108X

SEE INSTRUCTION MANUAL

EATON ELECTRIC LTD, Luton, England,
LU2 8DL. Made in England. www.mtl-inst.com

CE 1180 30 3871/2

EATON CROUSE-HINDS SERIES
9101-22-PS MTL R-FISCO power supply system
[Ex ib Gb] IIB [Ex ib Db] IIIC (-20°C ≤ Ta ≤ +60°C)
Ex II (2) GD Baseefa09ATEX0127
IECEx BAS 09.0055
EATON ELECTRIC LTD, Luton, England, LU2 8DL Made in England

CE 1180 30 4025/2

This page is left intentionally blank

This page is left intentionally blank

This page is left intentionally blank

AUSTRALIA
MTL Instruments Pty Ltd,
10 Kent Road, Mascot, New South Wales, 2020, Australia

Tel: +61 1300 308 374 Fax: +61 1300 308 463
E-mail: mtlsalesanz@eaton.com

BeNeLux
MTL Instruments BV
Ambacht 6, 5301 KW Zaltbommel
The Netherlands

Tel: +31 (0)418 570290 Fax: +31 (0)418 541044
E-mail: mtl.benelux@eaton.com

CHINA
Cooper Electric (Shanghai) Co. Ltd
955 Shengli Road, Heqing Industrial Park
Pudong New Area, Shanghai 201201

Tel: +86 21 2899 3817 Fax: +86 21 2899 3992
E-mail: mtl-cn@eaton.com

FRANCE
MTL Instruments sarl,
7 rue des Rosiéristes, 69410 Champagne au Mont d'Or
France

Tel: +33 (0)4 37 46 16 53 Fax: +33 (0)4 37 46 17 20
E-mail: mtlfrance@eaton.com

GERMANY
MTL Instruments GmbH,
Heinrich-Hertz-Str. 12, 50170 Kerpen, Germany

Tel: +49 (0)22 73 98 12- 0 Fax: +49 (0)22 73 98 12- 2 00
E-mail: csckerpen@eaton.com

INDIA
MTL India,
No.36, Nehru Street, Off Old Mahabalipuram Road
Sholinganallur, Chennai- 600 119, India

Tel: +91 (0) 44 24501660 /24501857 Fax: +91 (0) 44 24501463
E-mail: mtlindiasales@eaton.com

ITALY
MTL Italia srl,
Via San Bovio, 3, 20090 Segrate, Milano, Italy

Tel: +39 02 959501 Fax: +39 02 95950759
E-mail: chmninfo@eaton.com

JAPAN
Cooper Crouse-Hinds Japan KK,
MT Building 3F, 2-7-5 Shiba Daimon, Minato-ku,
Tokyo, Japan 105-0012

Tel: +81 (0)3 6430 3128 Fax: +81 (0)3 6430 3129
E-mail: mtl-jp@eaton.com

NORWAY
Norex AS
Fekjan 7c, Postboks 147,
N-1378 Nesbru, Norway

Tel: +47 66 77 43 80 Fax: +47 66 84 55 33
E-mail: info@norex.no

RUSSIA
Cooper Industries Russia LLC
Elektrozavodskaya Str 33
Building 4
Moscow 107076, Russia

Tel: +7 (495) 981 3770 Fax: +7 (495) 981 3771
E-mail: mtlrussia@eaton.com

SINGAPORE
Cooper Crouse-Hinds Pte Ltd
No 2 Serangoon North Avenue 5, #06-01 Fu Yu Building
Singapore 554911

Tel: +65 6645 9864 / 6645 9865 Fax: +65 6 487 7997
E-mail: sales.mtlsing@eaton.com

SOUTH KOREA
Cooper Crouse-Hinds Korea
7F. Parkland Building 237-11 Nonhyun-dong Gangnam-gu,
Seoul 135-546, South Korea.

Tel: +82 6380 4805 Fax: +82 6380 4839
E-mail: mtl-korea@eaton.com

UNITED ARAB EMIRATES
Cooper Industries/Eaton Corporation
Office 205/206, 2nd Floor SJ Towers, off. Old Airport Road,
Abu Dhabi, United Arab Emirates

Tel: +971 2 44 66 840 Fax: +971 2 44 66 841
E-mail: mtlgulf@eaton.com

UNITED KINGDOM
Eaton Electric Ltd,
Great Marlings, Butterfield, Luton
Beds LU2 8DL

Tel: +44 (0)1582 723633 Fax: +44 (0)1582 422283
E-mail: mtlenquiry@eaton.com

AMERICAS
Cooper Crouse-Hinds MTL Inc.
3413 N. Sam Houston Parkway W.
Suite 200, Houston TX 77086, USA

Tel: +1 281-571-8065 Fax: +1 281-571-8069
E-mail: mtl-us-info@eaton.com

Powering Business Worldwide

Eaton Electric Limited,
Great Marlings, Butterfield, Luton
Beds, LU2 8DL, UK.
Tel: + 44 (0)1582 723633 Fax: + 44 (0)1582 422283
E-mail: mtlenquiry@eaton.com
www.mtl-inst.com

© 2017 Eaton
All Rights Reserved
Publication No. INM9101 Rev 3 310117
January 2017

EUROPE (EMEA):
+44 (0)1582 723633
mtlenquiry@eaton.com

THE AMERICAS:
+1 800 835 7075
mtl-us-info@eaton.com

ASIA-PACIFIC:
+65 6 645 9888
sales.mtlsing@eaton.com

The given data is only intended as a product description and should not be regarded as a legal warranty of properties or guarantee. In the interest of further technical developments, we reserve the right to make design changes.