Instruction manual
MTL fieldbus networks

January 2017
INM9108 Rev 3

CROUSE-HINDS
SERIES

9108-22

4-segment, redundant FISCO power supply system for Yokogawa Centum CS 3000 Control Systems

Powering Business Worldwide

Declaration of Conformity

A printed version of the Declaration of Conformity has been provided separately within the original shipment of goods. However, you can find a copy of the latest version at http://www.mtl-inst.com/certificates

CONTENTS

DECLARATION OF CONFORMITY II

GENERAL SAFETY INFORMATION IV

1 OVERVIEW 1

2 DESCRIPTION 1

2.1 Architecture 1

2.2 Module carrier 3

3 INSTALLATION 3

3.1 General 3

3.2 Required tools 3

3.3 Mounting overview 3

3.4 Surface mounting 5

3.5 Mounting Power Supply & SAM modules 5

4 ELECTRICAL INSTALLATION 6

4.1 Redundant Power Connections 6

4.2 Alarm Connections 6

4.3 Hazardous-Area Fieldbus Segment Connections 7

4.4 Control System Cable Connections 8

5 TESTING AND FAULT FINDING 8

5.1 Testing 8

5.2 Manual Failover testing 9

5.3 LED Indicators 9

6 APPENDIX : ATEX CERTIFICATION INFORMATION 10

6.1 General 10

6.2 Installation 10

6.3 Inspection and maintenance 10

6.4 Repair 10

6.5 Marking 10

GENERAL SAFETY INFORMATION

Safety instructions for installation and operating personnel

See Appendix on ATEX certification for countries in EEC, or governed by these standards.

The operating instructions provided here contain **essential safety instructions** for installation personnel and those engaged in the operation, maintenance and servicing of the equipment.

WARNING !
Failure to comply with these instructions can endanger the lives or health of personnel and risk damage to the plant and the environment.

WARNING !
The responsibility for planning, installation, commissioning, operation and maintenance, particularly with respect to applications in explosion-hazard areas, lies with the plant operator.

Before commencing installation or commissioning:

- Read and understand the contents of this manual
- Ensure installation and operating personnel have received adequate training for this task
- Ensure that any operating instructions are fully understood by the personnel responsible.
- Observe national and local installation and mounting regulations (e.g. IEC 60079-14).

WARNING !
These assemblies may not be used in explosion-hazard area applications if they have been used previously in general electrical installations.

During operation:

- Make the relevant instructions available at all times to the operating personnel.
- Observe safety instructions.
- Observe national safety and accident prevention regulations.
- Operate the equipment within its published specification.
- Servicing, maintenance work or repairs not described in this manual must not be performed without prior agreement with the manufacturer.
- Any damage to this equipment may render its explosion protection null and void.
- No changes to any of the components that might impair their explosion protection are permitted.

If any information provided here is not clear:

- Contact Eaton's MTL product line or one of its representatives.

Note: Improper installation and operation of the enclosure can result in the invalidation of the guarantee.

Related documents

Datasheet	Description
EPS9108-22	4-segment, redundant, FISCO power supply system for Yokogawa CENTUM CS3000 Control Systems

9108-22 - 4-segment, redundant FISCO power supply system for Yokogawa CENTUM CS 3000 control systems

Figure 1.1 9108-22 power supply assembly

1 OVERVIEW

The 9108-22 system is specifically designed for connection to Yokogawa CENTUM CS 3000 control systems equipped with ALF111 FOUNDATION fieldbus™ communication modules. It provides intrinsically safe power for four FOUNDATION fieldbus™ H1 segments in Gas Groups IIB hazardous areas. The output of the power supply modules complies with the Fieldbus Intrinsically Safe Concept (FISCO) model, in accordance with IEC standard 60079-27 Edition 2.0 (2008). The key advantages of FISCO over earlier 'Entity' model installations to FF-816 are higher available field current and reduced safety documentation, while retaining the ability to conduct maintenance while energised and without 'gas clearance'.

The 9108-22 system uses the MT 9122-IS range of power supplies, which have become established as the industry standard solution for FISCO networks. The 9108-22 system delivers even higher levels of overall system availability by providing redundancy of the power modules.

When used with intrinsically safe versions of MTL Megablock field wiring hubs, the power supply system allows complete FISCO networks to be assembled for even the most demanding process applications.

This manual provides information for the installation and maintenance of the 9108-22 redundant FISCO power supply. The datasheet part number for this model is shown on the opposite page.

2 DESCRIPTION

2.1 Architecture

Each of the four fieldbus segments receives its power from a redundant pair of pluggable FISCO power supply modules- see Figure 2.1. These power supply modules operate in active/hot standby mode, ensuring that the fieldbus segments are continually powered.

In the event of the failure of the active power supply module output, the field circuit is automatically transferred to the standby module. The change-over is managed by Supply Arbitration Modules (SAMs), which monitor the health of the FISCO power supplies while maintaining intrinsic safety requirements during the transition to the standby module. The SAMs are also duplicated and replaceable, meaning that there are no non-redundant system components.

Switch-over is achieved rapidly and in accordance with FOUNDATION fieldbus™ specifications, and without risk of losing fieldbus devices from the bus. A combination of LED diagnostics and alarm signalling provides failure notification of FISCO power supplies and SAMs, allowing failed hardware to be identified and full redundancy to be restored by module replacement.

Figure 2.1
9108-22
architecture
per segment

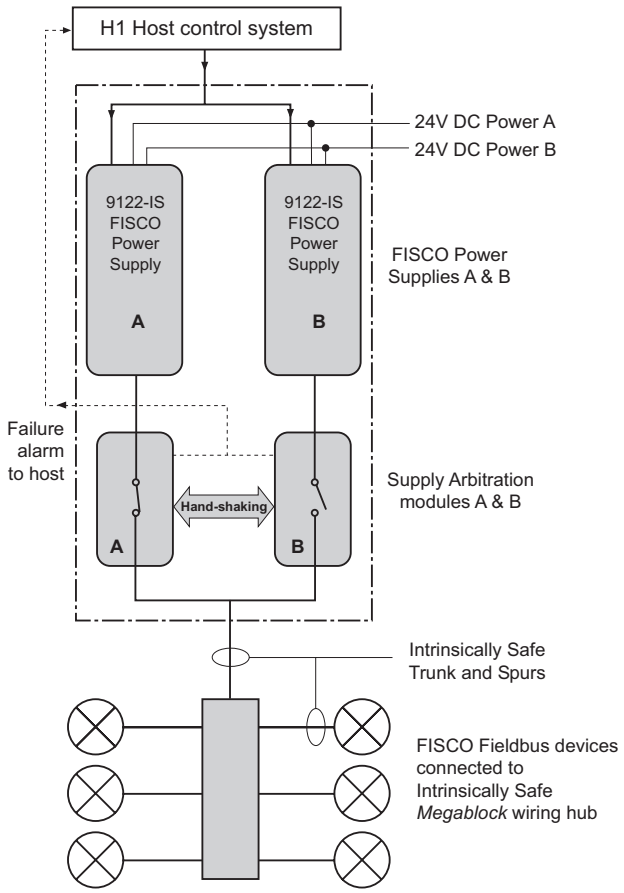

Figure 2.2
9108-22
assembly
dimensions

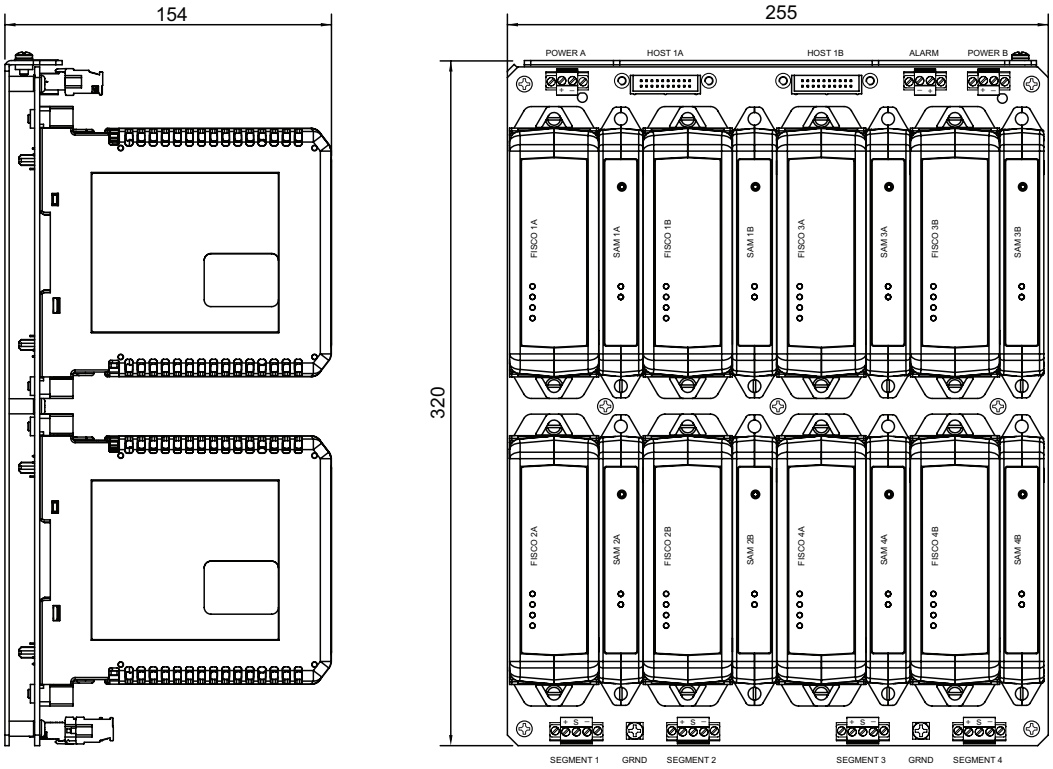

2.2 Module carrier

The module carrier provides fieldbus power for four fieldbus segments. It supports a pair of redundant pluggable power supply and arbitration modules for each segment and all connection facilities.

Each carrier has connections for redundant 24V input power supplies, ALF111 fieldbus communication modules via AKB336 cables and intrinsically safe field trunks. A volt-free failure alarm is also provided for connection to a digital input module in the host control system. There are no active electronic circuits on the carrier, resulting in long calculated Mean Time to Failure (MTTF) and overall high system availability.

The carrier dimensions (Figure 2.2) are designed to provide high packing density in typical 800mm wide equipment cabinets. Survival in high-vibration marine environments is achieved by secure panel-mount fixings.

The FISCO power supply modules are pluggable versions of the MTL 9122-IS units applications, and support the same level of features. These include a built-in repeater function for accurate wave-shape transmission and communication error reduction, and three-way isolation between bulk power, host and field trunks for elimination of cross-talk between segments. LED indicators provide information on system health and assist with fault diagnosis.

3 INSTALLATION

WARNING	**WARNING !** This equipment must be installed, operated and maintained only by trained competent personnel and in accordance with all appropriate international, national and local standard codes of practice and site regulation for intrinsically safe apparatus and in accordance with the instructions contained here.

3.1 General

The 9108-22 power system may be mounted in a safe area or a Zone 2 IIB T4 hazardous area. See also Section 6 - Appendix for further information. The mounting conditions must:

a. prevent any form of pollution that could compromise the operation of the unit. For example, an unpolluted location or a suitable enclosure could be chosen.

b. provide an adequate level of mechanical protection. This can be achieved by selecting a protected location, a suitable cabinet or enclosure, or a combination of both.

c. ensure that all cable entries and connections are secure by making provision for the careful routing and securing of all cables.

d. provide adequate security against unauthorised interference.

e. ensure that the permitted ambient temperature range of the units (–20°C to +60°C) is not exceeded. Be aware of the power dissipation in the equipment's cabinet or enclosure and consider the use of shading against direct sunlight, or even forced cooling.

3.2 Required tools

To remove or replace a FISCO or a SAM module a straight-bladed screwdriver is required with a minimum shaft length of 130mm (5¼") and a maximum blade diameter of 5mm (3/16").

3.3 Mounting overview

Mount the 9108-22 assembly on a vertical surface with the orientation shown in Figure 2.2. Any other orientation will reduce the permitted maximum operating temperature.

IMPORTANT: The mounting surface and any fixings must be capable of supporting the weight of the complete assembly which is just under 5.5kg.

Four 7mm diameter slotted holes are provided in the backplate for mounting the assembly - see Figure 3.1 - and access to the mounting screws is provided through the circuit board (after removal of some modules). This feature allows the assembly to be fitted to, or removed from, its mounting without removing the mounting screws.

Note: Because of the slotted mounting holes, 15mm of free space is required above the top edge of the assembly to allow the backplate to be mounted and demounted.

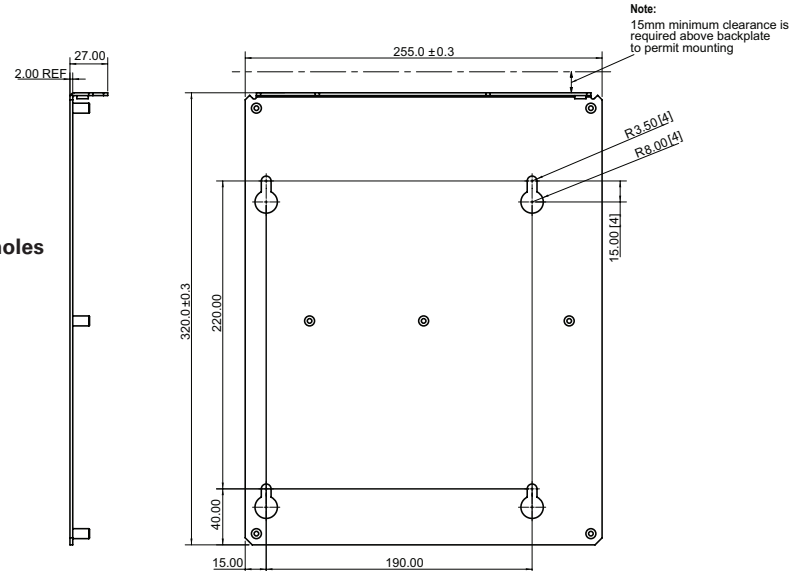

Figure 3.1 Baseplate mounting holes

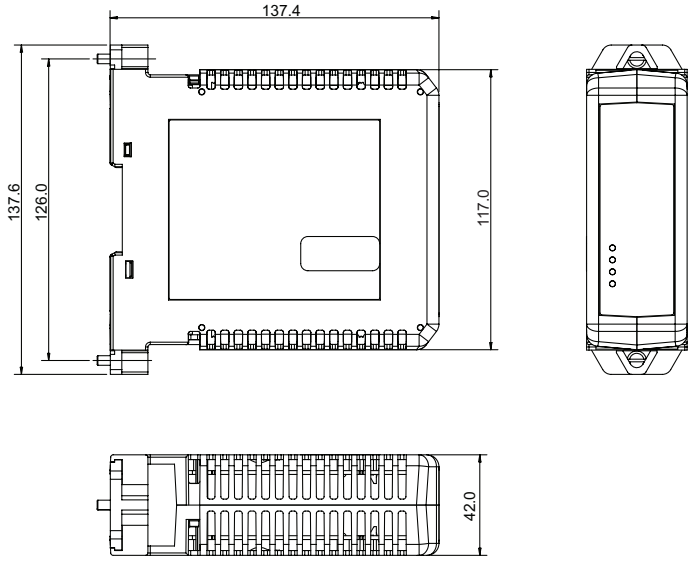

Figure 3.2 9122-IS-CM power supply module dimensions

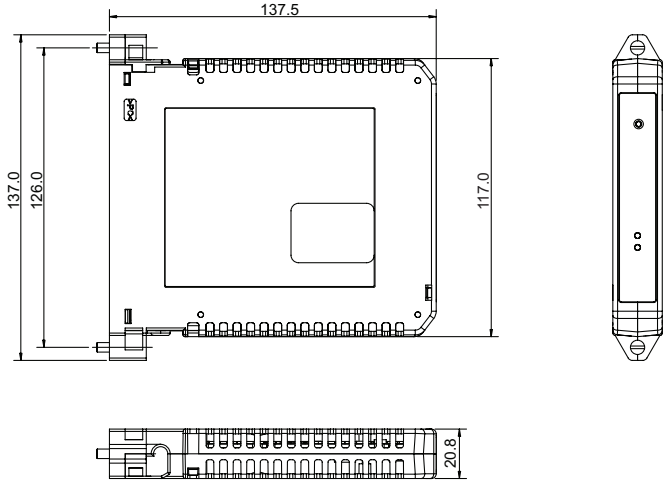

Figure 3.3 9129-IS Supply Arbitration Module (SAM) dimensions

3.3.1 Outdoor mounting

If the assembly is to be mounted in an outdoor location, a suitable enclosure with a minimum of IP54 ingress protection is required. However, in some locations, a higher degree of ingress protection rating is recommended as corrosion resistance may be necessary or desirable and the emphasis should be placed on the suitability for the application.

3.4 Surface mounting

Prepare holes in the mounting surface at the centres shown in Figure 3.1. Thread the holes M6 or fit M6 captive nuts as required.

The recommended fixing method for this assembly uses M6 Sems screws; or some similar captive washer screw assembly. Alternatively, take four M6 screws - recommended minimum length 15mm - and fit a locking washer and a plain washer on each.

Start the screws into the surface fixing holes, leaving approximately 10mm clear thread visible.

With all modules removed from the assembly, fit the backplate, and its attached circuit board, over the four screw-heads (and washers) and allow it to rest on the four screws. Tighten the four screws to a minimum torque of 4 Nm, to secure the backplate to the mounting surface.

3.5 Mounting Power Supply & SAM modules

CAUTION
Fitting or removal of modules must not be performed in a hazardous area or environment without first isolating the supply.

The SAM module has a mechanical safety interlock to prevent it from being removed before its associated power supply; this is so that the segment power stays in a safe and predictable state. This interlock must not be removed or defeated in any way.

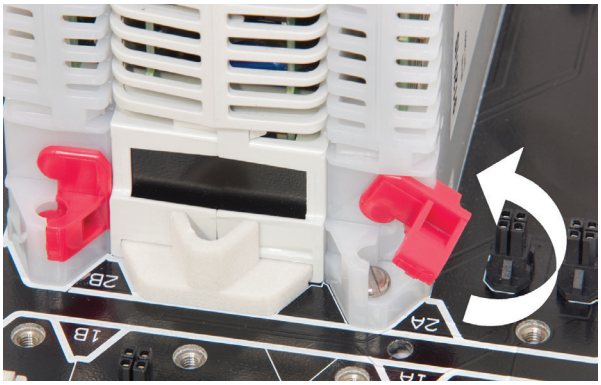

Figure 3.4 SAM module interlock tab

3.5.1 Fitting modules

The SAM module must be fitted before its related FISCO power supply module.

1. Rotate the red interlock tab on the SAM module to the side and up to reveal the fixing screw head. See Figure 3.4.
2. Locate the SAM module in its position and tighten both of its fixing screws.
3. Return the interlock tab to cover the screw head. See Figure 3.4
4. Locate the FISCO power supply module to the left of the SAM module and tighten both of its fixing screws.
5. Repeat 1 - 4 for the other module pairs, as required.

Note: If a FISCO power supply module position is left vacant it will cause an alarm condition to be signalled at the **Alarm** contacts. To prevent this a 9127-BLK blanking module can be fitted in the position normally occupied by the associated SAM module. See Section 4.2.1 for further details.

3.5.2 Removing modules

The FISCO power supply module must be removed before its related SAM module.

1. Loosen the two fixing screws of the FISCO power supply module and remove it from the circuit board.
2. Slide the red interlock tab on the SAM module to the side to reveal the fixing screw head. See Figure 3.4
3. Loosen the two fixing screws of the SAM module and remove it from the circuit board.
4. Repeat 1 - 3 for the other module pairs, as required.

4 ELECTRICAL INSTALLATION

4.1 Redundant Power Connections

The POWER A and POWER B connectors receive the redundant 19.2 - 30V input power supplies. These connectors are keyed to prevent insertion into the Alarm socket on the carrier. Correct operation requires both input power supplies to be present in order to avoid an alarm signal being generated.

Note: *To comply with product certification, both power connections are required to have their connector plugs in place - see Power B in Figure 4.1 - and Section 6 - Appendix.*

Each input power supply must be able to support, independently, the power requirements of four fieldbus segments; which, with a power supply voltage of 24V and with all four running at maximum load requires a total current of 2.5A .

The user may determine how many 9108-22 assemblies are operated from each bulk power supply, but adequate protective fusing is recommended to protect both the supplies and the assemblies.

Connect the incoming power supplies to the POWER A and POWER B screw terminal connectors at the top edge of the assembly circuit board. See Figure 2.2. Observe the supply polarities indicated beside the connectors on the circuit board. See Figure 4.1.

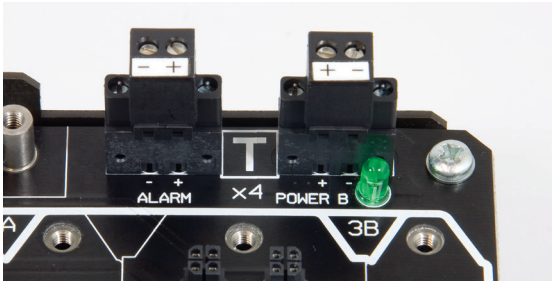

Figure 4.1 POWER B and ALARM connectors

4.1.1 Backplate Grounding

A separate connection must be made from the ground terminal provided on the backplate to the enclosure's protective ground to ensure that the backplate is in good electrical contact with the enclosure and its protective ground.

4.2 Alarm Connections

Each SAM module contains a solid state switch that is '**closed**' in **normal operation** and exhibits in this condition a maximum resistance of 45W. If a SAM module recognises a fault condition its switch will 'open' and present a resistance in excess of 1MΩ.

The eight SAM modules (two per segment) are all connected in series and the ends presented at

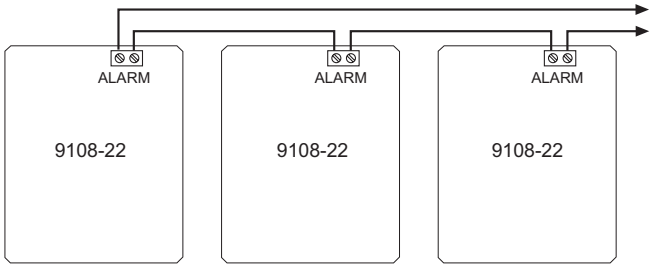

Figure 4.2 Daisy-chaining ALARM circuits

the ALARM connector at the top edge of the module carrier - See Figure 4.1. In normal operation, therefore, the ALARM terminals on the module carrier will present a nominal resistance value of 360Ω.

If required, the alarm circuits of a number of 9108-22 assemblies can be daisy-chained to present a single alarm signal. See Figure 4.2. In order to do this, the digital input module being used to receive the alarm signal must be able to recognise the total series resistance of all the carriers as a normal 'closed' condition. For example, three carriers connected in series will present a series resistance in the 'closed' condition of around 1080Ω.

Notes:

1. Although the Alarm terminals on the module carrier are marked '+' and '–' to aid identification, the solid state alarm circuits are polarity insensitive.
2. The Alarm connector is keyed to prevent it being inserted into a Power socket on the board.
3. For the alarm circuit to operate correctly, (i.e. for the solid state switches to go to a 'closed' condition), all eight FISCO power supply and SAM modules must be installed on the module carrier.
4. To comply with product certification, the Alarm connector plug must be in place - see Figure 4.1 and Section 6 - Appendix.

4.2.1 9127-BLK blanking module

If a FISCO power supply module is omitted or removed from the 9108-22 backplane, its SAM module will automatically trigger the alarm circuit, as described above. To avoid this, a 9127-BLK blanking module is available, which is the same size and shape as a SAM, and should be used in place of the SAM module to maintain alarm circuit continuity and prevent the creation of an alarm.

In addition, it is important that a 9127-BLK blanking module is fitted in every unused SAM location on the carrier in order to allow the system to recognise alarms from the active modules fitted.

4.3 Hazardous-Area Fieldbus Segment Connections

The intrinsically safe segment power output connections are provided via 3-way, pluggable, rising cage clamp, screw terminals at the bottom edge of the 9108-22 module carrier. See Figure 2.2 and 4.3.

Prepare the cables and connect to the +ve and –ve terminals as indicated on the pluggable connectors.

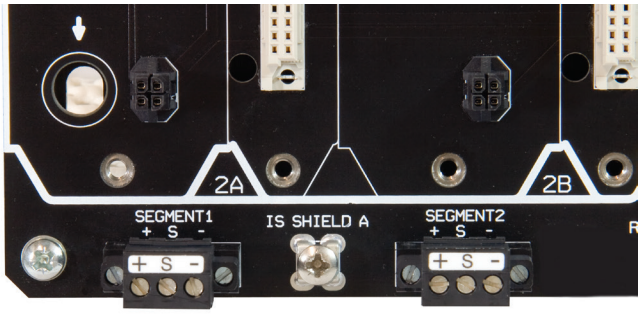

Figure 4.3 Segment connectors and ground/shield stud

Note: It is important during installation to **segregate intrinsically safe wiring from other non-intrinsically safe wiring** and to mark it clearly as intrinsically safe.

Two ground studs (IS Shield A and IS Shield B) are provided on the module carrier, adjacent to the hazardous area field wiring connections. These provide a means of grounding the cable screens/shields of the intrinsically safe field cables carrying the fieldbus trunks. If they are to be used to ground the field cable shields, the following procedure should be adopted:

- Connect the shield of each field cable to the 'S' terminal on its 3-way pluggable connector
- Connect each of the ground studs on the module carrier to a local, high integrity earth with a cable having a resistance of less than 1 ohm. This should be a clean 'instrument' earth

that is electrically bonded to the point of earthing of the local 230V AC power supply to the equipment cabinet that houses the FISCO power supplies. The two studs should be wired with separate cables, each having a cross-sectional area of 4mm² or greater.

Note: To comply with product certification, all segment connections are required to have their connector plugs in place - as seen in Figure 4.3 - see also Section 6 - Appendix.

4.3.1 Field segment terminators

Near-end termination of the intrinsically safe field segments is automatically provided in the FISCO power supplies. Far-end termination must be provided in the field junction box for each segment, for example by selecting Megablock wiring hubs with built-in terminators.

4.4 Control System Cable Connections

Redundant control system terminals are provided at the top of the board for connection to ALF111 Fieldbus Interface modules. These terminals, marked HOST 1A and HOST 1B accept standard Yokogawa AKB336 cables. The 9108-CA is supplied with blanking plates fitted over both of these connectors; unscrew and remove a blanking plate to enable a host cable connector to be inserted.

Note: To comply with product certification, an unused host connector (HOST 1A or HOST 1B) must have its (supplied) blanking plate in place - see also Section 6 - Appendix.

4.4.1 Host segment terminators

Terminators for each of the four host segments are provided on the module carrier, not in the

Figure 4.4 Host connectors

FISCO power supply. (This ensures that the terminator is not lost, or duplicated, when the power supply modules are switched or removed from the carrier.)

In addition, because of the short length of the AKB336 cables between the ALF111 Interface modules and the 9108-22 assembly, the host end termination is incorporated in the same terminator. This method ensures the correct impedance is presented to the host. Therefore, a Fieldbus Terminator (type YCB138) should not be connected at the H1 terminals of each segment on the ALF111 communication modules

5 TESTING AND FAULT FINDING

The 9108-22 is provided with switches and LED indicators to enable the user to understand the status of the equipment at any time. The functionality of these diagnostic aids is described in this section.

5.1 Testing

After installation, or during maintenance checks, the measured output voltage at the segment terminals should not be less than 12.9V DC*. This, and many other useful fieldbus parameters, can be measured with the MTLFBT-6 portable tester, which also has the advantage of being certified for use in Zone 1 hazardous area.

* for ambient temperatures of > 20°C

Figure 5.1 SAM failover switch button

5.2 Manual Failover testing

Each Supply Arbitration Module (SAM) has a 'Failover' switch to test the functioning of the failover mechanism from Active to Standby power supply. This is for proof-testing of the power supply as part of a scheduled maintenance program.

CAUTION
Forcing a change of state of the active and standby modules by manually operating the 'Failover' push button is recommended only during plant shutdown, not during the operation of a live process application.

A manual changeover is caused by pressing the Failover switch on the Active SAM. Pressing the Failover switch on the Standby SAM will have no effect.

Note: The default startup configuration always makes the 'A' power supply active. 'A' and 'B' modules are identifiable from silkscreen markings on the circuit board or see Figure 2.2

To confirm the Failover action of a redundant pair - with the 'A' power supply active:

1. Press the Failover switch on the 'A' SAM to force the Standby 'B' power supply to become the Active one.
2. Press the Failover switch on the 'B' SAM to force the 'A' power supply to become the Active one again.

Failover will NOT occur if the Standby power supply, or its associated SAM is in a 'failed' condition; indicated by both the Active and Standy LEDs being extinguished, or by either of them flashing - see Section 5.3.2.

5.3 LED Indicators

5.3.1 Power A and Power B indicators

LED indicators are provided beside the POWER A and the POWER B connectors; these indicate the presence of applied voltage at the respective connectors - see Figure 4.1.

	OFF	ON
Power (green)	Power fail	Power OK

Table 5.1: Power input LED functions

5.3.2 FISCO power supply indicators

Four LED indicators are provided on the front panel of the 9122-IS-CM FISCO Power Supply. The function of these indicators is provided in Table 5.1 below. The normal "healthy" state is indicated by the shaded boxes in the table.

	OFF	ON
Power (green)	Power fail or internal fault	Power OK
Fault (red)	Normal	Fault
Host (yellow)	Comms failure	Comms OK
IS (yellow)	Comms failure	Comms OK

Table 5.2: Power module LED functions

5.3.2 Supply Arbitration Module indicators

Two LED indicators are provided on the front panel of the 9129-IS SAM module to indicate its current mode. The function of these indicators is given in Table 5.2 below. "Healthy" states are indicated by the shaded boxes in the table.

Active Mode	**Active LED - ON**	Standby LED - OFF
Standby Mode	Active LED - OFF	**Standby LED - ON**
Fault/Alarm Mode	Active LED or Standby LED - OFF or FLASHING*	

Table 5.3: SAM LED functions

* Note: During startup, either of the LEDs may flash for up to 10 seconds - this is normal operation.

6 APPENDIX : ATEX CERTIFICATION INFORMATION

The following information is in accordance with the Essential Health and Safety Requirements (Annex II) of the EU Directive 2014/34/EU [the ATEX Directive - safety of apparatus] and is provided for those locations where the ATEX Directive is applicable.

6.1 General

a. This equipment must only be installed, operated and maintained by competent personnel. Such personnel shall have undergone training, which included instruction on the various types of protection and installation practices, the relevant rules and regulations, and on the general principles of area classification. Appropriate refresher training shall be given on a regular basis. [See clause 4.2 of EN 60079-17].

b. This equipment has been designed to provide protection against all the relevant additional hazards referred to in Annex II of the directive, such as those in clause 1.2.7.

c. This equipment has been designed to meet the requirements of associated electrical apparatus in accordance with EN 60079-11, EN 60079-0.

6.2 Installation

a. The installation must comply with the appropriate European, national and local regulations, which may include reference to EN 60079-14. In addition, particular industries or end users may have specific requirements relating to the safety of their installations and these requirements should also be met. For the majority of installations the Directive 1999/92/EC [the ATEX Directive - safety of installations] is also applicable.

b. Unless already protected by design, this equipment must be protected by a suitable enclosure against:
   i) mechanical and thermal stresses in excess of those noted in the certification documentation and the product specification,
   ii) aggressive substances, excessive dust, moisture and other contaminants.

c. To comply with the product's IP20 rating the following points must be noted.
   i) all power connector plugs, segment connector plugs and the alarm connector plug must be in place.
   ii) an unused host connector (HOST 1A or HOST 1B) must have its blanking plate in place.

6.3 Inspection and maintenance

Inspection and maintenance should be carried out in accordance with European, national and local regulations which may refer to EN 60079-17. In addition specific industries or end users may have specific requirements which should also be met.

6.4 Repair

This equipment cannot be repaired by the user. If the 9108-CA circuit board or any one of the modules is suspected of being defective it must be replaced with an equivalent certified product.

6.5 Marking

The product is marked in compliance with the Directive and CE marked with the Notified Body Identification Number.

This information applies to products manufactured during or after the year 2009.

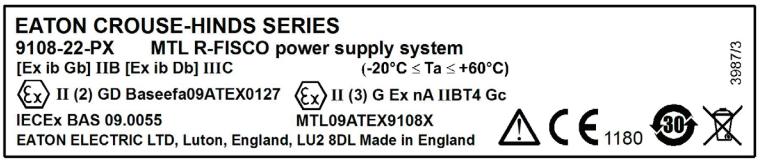

This page is left intentionally blank

AUSTRALIA
MTL Instruments Pty Ltd,
10 Kent Road, Mascot, New South Wales, 2020, Australia

Tel: +61 1300 308 374 Fax: +61 1300 308 463
E-mail: mtlsalesanz@eaton.com

BeNeLux
MTL Instruments BV
Ambacht 6, 5301 KW Zaltbommel
The Netherlands

Tel: +31 (0)418 570290 Fax: +31 (0)418 541044
E-mail: mtl.benelux@eaton.com

CHINA
Cooper Electric (Shanghai) Co. Ltd
955 Shengli Road, Heqing Industrial Park
Pudong New Area, Shanghai 201201

Tel: +86 21 2899 3817 Fax: +86 21 2899 3992
E-mail: mtl-cn@eaton.com

FRANCE
MTL Instruments sarl,
7 rue des Rosiéristes, 69410 Champagne au Mont d'Or
France

Tel: +33 (0)4 37 46 16 53 Fax: +33 (0)4 37 46 17 20
E-mail: mtlfrance@eaton.com

GERMANY
MTL Instruments GmbH,
Heinrich-Hertz-Str. 12, 50170 Kerpen, Germany

Tel: +49 (0)22 73 98 12- 0 Fax: +49 (0)22 73 98 12- 2 00
E-mail: csckerpen@eaton.com

INDIA
MTL India,
No.36, Nehru Street, Off Old Mahabalipuram Road
Sholinganallur, Chennai- 600 119, India

Tel: +91 (0) 44 24501660 /24501857 Fax: +91 (0) 44 24501463
E-mail: mtlindiasales@eaton.com

ITALY
MTL Italia srl,
Via San Bovio, 3, 20090 Segrate, Milano, Italy

Tel: +39 02 959501 Fax: +39 02 95950759
E-mail: chmninfo@eaton.com

JAPAN
Cooper Crouse-Hinds Japan KK,
MT Building 3F, 2-7-5 Shiba Daimon, Minato-ku,
Tokyo, Japan 105-0012

Tel: +81 (0)3 6430 3128 Fax: +81 (0)3 6430 3129
E-mail: mtl-jp@eaton.com

NORWAY
Norex AS
Fekjan 7c, Postboks 147,
N-1378 Nesbru, Norway

Tel: +47 66 77 43 80 Fax: +47 66 84 55 33
E-mail: info@norex.no

RUSSIA
Cooper Industries Russia LLC
Elektrozavodskaya Str 33
Building 4
Moscow 107076, Russia

Tel: +7 (495) 981 3770 Fax: +7 (495) 981 3771
E-mail: mtlrussia@eaton.com

SINGAPORE
Cooper Crouse-Hinds Pte Ltd
No 2 Serangoon North Avenue 5, #06-01 Fu Yu Building
Singapore 554911

Tel: +65 6645 9864 / 6645 9865 Fax: +65 6 487 7997
E-mail: sales.mtlsing@eaton.com

SOUTH KOREA
Cooper Crouse-Hinds Korea
7F. Parkland Building 237-11 Nonhyun-dong Gangnam-gu,
Seoul 135-546, South Korea.

Tel: +82 6380 4805 Fax: +82 6380 4839
E-mail: mtl-korea@eaton.com

UNITED ARAB EMIRATES
Cooper Industries/Eaton Corporation
Office 205/206, 2nd Floor SJ Towers, off. Old Airport Road,
Abu Dhabi, United Arab Emirates

Tel: +971 2 44 66 840 Fax: +971 2 44 66 841
E-mail: mtlgulf@eaton.com

UNITED KINGDOM
Eaton Electric Ltd,
Great Marlings, Butterfield, Luton
Beds LU2 8DL

Tel: +44 (0)1582 723633 Fax: +44 (0)1582 422283
E-mail: mtlenquiry@eaton.com

AMERICAS
Cooper Crouse-Hinds MTL Inc.
3413 N. Sam Houston Parkway W.
Suite 200, Houston TX 77086, USA

Tel: +1 281-571-8065 Fax: +1 281-571-8069
E-mail: mtl-us-info@eaton.com

Powering Business Worldwide

Eaton Electric Limited,
Great Marlings, Butterfield, Luton
Beds, LU2 8DL, UK.
Tel: + 44 (0)1582 723633 Fax: + 44 (0)1582 422283
E-mail: mtlenquiry@eaton.com
www.mtl-inst.com

© 2017 Eaton
All Rights Reserved
Publication No. INM9108 Rev 3 300117
January 2017

EUROPE (EMEA):
+44 (0)1582 723633
mtlenquiry@eaton.com

THE AMERICAS:
+1 800 835 7075
mtl-us-info@eaton.com

ASIA-PACIFIC:
+65 6 645 9888
sales.mtlsing@eaton.com

The given data is only intended as a product description and should not be regarded as a legal warranty of properties or guarantee. In the interest of further technical developments, we reserve the right to make design changes.