Instruction manual
MTL signal conditioners

February 2025
INM 1000 Rev 10

CROUSE-HINDS
SERIES

MTL1000 range

Signal conditioning interfaces

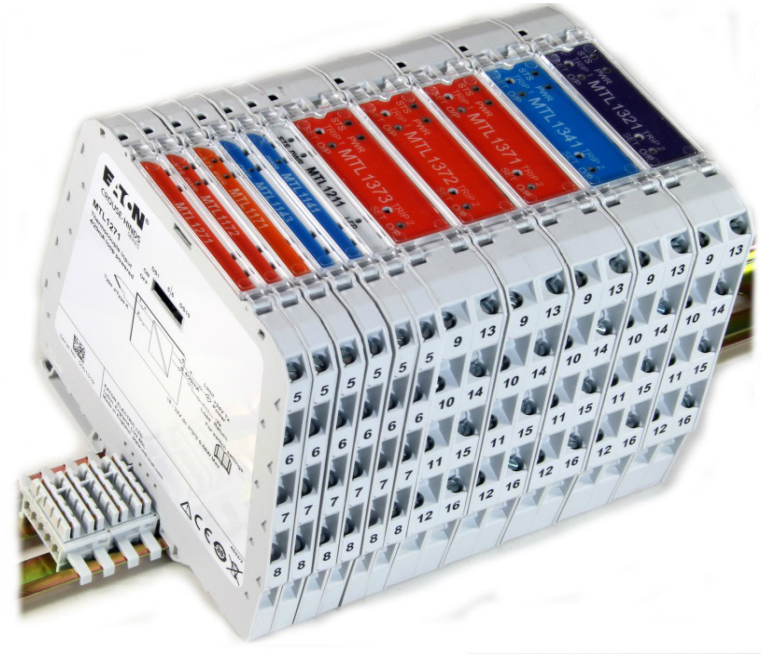

Powering Business Worldwide

DECLARATION OF CONFORMITY

A printed version of the Declaration of Conformity has been provided separately within the original shipment of goods. However, you can find a copy of the latest version at **http://www.mtl-inst.com/certificates**

CONTENTS

DECLARATION OF CONFORMITY. ii

1 INTRODUCTION. 1

1.1 General 1

2 MTL1000 RANGE DESCRIPTION. 1

2.1 Modules 1

2.2 Accessories 2

3 INSTALLATION PRECAUTIONS. 3

3.1 General 3

3.2 Installation 3

3.2.1 Modules 3

3.2.2 Cabinet and enclosure mounting 3

4 COMMON SPECIFICATIONS 4

5 MODULES. 5

5.1 MTL1991 Power feed and alarm module 5

5.2 Current repeaters 5

5.2.1 MTL1141 Transmitter repeater power supply 5

5.2.2 MTL1142 Transmitter repeater power supply with HART 6

5.2.3 MTL1143 Transmitter repeater power supply with HART and repeat output 6

5.2.4 MTL1144 voltage/current input, loop powered isolator 7

Table 1 MTL1144 switch settings 7

5.2.5 MTL1145 loop powered current repeater 7

5.3 MTL1171, 1172 Temperature and MTL1173 Potentiometer converters 8

Table 2 Configuration and DIP switch settings 9

Table 3 MTL1171 and MTL1172 range DIP switch setting 9

5.3.1 MTL1171 thermocouple input converter 10

5.3.2 MTL1172 RTD input converter 10

5.3.3 MTL1173 Potentiometer input converter 10

5.4 MTL1211 Switch / Proximity Detector input. 11

5.5 MTL1249 Current / Voltage input/output repeater 11

Table 4 MTL1249 Dip Switch settings 12

5.6 MTL1271 loop powered thermocouple input converter. 13

5.7 MTL1272 loop powered RTD temperature converter. 13

6 MTL13XX TRIP AMPLIFIERS 15

6.1 Introduction 15

6.2 Trip level Setting 15

6.3 Label Indicators / Switches. 15

6.4 Switch settings. 16

Table 1 Trip switch settings 16

Table 2 Trip switch MTL137x Configuration and DIP switch settings 16

Table 3 MTL1371 and MTL1372 range DIP switch settings 16

6.5 MTL1321 trip amplifier with voltage/current input and 4-20mA output. 16

Table 4 MTL1321 SW101 range switch settings 17

6.6 MTL1321 trip amplifier with voltage/current input and 4-20mA output 18

6.7 MTL1371 trip amplifier converter, thermocouple input/4-20mA output 18

6.8 MTL1372 trip amplifier converter, RTD input/4-20mA output 18

6.9 MTL1373 trip amplifier converter, Potentiometer input/4-20mA output 18

7 MAINTENANCE 20

7.1 Routine Maintenance 20

7.2 Enclosures 20

8 APPENDIX A 20

Table 1 Isolator current consumption for MTL1991 calculation @ 24V 21

IMPORTANT NOTE

This manual describes the installation and use of:

- MTL1000 range of isolating interfaces and accessories.

The MTL1000 products are designed to provide signal isolation and signal conversion between equipment and areas of a process plant.

	WARNING!
	This equipment must be installed, operated and maintained only by trained competent personnel and in accordance with all appropriate international, national and local standard codes of practice and site regulations for process connected apparatus and in accordance with the instructions contained here.

The following methods are used on the product and in this manual to alert the user to important information:-

Caution - read the instructions

Caution - hot surface

MTL1000 range - signal conditioning interfaces

1 INTRODUCTION

1.1 General

This instruction manual describes the procedures for installing, connecting, checking and maintaining MTL1000 range of isolating interfaces and accessories. The MTL1000 products are designed to provide signal isolation and signal conversion between equipment and areas of a process plant.

Signal isolation eliminates or reduces the risk of earth loops, surges and noise, all of which can result in loss of signal integrity or damage to equipment. In addition, some modules offer the ability to convert signal types to provide level compatibility between system components.

2 MTL1000 RANGE DESCRIPTION

The MTL1000 range of modules and accessories is designed for use with process connected systems. It consists of compact isolating interface modules mounted on 35mm DIN rail. Power is provided through a DIN rail mounted power bus, to which, the isolator module is plugged into when clipped onto the DIN rail. Power is supplied to the isolators via a dedicated power feed module which also provides current limit protection in the event of a fault.

The MTL1000 range modules provide power and status information via LEDs on the top of the module. Where module configuration is required, then switches are accessed by the user through the side cover.

2.1 Modules

The table below lists the modules in the MTL1000 range:

MTL1991	Power feed and alarm module
MTL1141	Transmitter repeater power supply
MTL1142	Transmitter repeater power supply with HART passthrough
MTL1143	Transmitter repeater power supply with HART passthrough and repeat output
MTL1144	V/I to current repeater, loop powered
MTL1171	Thermocouple input converter
MTL1172	Resistance temperature device (RTD) converter
MTL1173	Potentiometer input converter
MTL1271	Thermocouple input converter, loop powered
MTL1272	RTD converter, loop powered
MTL1211	Switch / Proximity detector input
MTL1249	Signal converter, V/I to V/I
MTL1341	Transmitter repeater with 2ch trip
MTL1321	Trip amplifier with voltage/current input
MTL1371	Trip amplifier with Thermocouple input
MTL1372	Trip amplifier with RTD input
MTL1373	Trip amplifier with Potentiometer input

2.2 Accessories

PBUS6.2 DIN rail power bus connector for 2 module positions (pack of 10)

PBUS6.2-1 DIN rail power bus connector for 2 module positions (pack of 1)

PBUS6.2 & PBUS6.2-1

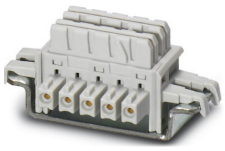

PBUS17.5 DIN power rail bus connector for 1 module position (pack of 10)

PBUS17.5-1 DIN power rail bus connector for 1 module position (pack of 1)

PBUS17.5 & PBUS17.5-1

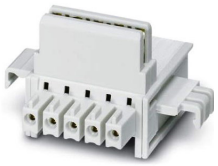

PBUS02 Power bus, direct connection terminals (1 set)

PBUS02

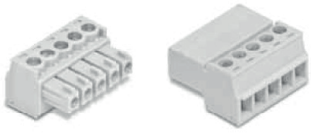

PBUS03 Module end stop

PBUS03

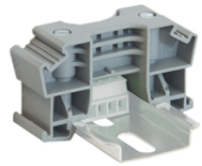

TH1000 Module tagging holder (pack of 20)

TH1000

TH1300 Module tagging holder for MTL13xx series. (pack of 10)

TH1300

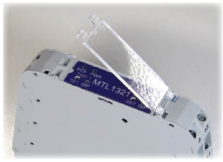

THR2 35mm x 7.5mm x 1m top hat standard DIN rail.

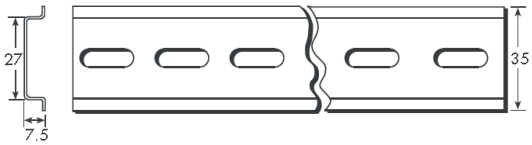

THR2

3 INSTALLATION PRECAUTIONS

3.1 General

This equipment must be installed, operated and maintained only by trained competent personnel and in accordance with all appropriate international, national and local standard codes of practice and site regulations for apparatus and in accordance with the instructions contained here.

3.2 Installation

3.2.1 Modules

All modules are DIN rail mounted in conjunction with the power bus connector. The power bus must be installed on the DIN first with the required number of slots for the modules that will be fitted. Each power bus connector powers 2 isolators. The MTL1991 power feed module, if used, will occupy one position. This may be located in any position. Power may be connected directly to the bus using the PBUS02 connector set. These are screw terminals that plug directly into the power bus at either end of the bus. The power supply should be of the transformer isolated type to obtain the secondary isolation required for SELV.

Modules are mounted on the DIN rail by clipping the foot, furthest from the release clip, on to the DINrail first. Rotate the module down onto the DIN rail and clip into place (Fig.1). To release, use a flatbladed screwdriver to release the module clip (Fig 2), hold module and rotate clip upwards. (Fig.3)

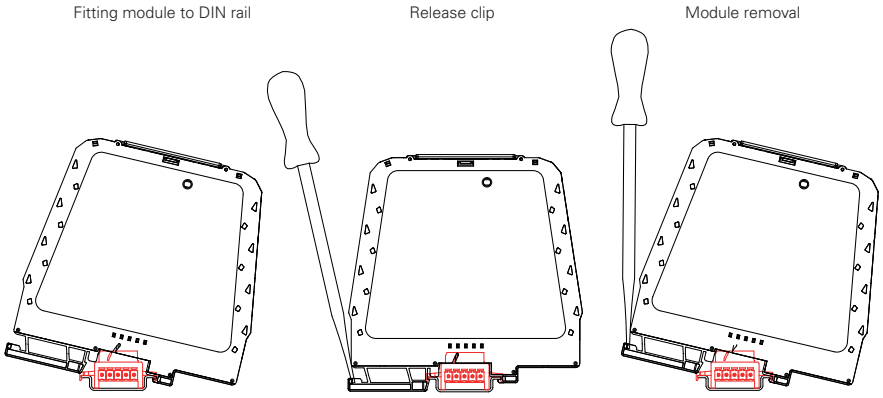

Fig. 1 Fig. 2 Fig. 3

3.2.2 Cabinet and enclosure mounting

The MTL1000 modules must be installed in a cabinet or enclosure with an impact rating of at least 6.5J. Consideration must be given to the management of the internal temperatures. Space must be provided around the modules to allow airflow. The optimum transfer of heat is attained when the DIN rail is mounted horizontally but vertical DIN rails may also be used where adequate space is available, especially in larger cabinets. Principle sources of heat, such as power supplies, should be located above the modules. An enclosure depth, measured from the base of the DIN rail, of at least 150mm is recommended. The absolute minimum is 115mm.

	CAUTION
	Exercise care when removing modules in operation from the middle of a group as the surface temperature on the side faces may be hot.

4 COMMON SPECIFICATIONS

For individual product specifications please refer to individual product specification sheets.

Terminals

Screw clamp. Conductors of up to 13AWG / 1.8mm dia. stranded or single-core copper.
Max torque 0.4Nm to 0.6Nm. Cable insulation strip /ferrule length 6-8mm
PBUS02 use wire type Solid / Stranded, 28 – 16 AWG / 0.14-1.3mm dia, – copper

Power supply voltage

18V to 32V DC SELV (UL listed where UL is applicable)

Isolation

250V ac or dc between power, field and system circuits.
tested to 1100Vac)

Mounting

T-section 35mm DIN rail (7.5mm or 15mm) to EN 50022

Ambient temperature limits

-20 to +60°C (-6 to +140°F) operating
-40 to +80°C (-40 to +176°F) storage

Humidity

5 to 95% relative humidity

Altitude

<2000m

Weight

6.2mm modules 120g
17.5mm modules 130g

EMC

EN61326 and NE21* Class A equipment

* For 20mS power interruption compliance, a suitable power supply must be used.

Dimensions

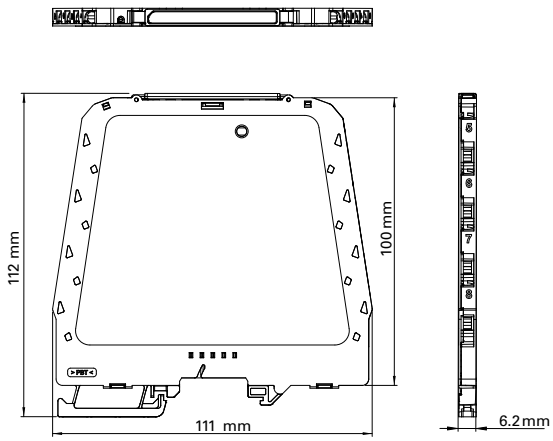

Fig. 1 MTL1000

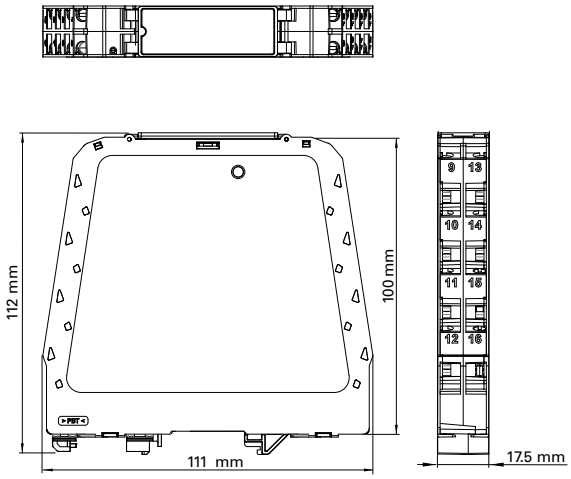

Fig. 2 MTL1300

5 MODULES

5.1 MTL1991 power feed and alarm module

The MTL1991 module is required to feed power to a group of MTL1000 range modules via the DIN rail power bus. Each power feed module provides reverse voltage protection and power monitoring. The power monitor relay provides a dry contact output which may be used for connection into a monitoring system or local indicator.

The number of isolators connected to any one power feed module must be assessed for power consumption. The maximum load current when feeding power via terminal 5 is 1A. If redundant power inputs are not required then terminal 6 may be used and a maximum load current of 2 A is acceptable. Check current consumption table in Appendix A for details. If power is fed directly into terminal 6 and external 3A time delay fuse must be fitted. Alarm relay contact rating is 40Vrms ac/dc 0.5A, resistive.

Where redundant power feeds are required, two MTL1991 modules are fitted with one power feed on each. The maximum load current is 1A.

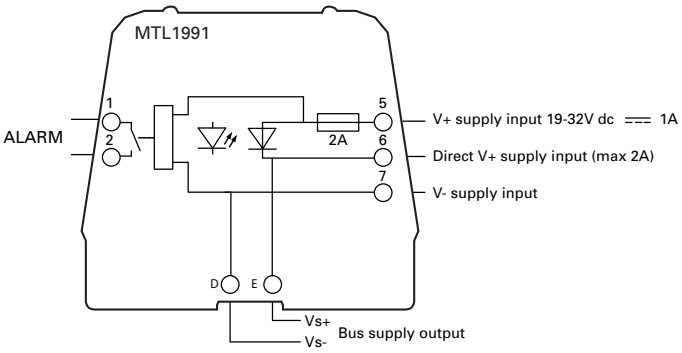

5.2 Current repeaters

5.2.1 MTL1141 transmitter repeater power supply

Before installing this modules check the connection requirements on the 'system' side of the module. The output may be configured to source or sink current. Current source is used when the input to the system is passive, ie there is no power supply present and it presents a resistive load. Current sink is used mainly with a '2 wire' transmitter input to the system where 'loop power' and 'input' terminals are provided. Terminal 6 on the MTL1141 is connected to the transmitter supply, and terminal 5 to the input. See Fig.4. Switch SW1 on the module must be set prior to installation. The module is supplied with the switch set in 'source' mode.

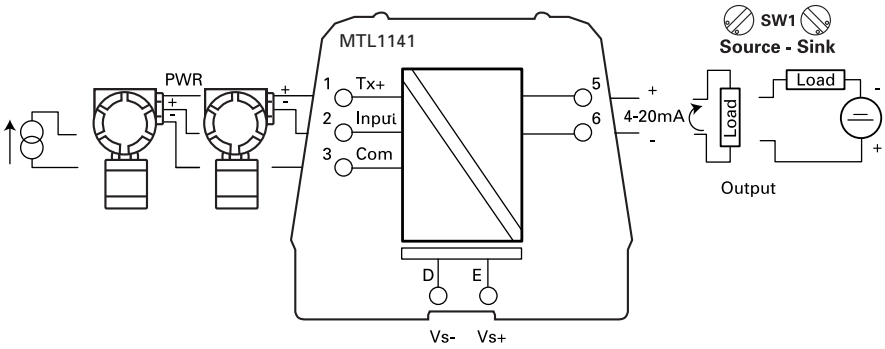

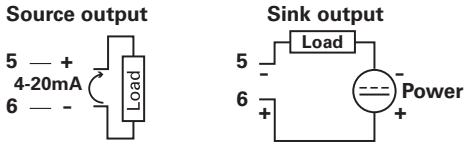

Fig. 4

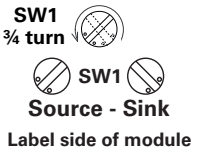

Fig. 5

5.2.2 MTL1142 transmitter repeater power supply with HART

Before installing this modules check the connection requirements on the 'system' side of the module. The output may be configured to source or sink current. Current source is used when the input to the system is passive, i.e. there is no power supply present and it presents a resistive load. Current sink is used mainly with a '2 wire' transmitter input to the system where 'loop power' and 'input' terminals are provided. Terminal 6 on the MTL1142 is connected to the transmitter supply, and terminal 5 to the input. Switch SW1 on the module must be set prior to installation. The module is supplied with the switch set in 'source' mode. HART communications are passed with both settings. In source mode the input impedance on the system input must be >240Ω for HART compliance.

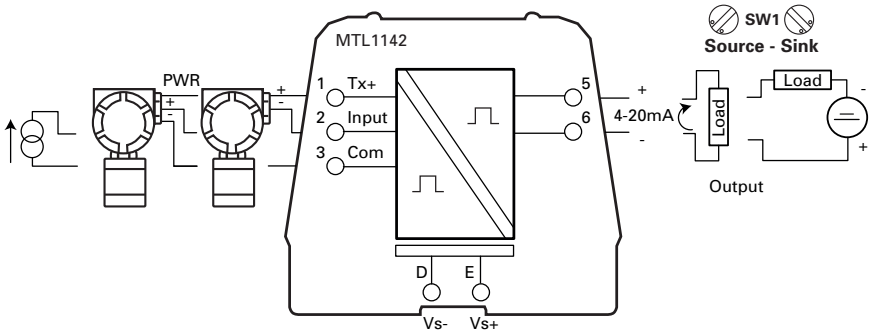

5.2.3 MTL1143 transmitter repeater power supply with HART and repeat output

Before installing this modules check the connection requirements on the 'system' side of the module. Output 1 is configured to source current into a load and provide HART communications passthrough.

Output 2 on terminals 7 and 8 generates a repeat 4-20mA signal to another device. This output provides a 4-20mA 'source' current to the system input. HART communication is not provided via this output.

An active current source may also be applied via terminals 2 and 3. HART communications are not provided when operating in this mode.

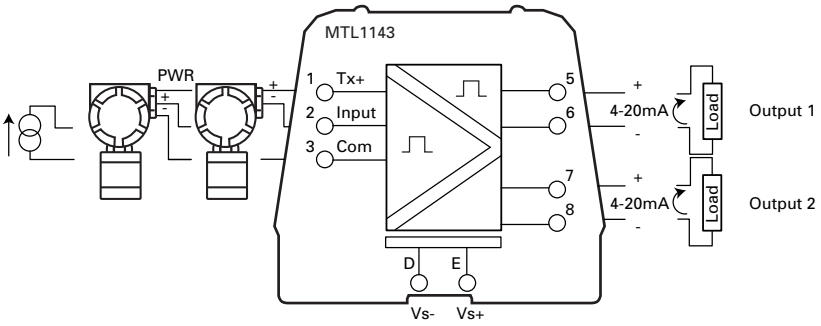

5.2.4 MTL1144 voltage/current input, loop powered isolator

The MTL1144 provides an interface to convert voltage or current signals into 4-20mA for connection to a system analogue input. Switches are used to select the required input range. The input terminals are chosen depending on signal type, 1 and 2 for voltage input and 2 and 4 for current input.

The maximum load resistance is dependent on the available power supply voltage.
Max load = 50(Vs-17)Ω

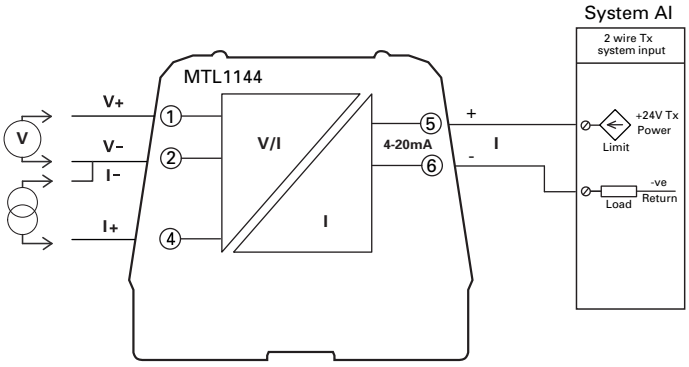

	CAUTION
	Do not connect a low impedance voltage source to terminals 2 and 4, damage may result.

Note: Signal source must be isolated from mains supply.

Table 1

MTL1144 switch settings				
DS1	**DS2**	**DS3**	**Input**	**Output**
OFF	OFF	OFF	0-1V	4-20mA
ON	OFF	OFF	0-5V	
OFF	ON	OFF	0-10V	
ON	ON	OFF	1-5V	
OFF	OFF	ON	0-20mA	
ON	OFF	ON	4-20mA	
OFF	ON	ON	0-100mV	

5.2.5 MTL1145 loop powered current repeater

The MTL1145 can be used for both input and output applications. It is primarily designed for use with analogue outputs and loop powered from the system output. Power is taken from the analogue output signal to power the isolator. HART communication passthrough is not provided by this module.

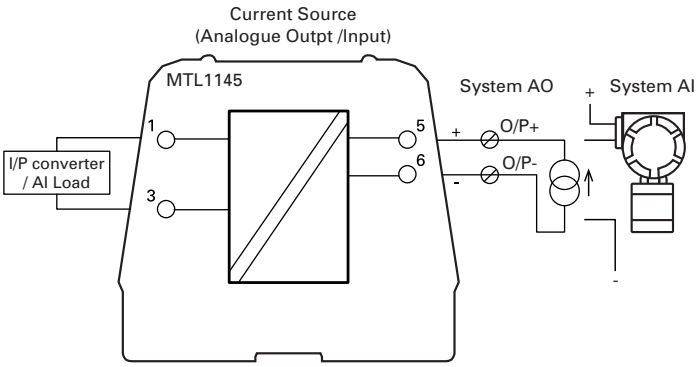

Alternatively the module can be used in a current sink mode where an analogue output in the field can be connected to pass a signal into a system input. Power is taken from the Transmitter power connection on the system and the signal is fed back through the system input load to 0V.

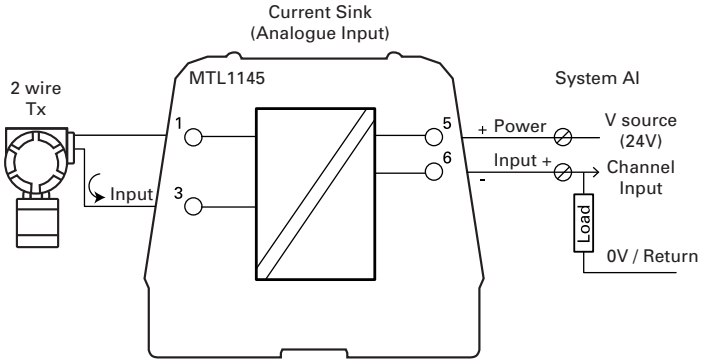

Notes: Greater accuracy is provided when operating in Current Source mode.
Signal source must be isolated from mains supply.

5.3 MTL1171, 1172 temperature and MTL1173 potentiometer converters

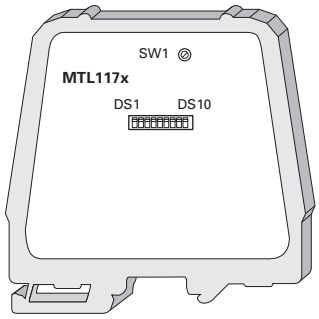

The MTL1171, for thermocouples and MTL1172, for RTD, convert low level temperature inputs to 4-20mA. The MTL1173 is for a potentiometer input. Input type and range setting is performed using switches on the side of the module for the MTL1171 and MTL1172. No input range setting is required for the MTL1173.

The sensor types and wire break detection are selected using switches DS 1-4 and a selection of popular ranges is available using switches DS 6-9.
See tables 2 and 3.

Current output, voltage output or current sink output is available on the system terminals by wiring to the appropriate terminals as shown and setting SW1 to the appropriate position.

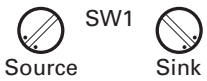

LED indicators show the power and field input status

Condition	Green (PWR)	Red (STS)
Power ON/ Normal	ON	OFF
Power Low Voltage	OFF	OFF
Field Open circuit	ON	Flashing
Module failure	ON	ON

Table 2

Configuration and DIP switch settings						
Model	**Input type**	**DS1**	**DS2**	**DS3**	**DS4**	**DS5**
		Type	**Wire Break**	**Wire Break Drive**	**Trip 1**	**Trip 2**
MTL1171	THC	J Off / K On	ON/OFF	ON = Upscale OFF = Downscale	N/A	N/A
MTL1172	RTD	4W Off 3W On				

Table 3

MTL1171 and MTL1172 range DIP switch setting					
Range THC/RTD	**DS6**	**DS7**	**DS8**	**DS9**	**DS10**
0 to 100°C	0	0	0	0	-
0 to 150°C	0	0	0	1	-
0 to 200°C	0	0	1	0	-
0 to 350°C	0	0	1	1	-
0 to 500°C	0	1	0	0	-
0 to 650°C	0	1	0	1	-
0 to 800°C	0	1	1	0	-
0 to 1000°C (RTD max 850°C)	0	1	1	1	-
-10 to 50°C	1	0	0	0	-
-50 to 50°C	1	0	0	1	-
-50 to 100°C	1	0	1	0	-
-50 to 150°C	1	0	1	1	-
-50 to 250°C	1	1	0	0	-
-50 to 350°C	1	1	0	1	-
-200 to 600°C	1	1	1	0	-
Special (Reserved)	1	1	1	1	-

Note: Cycle power supply after setting switches

5.3.1 MTL1171 thermocouple input converter

For Type J or K thermocouples. Cold junction compensation is provided by the MTL1171. Switch settings select open wire detection and up/down scale drive.

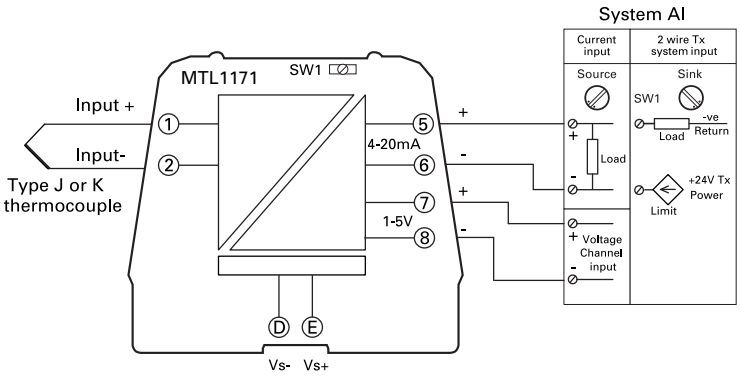

5.3.2 MTL1172 RTD input converter

For PT100 RTD sensors. Switch settings select 3 or 4 wire connection and open wire detection with up/down scale drive.

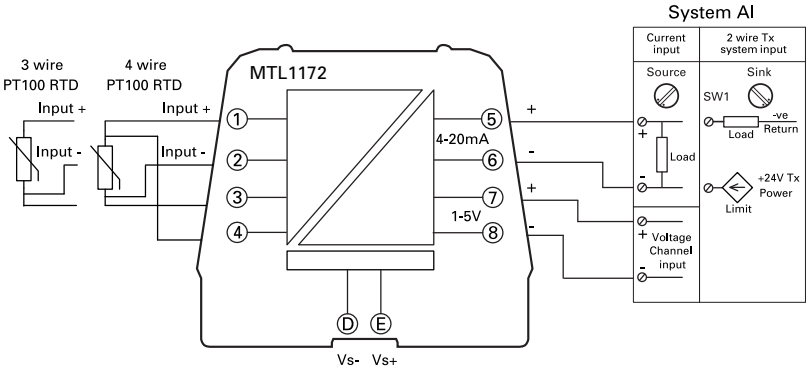

5.3.3 MTL1173 potentiometer input converter

Potentiometer Input. Current output, current sink output or voltage output is available on the system terminals by wiring to the appropriate terminals as shown and setting SW1 to the appropriate position.

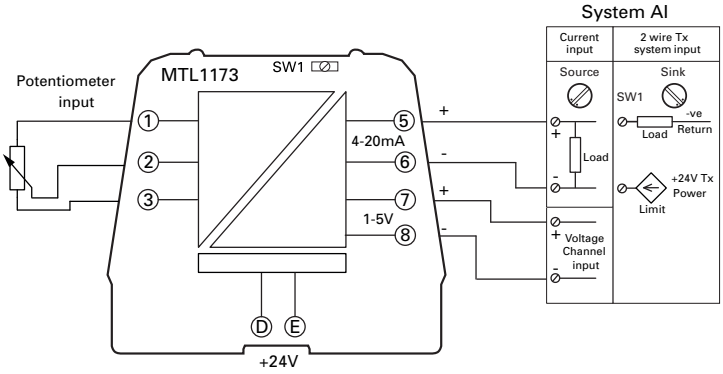

MTL1211 Switch / Proximity Detector input

Switch or proximity detector isolator with the option to select line fault detection or a repeat output Switches are used to select phase reversal and the repeat output or LFD alarm output .

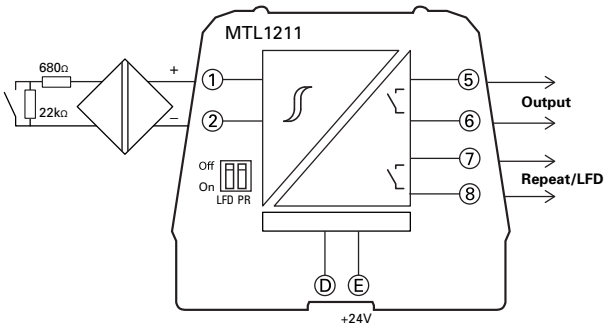

5.4 MTL1249 Current / Voltage input/output repeater

The MTL1249 is a single channel signal conditioner which can accept voltage or current inputs and provide a voltage or current output. The signal levels are selected by the user using switches on the module as shown in the table 4.

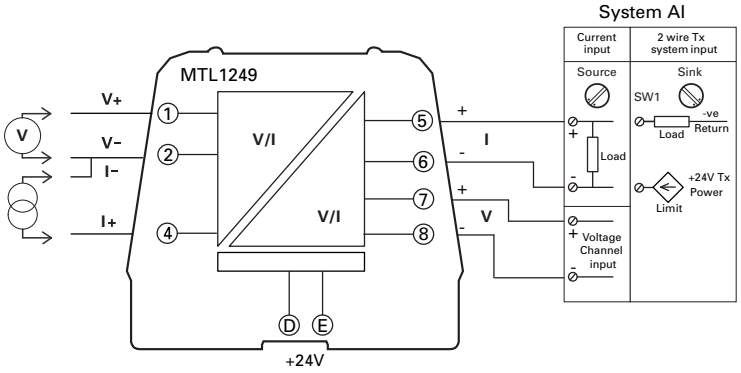

Table 4 MTL1249 Dip Switch settings

INPUT	DS1	DS2	DS3	DS4	DS5	DS6	INPUT	OUTPUT
Voltage	OFF	OFF	OFF	OFF	OFF	OFF	0-1V	4-20mA
	ON	OFF	OFF	OFF	OFF	OFF	0-5V	
	OFF	ON	OFF	OFF	OFF	OFF	0-10V	
	ON	ON	OFF	OFF	OFF	OFF	1-5V	
Current	OFF	OFF	ON	OFF	OFF	OFF	0-20mA	
	ON	OFF	ON	OFF	OFF	OFF	4-20mA	
Voltage	OFF	ON	ON	OFF	OFF	OFF	0-1V	0-20mA
	ON	ON	ON	OFF	OFF	OFF	0-5V	
	OFF	OFF	OFF	ON	OFF	OFF	0-10V	
	ON	OFF	OFF	ON	OFF	OFF	1-5V	
Current	OFF	ON	OFF	ON	OFF	OFF	0-20mA	
	ON	ON	OFF	ON	OFF	OFF	4-20mA	
Voltage	OFF	OFF	ON	ON	OFF	OFF	0-1V	0-5V
	ON	OFF	ON	ON	OFF	OFF	0-5V	
	OFF	ON	ON	ON	OFF	OFF	0-10V	
	ON	ON	ON	ON	OFF	OFF	1-5V	
Current	OFF	OFF	OFF	OFF	ON	OFF	0-20mA	
	ON	OFF	OFF	OFF	ON	OFF	4-20mA	
Voltage	OFF	ON	OFF	OFF	ON	OFF	0-1V	1-5V
	ON	ON	OFF	OFF	ON	OFF	0-5V	
	OFF	OFF	ON	OFF	ON	OFF	0-10V	
	ON	OFF	ON	OFF	ON	OFF	1-5V	
Current	OFF	ON	ON	OFF	ON	OFF	0-20mA	
	ON	ON	ON	OFF	ON	OFF	4-20mA	
Voltage	OFF	OFF	OFF	ON	ON	OFF	0-1V	0-10V
	ON	OFF	OFF	ON	ON	OFF	0-5V	
	OFF	ON	OFF	ON	ON	OFF	0-10V	
	ON	ON	OFF	ON	ON	OFF	1-5V	
Current	OFF	OFF	ON	ON	ON	OFF	0-20mA	
	ON	OFF	ON	ON	ON	OFF	4-20mA	
Voltage	OFF	ON	ON	ON	ON	OFF	0-1V	2-10V
	ON	ON	ON	ON	ON	OFF	0-5V	
	OFF	OFF	OFF	OFF	OFF	ON	0-10V	
	ON	OFF	OFF	OFF	OFF	ON	1-5V	
Current	OFF	ON	OFF	OFF	OFF	ON	0-20mA	
	ON	ON	OFF	OFF	OFF	ON	4-20mA	
Voltage	OFF	OFF	ON	OFF	OFF	ON	0-100mV	4-20mA
	ON	OFF	ON	OFF	OFF	ON	0-100mV	0-20mA
	OFF	ON	ON	OFF	OFF	ON	0-100mV	0-5V
	ON	ON	ON	OFF	OFF	ON	0-100mV	1-5V
	OFF	OFF	OFF	ON	OFF	ON	0-100mV	0-10V
	ON	OFF	OFF	ON	OFF	ON	0-100mV	2-10 V

5.5 MTL1271 loop powered thermocouple input converter

For use with Type J or K thermocouples. Range and thermocouple type are set by use of DIP switches on the module. The maximum load resistance is dependent on the available power supply voltage. Max load = 50(Vs-17)Ω

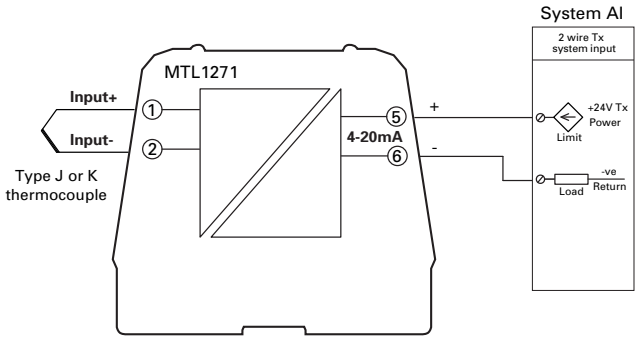

For range settings please refer to Table 5 and 6. Note, no LED indicators are fitted on the loop powered modules.

Note: Signal source must be isolated from mains supply.

5.6 MTL1272 loop powered RTD temperature converter

For use with PT100 type sensors. Range is set by use of DP switches on the module. The maximum load resistance is dependent on the available power supply voltage.Max load = 50(Vs-17)Ω

For range settings please refer to Table 5 and 6. Note, no LED indicators are fitted on the loop powered modules.

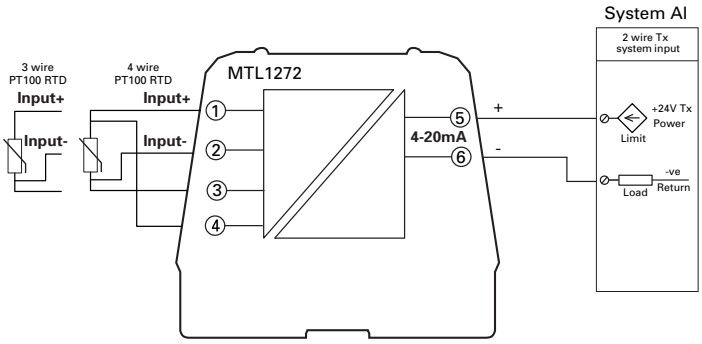

Note: Signal source must be isolated from mains supply.

Table 5

Configuration and DIP switch settings				
Model	**Input type**	**DS1**	**DS2**	**DS3**
		Type	**Wire Break**	**Wire Break Drive**
MTL1271	THC	J Off / K On	ON/OFF	ON = Upscale
MTL1272	RTD	4W Off 3W On		OFF = Downscale

Table 6

MTL1271 and MTL1272 range DIP switch setting							
Range THC/RTD	**DS4**	**DS5**	**DS6**	**DS7**	**DS8**	**DS9**	**DS10**
0 to 100°C	0	0	0	0	-	-	-
0 to 150°C	0	0	0	1			
0 to 200°C	0	0	1	0			
0 to 350°C	0	0	1	1			
0 to 500°C	0	1	0	0			
0 to 650°C	0	1	0	1			
0 to 800°C	0	1	1	0			
0 to 1000°C (RTD max 850°C)	0	1	1	1			
-10 to 50°C	1	0	0	0			
-50 to 50°C	1	0	0	1			
-50 to 100°C	1	0	1	0			
-50 to 150°C	1	0	1	1			
-50 to 250°C	1	1	0	0			
-50 to 350°C	1	1	0	1			
-200 to 600°C	1	1	1	0			
Special (Reserved)	1	1	1	1	-	-	-

6 MTL13XX TRIP AMPLIFIERS

6.1 Introduction

The trip amplifier modules all use the 17.5mm wide housing with up to 16 terminals available for field and system connections. Power can be supplied via the DIN rail power bus, using the PBUS17.5 power connectors, or directly into the module via screw terminals 15 and 16. Where the power bus is being used it is recommended power is fed directly to the bus using the PBUS02 or MTL1991 power feed connections. Two trip points may be set with high or low level switching

6.2 Trip level Setting

Setting the trip level the relay switching action must be set to High Trip or Low Trip using the switches on the side of the module. It is normal to set the relay so that under non-alarm conditions the relay contacts are Before closed. When in alarm, the relay contacts would normally be set to open, this will also be the state when the module is unpowered (failsafe operation).

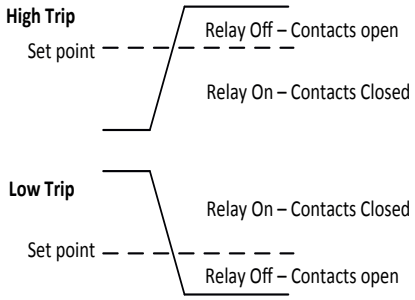

DS4 / DS5 Off – High trip, On – Low trip

Set these switches with the module off the DIN rail.

The yellow Trip LEDs are illuminated when the relays are energised.

The switching point for either trip is set by feeding the required process trip level into the input of the module and pressing one of the two small 'SET' buttons on the top of the module for the appropriate trip. The Power and STS light will flash 5 times. The level is digitally stored in the module and retained in the event of power loss. Pressing the SET button again will overwrite the previous setting to the current input level that is being applied at the time.

All models also provide a 4-20mA output which can be set for current source (active) or current sink (passive) operation as required

6.3 Label Indicators / Switches

STS	RED Off normal operation. On fault. Flashing- temperature input open circuit
PWR	GREEN on when power applied
Trip 1	YELLOW on when relay 1 energised
Trip 2	YELLOW on when relay 2 energised
DSx	DIP switches for mode setting
SW1	Current output Sink / Source setting

6.4 Switch settings

Table 1 **Trip switch settings**

MTL13xx		
DS4 (trip 1)	**DS5 (trip 2)**	**Status**
ON	ON	Trip alarm low
OFF	OFF	Trip Alarm high

Table 2

MTL137x Configuration and DIP switch settings

Model	Input type	DS1	DS2	DS3	DS4	DS5
		Type	Wire Break	Wire Break Drive	Trip 1	Trip 2
MTL1371	THC	J Off / K On	ON/OFF	ON = Upscale OFF = Downscale	Off High On Low	Off High On Low
MTL1372	RTD	4W Off 3W On				
MTL1373	POT	-				

Table 3

MTL1371 and MTL1372 range DIP switch setting

Range THC/RTD	DS6	DS7	DS8	DS9	DS10
0 to 100°C	0	0	0	0	-
0 to 150°C	0	0	0	1	-
0 to 200°C	0	0	1	0	-
0 to 350°C	0	0	1	1	-
0 to 500°C	0	1	0	0	-
0 to 650°C	0	1	0	1	-
0 to 800°C	0	1	1	0	-
0 to 1000°C (RTD max 850°C)	0	1	1	1	-
-10 to 50°C	1	0	0	0	-
-50 to 50°C	1	0	0	1	-
-50 to 100°C	1	0	1	0	-
-50 to 150°C	1	0	1	1	-
-50 to 250°C	1	1	0	0	-
-50 to 350°C	1	1	0	1	-
-200 to 600°C	1	1	1	0	-
Special (Reserved)	1	1	1	1	-

Note: Cycle power supply after setting switches

6.5 MTL1321 trip amplifier with voltage/current input and 4-20mA output

For use with 0-10V voltage or active 0-20mA current source inputs.
SW1 used to set current source or current sink 4-20mA output.

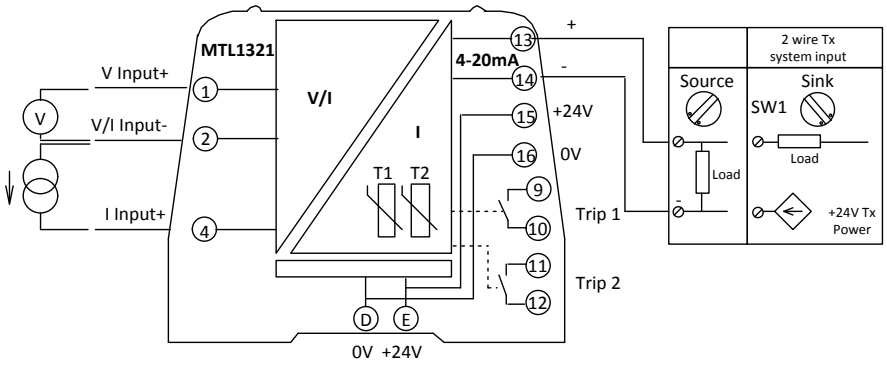

Table 4

MTL1321 SW101 range switch settings					
Input	**Output**	**DS1**	**DS2**	**DS3**	**DS6**
0-1V	4-20mA	OFF	OFF	OFF	OFF
0-5V		ON	OFF	OFF	OFF
0-10V		OFF	ON	OFF	OFF
1-5V		ON	ON	OFF	OFF
0-20mA		OFF	OFF	ON	OFF
4-20mA		ON	OFF	ON	OFF
0-1V	0-20mA	OFF	ON	ON	OFF
0-5V		ON	ON	ON	OFF
0-10V		OFF	OFF	OFF	ON
1-5V		ON	OFF	OFF	ON
0-20mA		OFF	ON	OFF	ON
4-20mA		ON	ON	OFF	ON
0-100mV	4-20mA	OFF	OFF	ON	ON
0-100mV	0-20mA	ON	OFF	ON	ON

Switches DS4 and DS5 set the trip action as previously described

6.6 MTL1341 trip amplifier with 4-20mA input/output

For use with 2 wire 4-20mA transmitter and 4 wire transmitters or 0-20mA current sources. 0-20mA isolated current repeat with 2 trip points. SW1 used to set current source or current sink 4-20mA output.

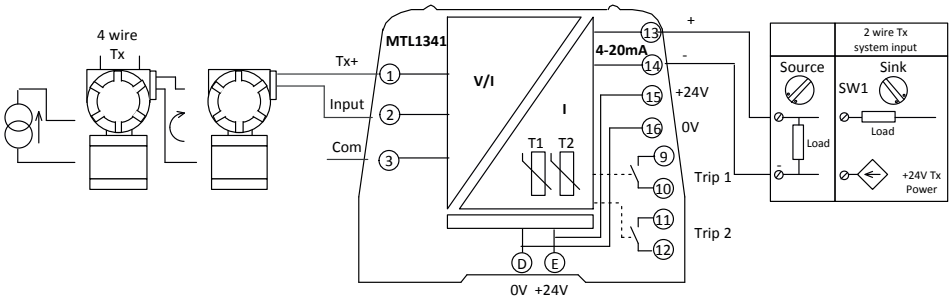

For testing a resistance may be fitted between terminals 1 and 2 to simulate an input. Use a resistance decade box or a current simulator if precise setting is required.

Resistance	Approx. Output current
25KΩ	1mA
6KΩ	4mA
1k9KΩ	12mA
1KΩ	20mA

6.7 MTL1371 trip amplifier converter, thermocouple input/4-20mA output

For use with Type J or K thermocouples. Range set using DIP switches on the side of the module. 4-20mA current output with sink or source setting and two trip points. SW1 used to set current source or current sink 4-20mA output

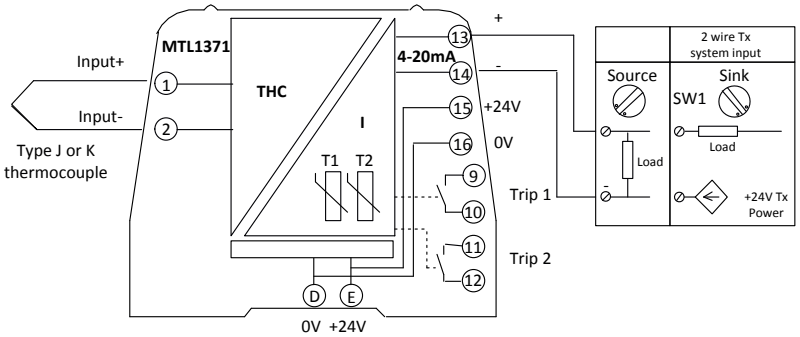

6.8 MTL1372 trip amplifier converter, RTD input/4-20mA output

For use with PT100 RTDs. Range set using DIP switches on the side of the module. 4-20mA current output with sink or source setting and two trip points. SW1 used to set current source or current sink 4-20mA output.

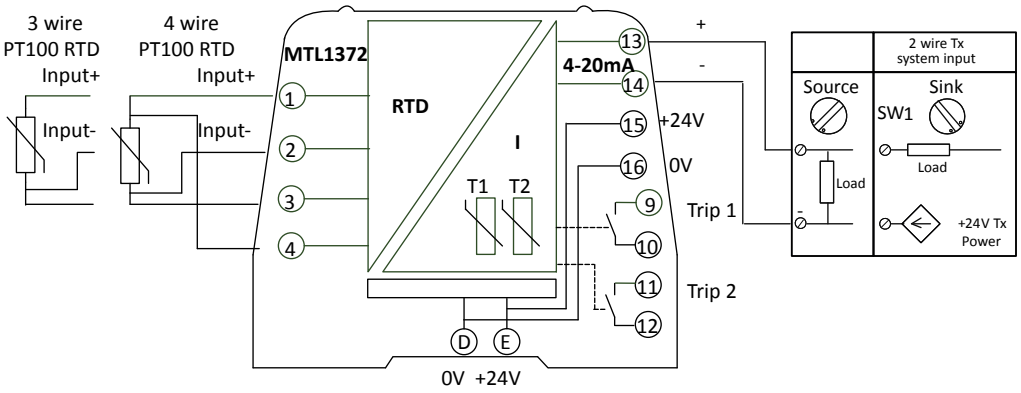

6.9 MTL1373 trip amplifier converter, Potentiometer input/4-20mA output

For use with 3 wire potentiometers with an end to end resistance between 100Ω and 100KΩ.
To minimise the effect of wiring resistance between the module and the potentiometer a higher value potentiometer resistance is recommended. SW1 used to set current source or current sink 4-20mA output.

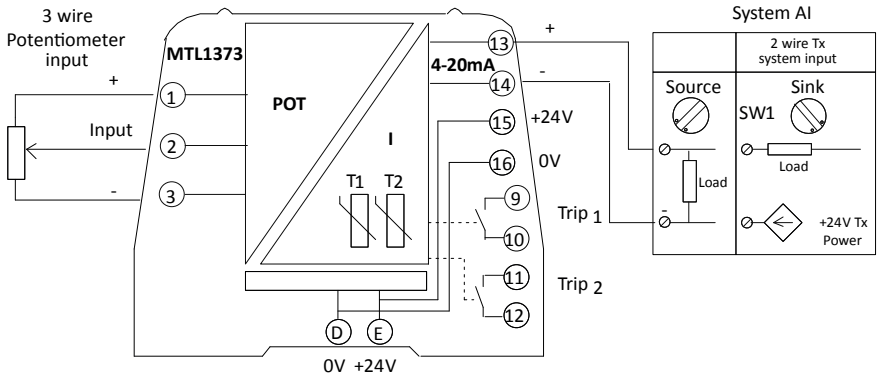

7 MAINTENANCE

Note: Return any isolator identified as faulty to the Eaton's MTL product line or representative from which it was purchased, for repair or replacement.

7.1 Routine maintenance

Occasionally check the general condition of the installation to make sure that no deterioration has occurred. At least once every two years (and more frequently for particularly harsh environments), check that:

- isolators are of the types specified in the relevant documentation.
- isolators are legibly tagged and tag details given comply with the relevant documentation.
- isolators are securely clipped to the DIN rail.
- all cable connections are properly made to the isolators.
- all connecting cables are of the specified type and rating, are correctly routed (particularly when fitted in enclosures), and are not frayed or otherwise damaged.
- all cable screens are properly earthed.
- there is no sign of damage or corrosion.
- to clean use water based damp cloth.

7.2 Enclosures

The only enclosure maintenance required is cleaning and periodic visual inspections. Clean external surfaces only, using soap and water, do not use chemical solvents or proprietary cleaning fluids. Every year (more frequently in harsh environments), inspect enclosures and check that:

- they are attached securely to their mountings.
- any accumulation of water inside has been removed (using the drain plug, if fitted).
- cable gland nuts are tight.
- there are no signs of any damage.
- all connections are properly made.

8 APPENDIX A

Table 1 Isolator current consumption for MTL1991 calculation @ 24V.

Isolator	Typical load current	Maximum load current
MTL1141	33mA @16mA output	45mA
MTL1142	35mA @16mA output	51mA
MTL1143	50mA @16mA output	71mA
MTL1171	15mA voltage out 35mA current out	40mA
MTL1172	15mA voltage out 35mA current out	40mA
MTL1173	15mA voltage out 35mA current out	40mA
MTL1211	25mA	35mA
MTL1249	38mA	38mA
MTL13xx	55mA	80mA

THIS PAGE IS LEFT INTENTIONALLY BLANK

THIS PAGE IS LEFT INTENTIONALLY BLANK

CROUSE-HINDS
SERIES

EATON Crouse-Hinds series

The safety you rely on.

See the complete MTL product portfolio at **www.eaton.com**

For more information:
If further assistance is required, please contact an authorised MTL Distributor, Sales Office, or Customer Service Department

https://www.mtl-inst.com/contact

Eaton Electric Ltd
Great Marlings, Butterfield, Luton
Beds LU2 8DL

Tel: +44 (0) 1582 723633 Fax: +44 (0)1582 422283
E-mail: mtlenquiry@eaton.com
www.eaton.com

Powering Business Worldwide

Eaton Electric Limited,
Great Marlings, Butterfield, Luton
Beds, LU2 8DL, UK.
Tel: + 44 (0)1582 723633 Fax: + 44 (0)1582 422283
E-mail: mtlenquiry@eaton.com
www.mtl-inst.com

© 2025 Eaton
All Rights Reserved
Publication No. INM 1000 Rev 10 170225
February 2025

EUROPE (EMEA):
+44 (0)1582 723633
mtlenquiry@eaton.com

THE AMERICAS:
+1 800 835 7075
mtl-us-info@eaton.com

ASIA-PACIFIC:
+65 6645 9888
sales.mtlsing@eaton.com

The given data is only intended as a product description and should not be regarded as a legal warranty of properties or guarantee. In the interest of further technical developments, we reserve the right to make design changes.