Instruction manual
MTL fieldbus networks

February 2017
INM F810A Rev 2

CROUSE-HINDS
SERIES

F810A

Redundant fieldbus power system for Foxboro EVO™ control systems

Powering Business Worldwide

THIS PAGE IS LEFT INTENTIONALLY BLANK

CONTENTS

1 OVERVIEW . . . 1

2 COMPONENTS AND ACCESSORIES . . . 1

3 DESCRIPTION . . . 2

4 MECHANICAL INSTALLATION . . . 3

4.1 General . . . 3

4.2 Mounting orientation . . . 4

4.2.1 Outdoor mounting . . . 4

4.3 Baseplate mounting . . . 4

4.3.1 Mounting procedure . . . 4

4.3.2 Removal from DIN rail . . . 4

4.4 Mounting and removal of the Power Modules . . . 5

4.4.1 F809F- Plus diagnostic module . . . 5

5 ELECTRICAL INSTALLATION . . . 5

5.1 Introduction . . . 5

5.1.1 FBM228 input power . . . 5

5.1.2 Supplying the Power Modules . . . 5

5.1.3 Redundancy . . . 6

5.2 Input power connections . . . 6

5.2.1 Power from Foxboro system only - Option 1 . . . 6

5.2.2 Power from other bulk supplies - Option 2 . . . 6

5.2.3 Over-current protection . . . 7

5.3 Alarm circuit . . . 7

5.3.1 Alarm terminals . . . 7

5.3.2 Simplex operation . . . 7

5.4 Module Fieldbus connections . . . 8

5.5 Fieldbus segment connections . . . 8

5.5.1 Terminator . . . 9

5.6 Grounding . . . 9

5.6.1 Fieldbus ground . . . 9

5.6.2 Chassis ground . . . 9

5.7 Diagnostics module . . . 9

5.7.1 Diagnostics module power supply . . . 10

5.7.2 Diagnostics module segment termination . . . 10

5.8 Address switch settings . . . 10

6 TESTING & TROUBLESHOOTING . . . 11

6.1 F80x Status and Alarm LEDs . . . 11

6.2 Testing after installation . . . 11

6.3 Troubleshooting . . . 11

F810A - redundant fieldbus power system for Foxboro EVO™ control systems

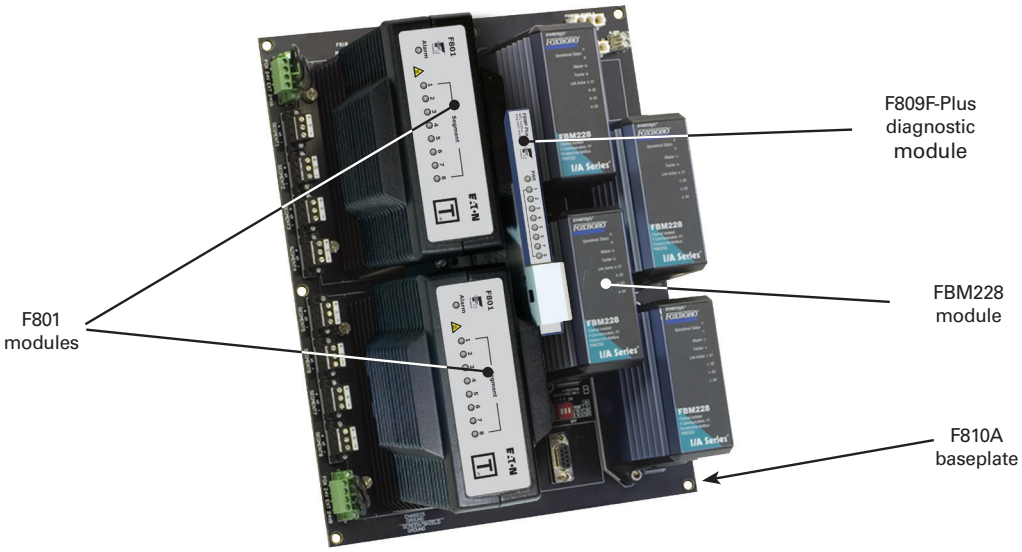

Figure 1.1- F810A assembly

1 OVERVIEW

This manual explains the installation of the F810A fieldbus power system, which is designed to provide redundant FOUNDATION fieldbus™ power for Foxboro EVO™ control systems using FBM228 modules. Eight fieldbus segments are supported.

For extreme reliability, the module baseplate has no components and only provides interconnections between FBM228 modules; the F801 or F802 power modules; the F809F- ***Plus*** diagnostics module and the external connections.

In general purpose, safe area applications, the system is fully 'hot-swappable'- meaning that individual power modules and input power supplies can be replaced without interrupting power or communication on the fieldbus segment, assuming that redundant F80x power modules are fitted.

The system is designed so that power for several fieldbus segments can be provided from a single assembly with minimal wiring.

2 COMPONENTS AND ACCESSORIES

The F810A system comprises the following components.

Description	Part No.
Carrier, unpopulated	F810A-CA
8-segment power module: 21.5V, 350mA 8-segment power module: 28V, 500mA	F801 F802
F810A system with pluggable screw terminal connectors and two F801 modules	F810A-PS
F810A system with pluggable screw terminal connectors and two F802 modules	F810A-2-PS
F810A system with pluggable spring clamp connectors and two F801 modules	F810A-PC
F810A system with pluggable spring clamp connectors and two F802 modules	F810A-2-PC
Blanking module	F800-BLK
Fieldbus diagnostic module	F809F-Plus

NOTE

The system does not include the Foxboro FBM228 FOUNDATION fieldbus™ interfaces, and that the F809F-Plus Fieldbus Diagnostic Module is an optional additional item.

3 DESCRIPTION

The system comprises a baseplate which accommodates two redundant pairs of Foxboro FBM228 modules and two MTL-Relcom F801 or F802 power modules operating in redundant configuration. Failure alarms, galvanic isolation, power conditioning and segment termination are incorporated into each power module.

Each F80x module has indicator LEDs to show both its status and that of the eight segments under power. In normal operation, each green 'Segment' LED is lit, showing that the segment is powered. If a segment is shorted, or its voltage is below the rated output, this LED is extinguished, and the red 'Alarm' LED is lit. In the alarm condition, a normally closed, galvanically-isolated relay contact goes to an open condition. Connections to the alarm relay are made via screw terminals on the F810A baseplate. If multiple F810A units are used, a common alarm circuit can be achieved by 'daisy-chaining' the alarm circuits.

Any F80x module provides galvanic isolation between the 24V DC input power and the fieldbus segments, as required by the IEC61158-2 fieldbus standard and the Fieldbus FOUNDATION™
FF-831 validation test for power conditioners. There is also galvanic isolation between the fieldbus segments, thereby preventing multiple segment failures from ground faults on more than one segment. Each segment has its own fieldbus power conditioner and current limitation. Termination of the fieldbus segment is automatically maintained when single or redundant F80x modules are fitted.

An F809F- *Plus* diagnostic module may optionally be installed on the carrier, to automatically collect and distribute diagnostic information on each of the eight fieldbus segments. Measured parameters may be viewed in the Foxboro control system by either assigning the F809F- *Plus* as a fieldbus device to segment one or eight, or on a separate segment. Connections for a separate segment are provided on the baseplate. For more information, see the F809F- *Plus* product specification.

Redundant 24V DC (nom.) input power can be connected to the F810A baseplate using Foxboro EVO™ standard 3-way power connectors. In situations where Foxboro power supplies cannot provide sufficient current, the F80x modules can also be powered separately via additional board-mounted terminals.

Field wiring connections are available with either pluggable screw terminals (F810A-PS) or pluggable spring clamp terminals (F810A-PC).

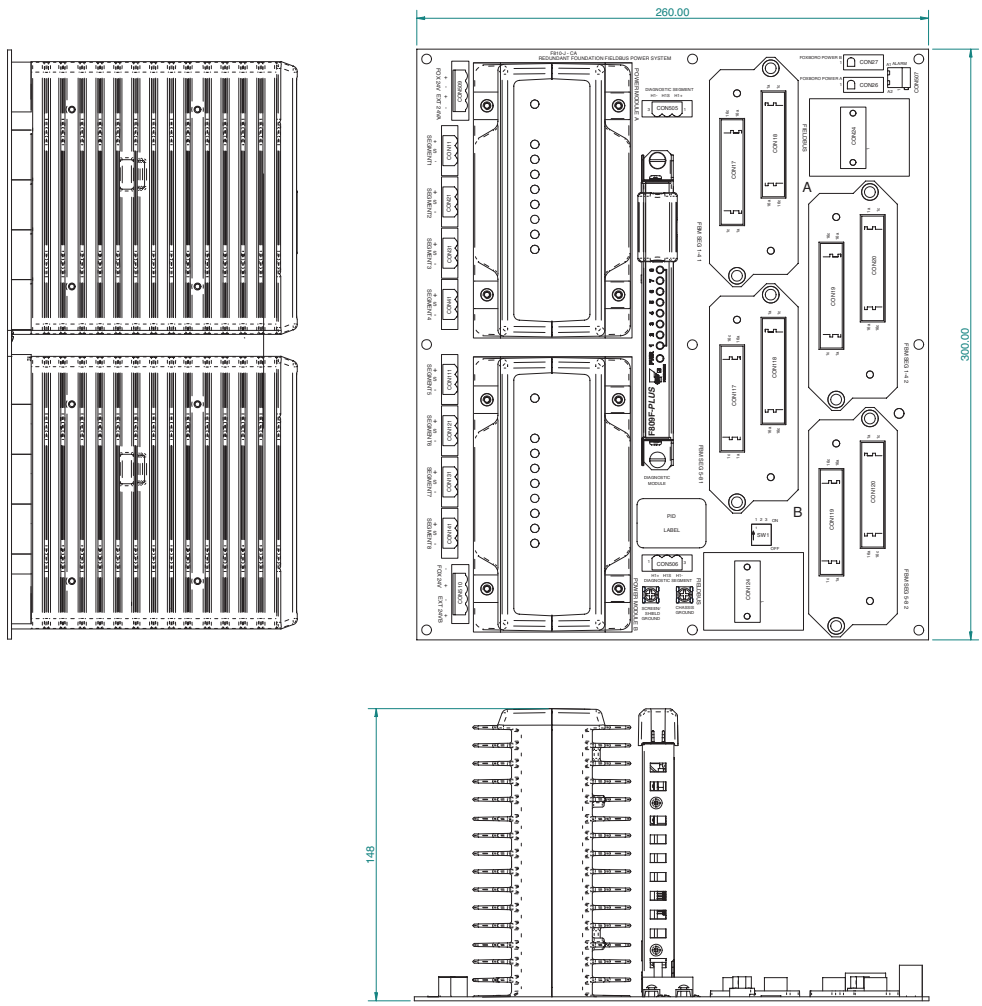

Figure 4.1- F810A baseplate showing modules and dimensions

4 MECHANICAL INSTALLATION

The layout of the F810A baseplate, including details of the overall dimensions and DIN-rail fixings, is shown in Figure 4.1.

4.1 General

These power systems may be mounted only in safe areas and wherever they are located, the mounting conditions must:

a) prevent any form of pollution that could compromise the operation of the unit. For example, an unpolluted location or a suitable enclosure could be chosen.

b) provide an adequate level of mechanical protection. This can be achieved by selecting a protected location, a suitable cabinet or enclosure, or a combination of both.

c) ensure that all cable entries and connections are secure by making provision for the careful routing and securing of all cables.

d) provide adequate security against unauthorised interference.

e) ensure that the permitted ambient operating temperature range of the units (–40°C to + 65°C) is not exceeded. If F802 Power Modules are to be used at 60% or more of their full-load rating then they must be de-rated to 50°C. Power dissipation within the cabinet or enclosure and the effect of heating from sunlight exposure should be considered.

4.2 Mounting orientation

It is recommended that the F810A baseplate is mounted on a vertical surface with the orientation of the F80x modules as shown in Figure 4.1 above. Any other orientation will not provide optimum airflow for the F80x power modules. The baseplate is designed for mounting onto vertical DIN rails. Holes are provided in the baseplate for attaching DIN-rail clips that are supplied separately as part of the F810A assembly.

4.2.1 Outdoor mounting

If the assembly is to be mounted in an outdoor location, use a suitable enclosure with a minimum of IP54 ingress protection. A higher degree of ingress protection is recommended if the atmosphere can become corrosive, wet or dusty.

4.3 Baseplate mounting

The carrier is designed for mounting on 35mm x 7.5mm T-section "top hat" DIN rail to EN 50022

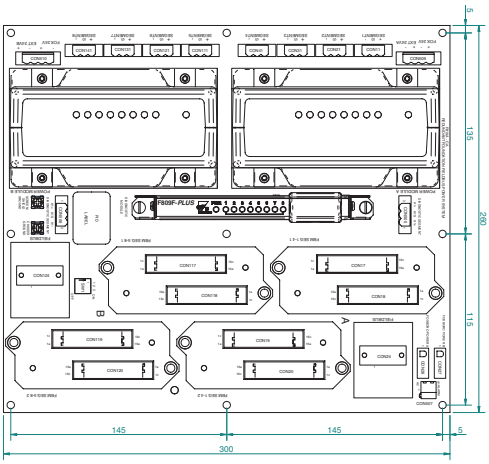

4.3.1 Mounting procedure

Install 3 vertical DIN rails whose centre lines correspond to the pitch of the 9 mounting holes in the F810A baseplate. The centres of the fixing holes are indicated in the dimensioned drawing in Figure 4.2. Clip the nine DIN-rail clamps that are supplied as part of the F810A-CA kit onto the rails, and position them to correspond approximately with the six mounting holes in the baseplate. Rotate the clips so that their axis is horizontal; the left-right orientation is not important, except for visual consistency.

Adjust the clip positions so that their centre fixing holes are exactly in line with the baseplate mounting holes. (This will be trivial because the centre holes correspond directly with the DIN-rail centre-line). Remove the fixing screws from the clips and feed them through the six holes in the baseplate. Position the separating bushes underneath the baseplate and are hold them in place using the nylon washers.

Offer the carrier up to the clips and secure the screws. Note that with this arrangement, the six of the clips on the outer fixing centres will protrude to the left or right of the baseplate.

4.3.2 Removal from DIN rail

The baseplate is removed from the DIN rails by removing the 9 fixing screws from the DIN-rail mounting clips.

4.4 Mounting and removal of the Power Modules

Each power module has four captive screws to secure it to the carrier. Align the module over its electrical connectors on the carrier, press it to the carrier and hold it in place while tightening the four fixing screws.

To remove a power module, support the module while unscrewing the four fixing screws at its base then lift the module off its carrier connector.

4.4.1 F809F - *Plus* diagnostic module

The F809F-Plus diagnostic module is secured to the baseplate with two screw mountings. Use a similar technique to that given above to fit and remove this module.

5 ELECTRICAL INSTALLATION

5.1 Introduction

There are two separate methods of powering the F80x power modules on the baseplate- directly from the Foxboro Power system or through the use of External Power supplies. Both methods are capable of providing redundant power to the F810A.

Refer to Figure 5.1 for additional information regarding the two methods.

5.1.1 FBM228 input power

Power for the FBM228 modules is provided solely from the Foxboro A & B power connectors located at the top right-hand corner of the baseplate (see Figures 5.1 and 5.2).

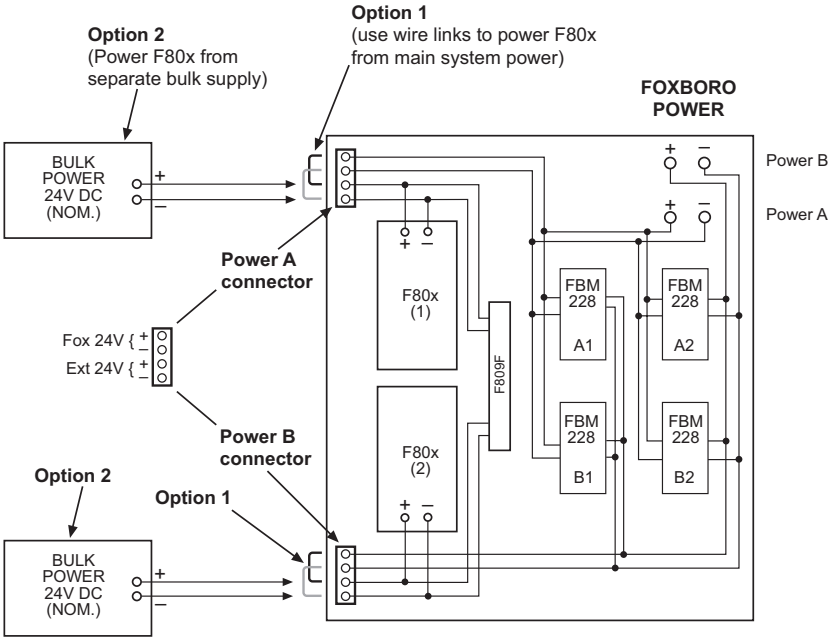

Figure 5.1- Input power options

5.1.2 Supplying the Power Modules

The input power for the F80x power modules can be supplied in one of two ways, as required.

Option 1 from the regular A & B Foxboro power supplies

Option 2 from one or two external bulk supplies.

See Figure 5.1 for additional details.

continued on the next page

The choice normally depends upon the amount of supply current available from the Foxboro Power system.

With F801 modules installed, and all segments providing 350mA, the total current required for the baseplate is 4.4A. With F802 modules installed, and all segments providing 500mA the total current required for the baseplate is 6.9A.

NOTE

The F809F-Plus diagnostic module, if fitted, always receives its power in the same way as the F80x modules.

5.1.3 Redundancy

For redundant operation, F80x modules are fitted in Power Module A and Power Module B locations.

For non-redundant operation fit the F80x in the Power Module A location.

5.2 Input power connections

CAUTION

All incoming power supplies Foxboro Power (A & B) and/or External Bulk supplies must be isolated before removing or fitting either of the wire links used to configure Option 1 or 2.

5.2.1 Power from Foxboro system only - Option 1

To power the fieldbus Power Modules exclusively from the Foxboro Power system use the connectors located at the top right of the baseplate, as shown in Figure 5.2. These accept standard Foxboro (P0926Kx) style power cables that supply redundant inputs of nominally 24V dc.

When using Option 1 the power connectors locate at the top and bottom left of the baseplate must have wire links in place as illustrated in Figure 5.1. These wire links loop the Foxboro system power into the F80x modules. All power will then be taken from the main Foxboro system supply. Wire links are provided with the baseplate.

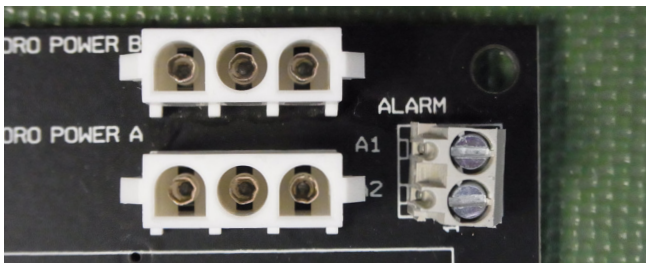

Figure 5.2- System Power and Alarm connections

5.2.2 Power from other bulk supplies - Option 2

The F80x modules can also be powered separately from external bulk power supplies via additional board-mounted terminals. The upper terminal block supplies Power Module A and the lower terminal block supplies Power Module B- see Figure 5.1.

In order to connect an external bulk supply to one of the terminal blocks, the two wire links must be removed. See Caution above.

Remove any wire links from the upper and lower connector blocks (see Figure 5.1) and connect separate external 19.2- 30.0V DC supplies to the EXT 24V '+' and '–' terminals- observing the correct polarities.

The cable length to these bulk supply inputs shall be limited to a maximum of 30 metres.

5.2.3 Over-current protection

A fully populated F810A baseplate (including both F80x power modules, F809F-Plus Fieldbus diagnostic module and FBM228 Fieldbus interface modules) draws a maximum current of 4.4A at 24V DC input (x.xA typical). Suitably rated fuses or circuit breakers must be installed in the primary and secondary 24V DC power supply connections. For example, a rating of 10A is suitable for protection of a single F810A baseplate. This rating is required in the primary and secondary sources of supply, to ensure continued operation in the event of a failure of one supply. If a single method of over-current protection is provided for multiple baseplates, the power supply wiring must be capable of sustaining the short-circuit current.

5.3 Alarm circuit

Each F80x power module contains an alarm relay and the contacts of the relay are normally held closed while the module is in its normal "no alarm" condition.

A shorted segment, the "failure" of any of the incoming bulk power supply, or an F80x module failure, will cause the relay contacts in the F80x module to open, signalling an alarm condition.

5.3.1 Alarm terminals

Two screw terminals A1 & A2 are provided on the baseplate (see Figure 5.2) to make connection to the alarm relay's switch contacts. These terminals are the ends of a series connection of the alarm circuits of both power modules (see Figure 5.3). The alarm contacts may be daisy-chained with the alarm contacts on other F810A baseplates.

5.3.2 Simplex operation

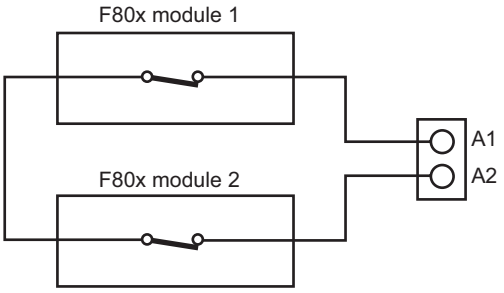

Figure 5.3- Alarm contacts (normal condition)

If one of the F80x modules is not fitted; for example in a non-redundant application, or for repair or replacement; a "simplex adapter" (part number F800-BLK- see Figure 5.4) can be fitted to the empty F80x connector position to provide continuity for the alarm circuit (see Section 5.3.1); this prevents an alarm being signalled when one F80x module is absent.

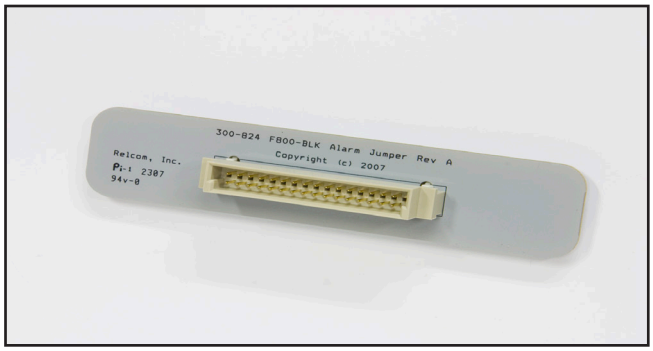

Figure 5.4- F800-BLK Simplex Adapter

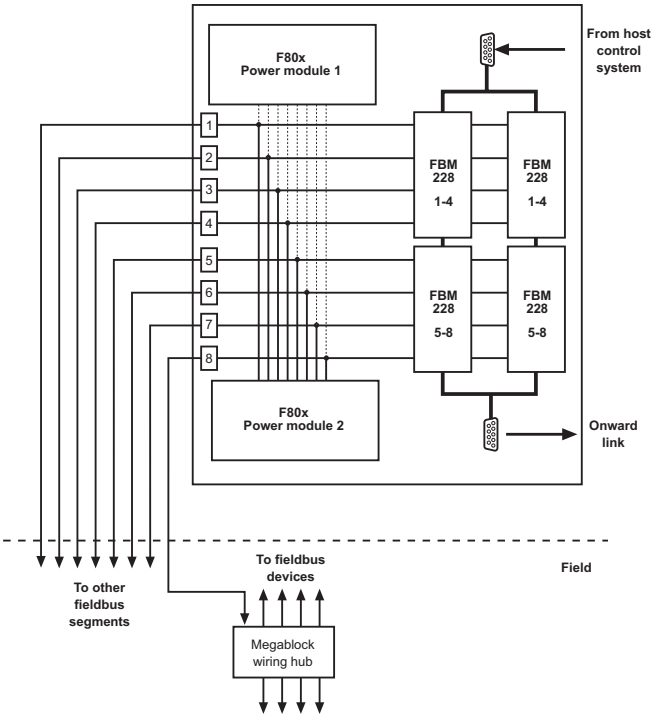

Figure 5.5- F810A fieldbus diagram

5.4 Module Fieldbus connections

9-pin D-type terminals (see Figure 5.6) are provided top and bottom on the the righthand side of the baseplate. These accept standard Foxboro Module Fieldbus cables. The two connectors provide a through path to onward link the fieldbus LAN as shown in Figure 5.5.

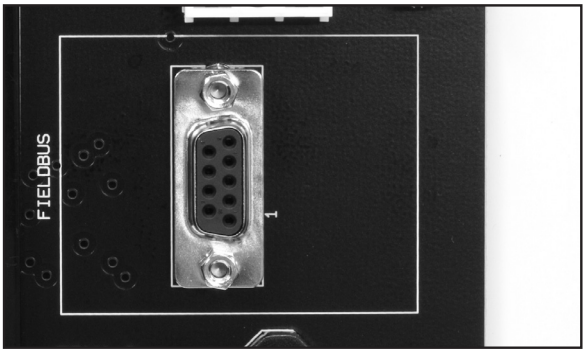

Figure 5.6- Fieldbus segment connector

5.5 Fieldbus segment connections

The eight fieldbus segments connections are located on the lefthand side of the baseplate beside the F80x power modules- as shown in Figure 5.7. The connectors are pluggable and available in a rising cage clamp screw version (-PS) or a spring clamp version (-PC). See Figure 5.8.

The terminals can accept the following conductor sizes:

Type	Conductor size
Screw terminals (-PS)	0.14 to 2.5mm^2
Spring clamp terminals (-PC)	0.2 to 2.5mm^2 flexible or rigid

Note: When wiring to spring-clamp terminals, use a screwdriver with a 3-4 mm blade and depress the spring-clamp button before inserting the termination cable. See Figure 5.8.

If the fieldbus cable screens are to be grounded at the F810A then they should be connected to the 'S' terminal on each connector. However, if they are not grounded at the F810A, the screen wire should be cut off and insulated to avoid contact with the board.

5.5.1 Terminator

A single terminator is provided automatically on each segment whether one or two F80x Power Modules are used.

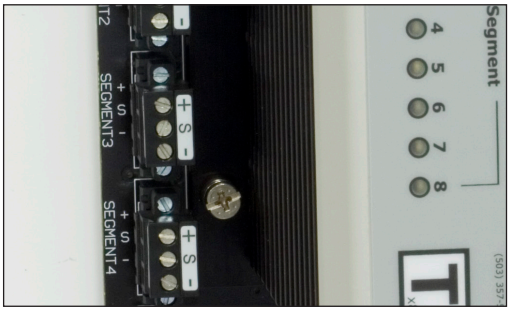

Figure 5.7- Fieldbus segment connectors-screw terminal version

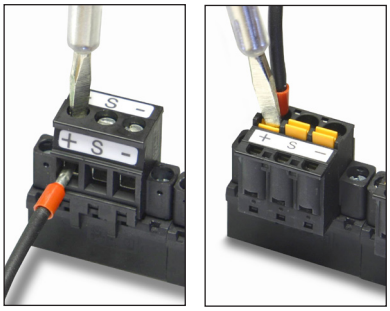

Figure 5.8- Screw terminal and spring-clamp connectors

5.6 Grounding

5.6.1 Fieldbus ground

The 'S' terminals of the trunk field connectors are connected via the baseplate to a Screen/Shield Ground terminal in the bottom left corner located towards the lower edge of the baseplate (see Figure 5.9). The Screen/Shield Ground terminal should be connected to a "clean" instrumentation ground.

Figure 5.9- Ground termianals

5.6.2 Chassis ground

A protective and EMC ground connection is available at the Chassis Ground terminal located towards the lower edge of the baseplate in the bottom left corner of the baseplate (see Figure 5.9). This is connected to the metal cases of the F80x power modules and the F809F-Plus diagnostic module and should be connected to the cabinet ground.

5.7 Diagnostics module

A Fieldbus Diagnostic Module, type F809F-Plus, can be fitted on the F810A baseplate. It may be assigned as a participant fieldbus device on segments 1 or 8 or, alternatively, it can communicate with the Foxboro EVO™ control system by means of a dedicated FOUNDATION fieldbus™ H1 segment. Refer to the separate instruction manual for the F809F-Plus (INM F809F-Plus) for further details.

Figure 5.10 shows how a dedicated diagnostic segment, comprising multiple F810A baseplates, is interlinked, powered and terminated. Where baseplates are installed in vertical columns, connect the H1+, H1– and H1S terminals of adjacent baseplates as shown. A segment may support a number of F809F-Plus modules. The actual number is based on a number of factors:

the logical device limit of the host,

- the fieldbus power supply capacity,
- operational constraints such as bandwidth and
- the overall (system) impact of the loss of that diagnostic segment

It is recommended that shielded, twisted-pair cable, complying with FOUNDATION fieldbus™ 'Type A' construction shall be used.

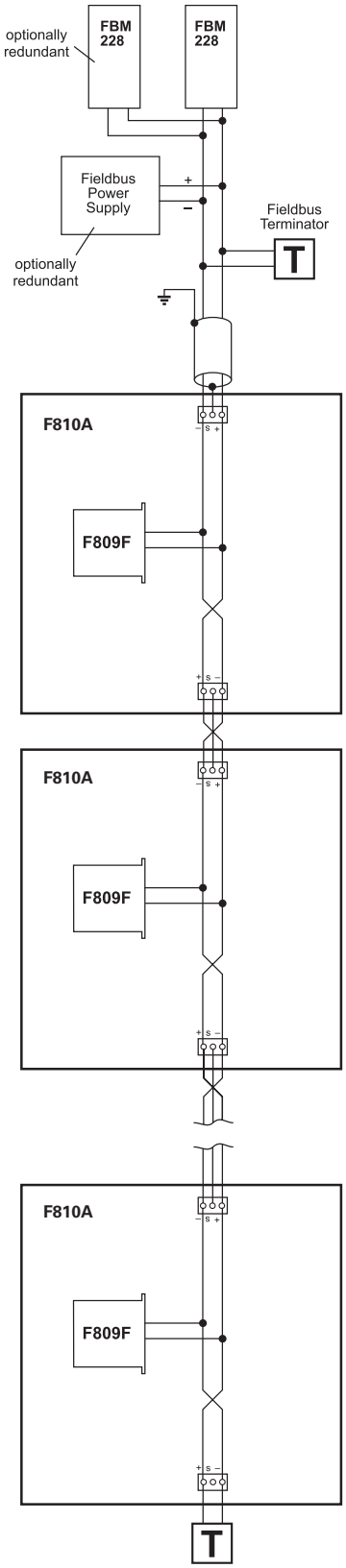

Figure 5.10- Diagnostic module fieldbus links

5.7.1 Diagnostics module power supply

The diagnostic segment must be powered by a conditioned fieldbus power supply (see Figure 5.10), such that a voltage in the range 9–32V DC is available at each F809F-Plus fieldbus diagnostic module connected on the segment.

> **Note:**
> This power is not provided automatically from the F810A baseplate and must be connected as shown in Figure 5.10

This power supply may be either simplex or redundant, depending on the application, and be capable of providing sufficient current for the entire diagnostic segment. Each F809F-Plus module draws approximately 15mA, so a segment comprising 10 modules will, for example, require an output current of at least 150mA. A suitable redundant fieldbus power supply is MTL- Relcom type FPS-I, which provides 350mA at 25.0V DC. Alternatively, type FPS-DT provides two segments of non-redundant power.

5.7.2 Diagnostics module segment termination

The diagnostic segment must be terminated at both ends to maintain the bus impedance within FOUNDATION fieldbus™ limits. A terminator must therefore be connected between the H1+ and H1- terminals of the diagnostic bus connector at the far end of the segment (see Figure 5.10). A suitable terminator for this purpose is MTL type FBT1-IS. Termination of the bus at the opposite end may be provided by an integrated terminator within the power supply (such as exists within the FPS-I and F102 types) or by means of a separate terminator.

5.8 Address switch settings

SW1	SW1	ID
ON	ON	0
ON	OFF	1
OFF	ON	2
OFF	OFF	3

	SW3
POSN.	
1- 4	ON
5- 8	OFF

Table 5.11- Address switch tables

The address of the FBM228 Fieldbus Interface Modules is set using address switches S1 to S3, according to the following tables:

6 TESTING & TROUBLESHOOTING

The F810A circuit board has no discrete components fitted so testing is confined to the operation of the modules fitted to the backplate.

6.1 F80x Status and Alarm LEDs

Each F80x power module is fitted with nine LEDs, eight to indicate segment status and one to signify an Alarm condition. Use Figure 6.1 below to help identify error conditions. Note: The LEDs on the F802 power modules will operate in the same manner.

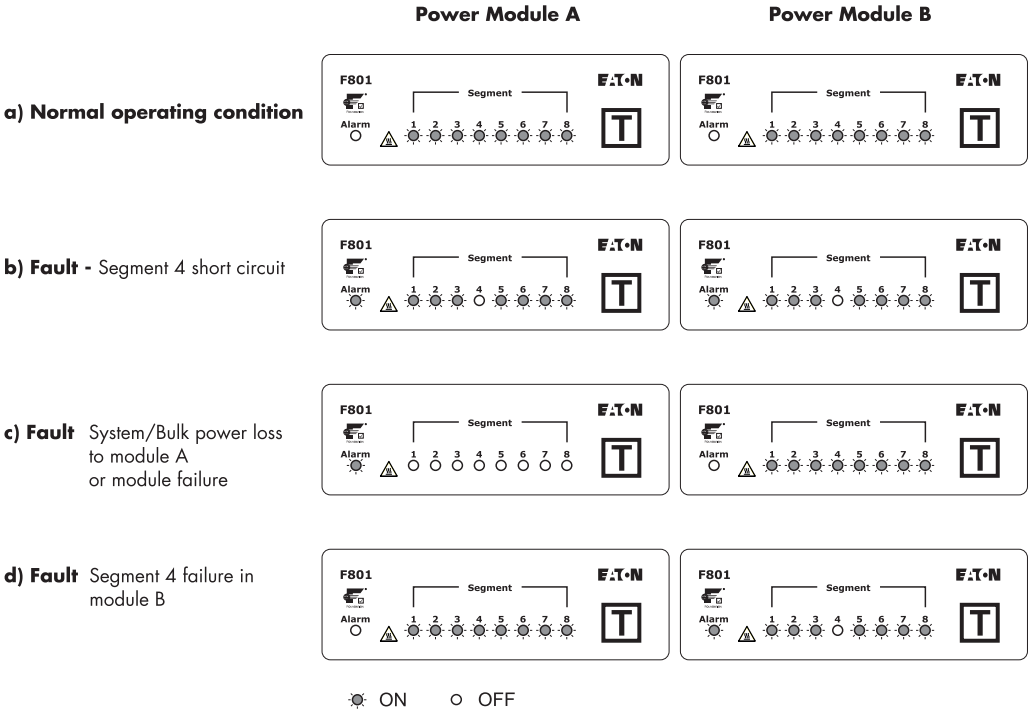

Figure 6.1- F80x LEDs troubleshooting

6.2 Testing after installation

Apply power and, by consulting Figure 6.1, ensure that the Normal condition applies to the power modules.

If redundant power supplies are being used, disconnect the incoming secondary power and check that Fault condition c) occurs. Replace the secondary power connector and remove the primary and the module LED displays should be the reverse of condition c), i.e. module A LED display will now look like module B's and B's will look like A.

If external bulk supplies are being used- as described in Section 5.2.2- it might be useful to perform a similar procedure where Power A and Power B connectors are removed in turn and the module LED displays should perform in the same manner as that just described.

6.3 Troubleshooting

The power module LED displays shown in Figure 6.1 should be consulted for help in identifying problems occuring with power supply or segment faults.

7 MAINTENANCE

7.1 Routine maintenance

Check the general condition of the installation occasionally to make sure that no deterioration has occurred. At least every two years (and more frequently for particularly harsh environments) check:

- the condition of wire connection/terminations/screens.
- the dc output voltage on each of the four fieldbus segments is >21.5V for the F801 and >28V for the F802. This can be performed using a multimeter or a Relcom FBT-6 fieldbus tester.
- that the segment LEDs on the F80x module(s) are functioning and the Alarm LED(s) is not lit.
- that the retaining screws are tight.
- that there are no signs of damage or corrosion.

THIS PAGE IS LEFT INTENTIONALLY BLANK

THIS PAGE IS LEFT INTENTIONALLY BLANK

THIS PAGE IS LEFT INTENTIONALLY BLANK

CROUSE-HINDS
SERIES

AUSTRALIA
MTL Instruments Pty Ltd,
10 Kent Road, Mascot, New South Wales, 2020, Australia

Tel: +61 1300 308 374 Fax: +61 1300 308 463
E-mail: mtlsalesanz@eaton.com

BeNeLux
MTL Instruments BV
Ambacht 6, 5301 KW Zaltbommel
The Netherlands

Tel: +31 (0) 418 570290 Fax: +31 (0) 418 541044
E-mail: mtl.benelux@eaton.com

CHINA
Cooper Electric (Shanghai) Co. Ltd
955 Shengli Road, Heqing Industrial Park
Pudong New Area, Shanghai 201201

Tel: +86 21 2899 3817 Fax: +86 21 2899 3992
E-mail: mtl-cn@eaton.com

FRANCE
MTL Instruments sarl,
7 rue des Rosiéristes, 69410 Champagne au Mont d'Or
France

Tel: +33 (0)4 37 46 16 53 Fax: +33 (0)4 37 46 17 20
E-mail: mtlfrance@eaton.com

GERMANY
MTL Instruments GmbH,
Heinrich-Hertz-Str. 12, 50170 Kerpen, Germany

Tel: +49 (0)22 73 98 12- 0 Fax: +49 (0)22 73 98 12- 2 00
E-mail: csckerpen@eaton.com

INDIA
MTL India,
No.36, Nehru Street, Off Old Mahabalipuram Road
Sholinganallur, Chennai- 600 119, India

Tel: +91 (0) 44 24501660 /24501857 Fax: +91 (0) 44 24501463
E-mail: mtlindiasales@eaton.com

ITALY
MTL Italia srl,
Via San Bovio, 3, 20090 Segrate, Milano, Italy

Tel: +39 02 959501 Fax: +39 02 95950759
E-mail: chmninfo@eaton.com

JAPAN
Cooper Crouse-Hinds Japan KK,
MT Building 3F, 2-7-5 Shiba Daimon, Minato-ku,
Tokyo, Japan 105-0012

Tel: +81 (0)3 6430 3128 Fax: +81 (0)3 6430 3129
E-mail: mtl-jp@eaton.com

NORWAY
Norex AS
Fekjan 7c, Postboks 147,
N-1378 Nesbru, Norway

Tel: +47 66 77 43 80 Fax: +47 66 84 55 33
E-mail: info@norex.no

RUSSIA
Cooper Industries Russia LLC
Elektrozavodskaya Str 33
Building 4
Moscow 107076, Russia

Tel: +7 (495) 981 3770 Fax: +7 (495) 981 3771
E-mail: mtlrussia@eaton.com

SINGAPORE
Cooper Crouse-Hinds Pte Ltd
No 2 Serangoon North Avenue 5, #06-01 Fu Yu Building
Singapore 554911

Tel: +65 6645 9864 / 6645 9865 Fax: +65 6 645 9865
E-mail: sales.mtlsing@eaton.com

SOUTH KOREA
Cooper Crouse-Hinds Korea
7F. Parkland Building 237-11 Nonhyun-dong Gangnam-gu,
Seoul 135-546, South Korea.

Tel: +82 6380 4805 Fax: +82 6380 4839
E-mail: mtl-korea@eaton.com

UNITED ARAB EMIRATES
Cooper Industries/Eaton Corporation
Office 205/206, 2nd Floor SJ Towers, off. Old Airport Road,
Abu Dhabi, United Arab Emirates

Tel: +971 2 44 66 840 Fax: +971 2 44 66 841
E-mail: mtlgulf@eaton.com

UNITED KINGDOM
Eaton Electric Limited,
Great Marlings, Butterfield, Luton
Beds LU2 8DL

Tel: +44 (0)1582 723633 Fax: +44 (0)1582 422283
E-mail: mtlenquiry@eaton.com

AMERICAS
Cooper Crouse-Hinds MTL Inc.
3413 N. Sam Houston Parkway W.
Suite 200, Houston TX 77086, USA

Tel: +1 281-571-8065 Fax: +1 281-571-8069
E-mail: mtl-us-info@eaton.com

Powering Business Worldwide

Eaton Electric Limited,
Great Marlings, Butterfield, Luton
Beds, LU2 8DL, UK.
Tel: + 44 (0)1582 723633 Fax: + 44 (0)1582 422283
E-mail: mtlenquiry@eaton.com
www.mtl-inst.com

© 2017 Eaton
All Rights Reserved

Publication No. INM F810A Rev 2 280217
February 2017

EUROPE (EMEA):
+44 (0)1582 723633
mtlenquiry@eaton.com

THE AMERICAS:
+1 800 835 7075
mtl-us-info@eaton.com

ASIA-PACIFIC:
+65 6645 9864 / 9865
sales.mtlsing@eaton.com

The given data is only intended as a product description and should not be regarded as a legal warranty of properties or guarantee. In the interest of further technical developments, we reserve the right to make design changes.