Instruction manual
MTL fieldbus networks

December 2024
INM F880 Rev 3

CROUSE-HINDS
SERIES

MTL F880

8 Segment Redundant Fieldbus Power Supply for use with the Yokogawa CENTUM 3000 R3 Control System

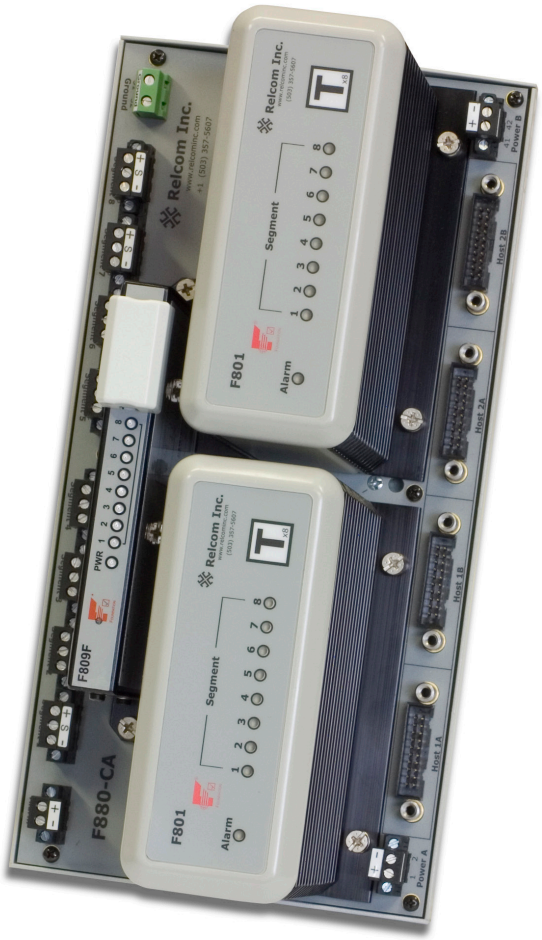

Powering Business Worldwide

THIS PAGE IS LEFT INTENTIONALLY BLANK

CONTENTS

1 OVERVIEW 1

2 DESCRIPTION 1

3 COMPONENTS AND ACCESSORIES 2

4 MECHANICAL 4

4.1 Mounting Orientation 4
4.2 Enclosure Requirements 5
4.2.1 General Requirements 4
4.2.2 Outdoor Mounting 5
4.3 DIN-rail mounting option. 5
4.3.1 Mounting Procedure. 5
4.4 Removal from DIN-rail 5
4.5 Mounting and Removal of the Power Modules. 6

5 ELECTRICAL CONNECTIONS 6

5.1 DC Power Requirements 7
5.2 Power A and Power B. 8
5.2.1 Redundancy 8
5.2.2 Terminator 8
5.3 Alarm Connection. 8
5.4 FInal Segment Connections 9
5.5 Field Segment Connections 9
5.6 Cable Screen / Ground Connections 10
5.7 Chassis Ground Connection 10
5.8 Diagnostic Segment Connectors 11

6 TESTING 11

6.1 F801 Status and Alarm LEDs 11

7 ROUTINE MAINTENANCE 11

8 FM CONTROL DRAWINGS 12

9 ATEX SAFETY INFORMATION. 14

9.1 General 14
9.2 Installation 14
9.3 Inspection and maintenance 15
9.4 Repair 15
9.5 Marking 15

MTL F880 - 8 Segment Redundant Fieldbus Power Supply for use with the Yokogawa CENTUM 3000 R3 Control System

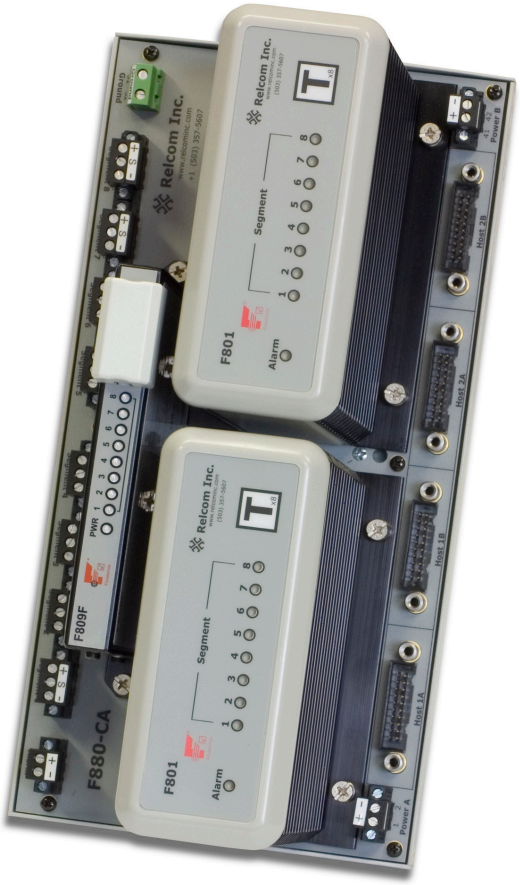

Figure 1 - F880-PS

1 OVERVIEW

The F880 redundant fieldbus power supply is designed to provide redundant power for eight (8) Foundation fieldbus™ H1 segments. Connections are provided on the F880-Cx Carrier for two redundant pairs of Yokogawa ALF111 fieldbus cards using Yokogawa AKB336 cables. Power for the eight fieldbus segments is provided by two F801 or F802 Power Modules mounted to the carrier and operating in a redundant configuration. Failure alarms, galvanic isolation, power conditioning and segment termination are incorporated into each Power Module. A single Power Module may be used where redundancy is not required.

2 DESCRIPTION

For maximum reliability, the module carrier contains no components and only provides interconnections between the power modules and the external connections. The carrier circuit board is supported in a rigid metal frame that protects it from mechanical damage. Secure DIN-rail mounting is provided by integrated fixings. The F801 or F802 module provides galvanic isolation between the 24V DC input power and the fieldbus segments, as required by the IEC61158-2 fieldbus standard and the Fieldbus Foundation™ FF-831 validation test for fieldbus power supplies. There is also galvanic isolation between the fieldbus segments, thereby preventing cross-talk between segments in the event of ground faults in the field wiring. Each segment has its own current limitation and passive fieldbus power conditioner. Termination of the fieldbus

segment is automatically maintained when single or redundant F801 or F802 modules are fitted. The F880-Cx carrier is equipped with connectors that will accept an F809F diagnostic module. The module continuously monitors the performance of each of the eight fieldbus segments, providing information on the network health.

Each Power Module has indicator LEDs to show both its status and that of the eight segments under power. In normal operation, each green 'Segment' LED is lit, showing that the segment is powered. If a segment is shorted, or its voltage is below the rated output, its LED is extinguished, and the red 'Alarm' LED is lit. Redundant 24V DC (nom.) input power is connected to the F880-Cx carrier using two-part pluggable connectors. Field wiring connections are available with either pluggable screw terminals (F880-*S) or pluggable spring clamp terminals (F880-*C).

Three variants of carriers are available in the F880 family to be used in two different types of installations. For large installations where multiple F880 systems will be installed in a cabinet, there are Left (F880-CL) and Right hand (F880-CR) versions that make cabinet wiring symmetrical – see Figure 2b. In smaller installations where carriers are not installed side-by-side, the F880-CA carrier provides terminal numbering and consistent connector polarity – see Figure 2a

3 COMPONENTS AND ACCESSORIES

Product part numbers and their descriptions are given to the right.

PART No.	DESCRIPTION
F801	8 Segment Power Module: 21.5V, 350mA
F802	8 Segment Power Module: 28V, 500mA
F809F	8 Segment Fieldbus Diagnostic Module
F880-CA-P*	Carrier
F880-CL-P*	Left Hand Carrier
F880-CR-P*	Right Hand Carrier
F880-P*	F880-CA-P* and two F801 modules
F880-L*	F880-CL-P* and two F801 modules
F880-R*	F880-CR-P* and two F801 modules
F880-2-P*	F880-CA-P* and two F802 modules
F880-2-L*	F880-CL-P* and two F802 modules
F880-2-R*	F880-CR-P* and two F802 modules
F880-P*-NR	F880-CA-P* and one F801 module
F880-L*-NR	F880-CL-P* and one F801 module
F880-R*-NR	F880-CR-P* and one F801 module

F880-2-P*-NR **F880-CA-P* and one F802 module**

F880-2-L*-NR **F880-CL-P* and one F802 module**

F880-2-R*-NR **F880-CR-P* and one F802 module**

F800-BLK **Blanking Module included with –NR systems**

*** =** **S – Pluggable Screw Terminal Connectors**

C – Pluggable Spring Clamp Connectors

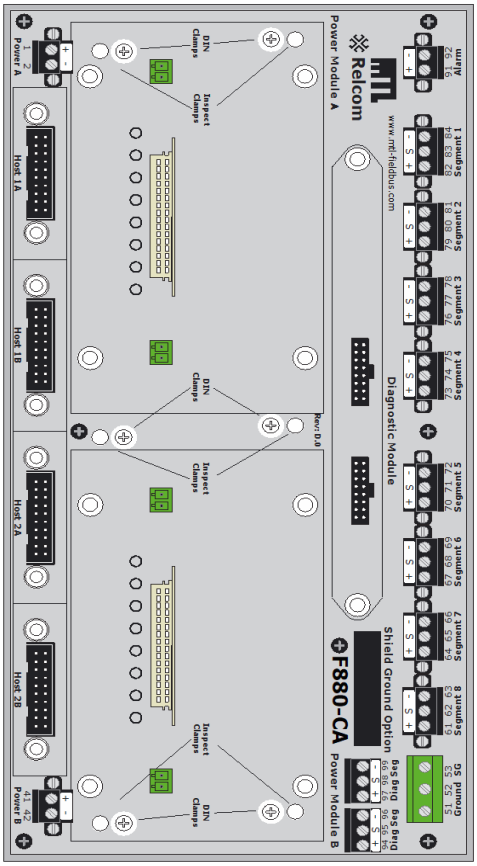

Figure 2a - F880-CA Carrier

Only units produced after date code 0726 include the Diagnostic Segment connectors.

The Shield Ground Option is available on revision D.0 and later units.

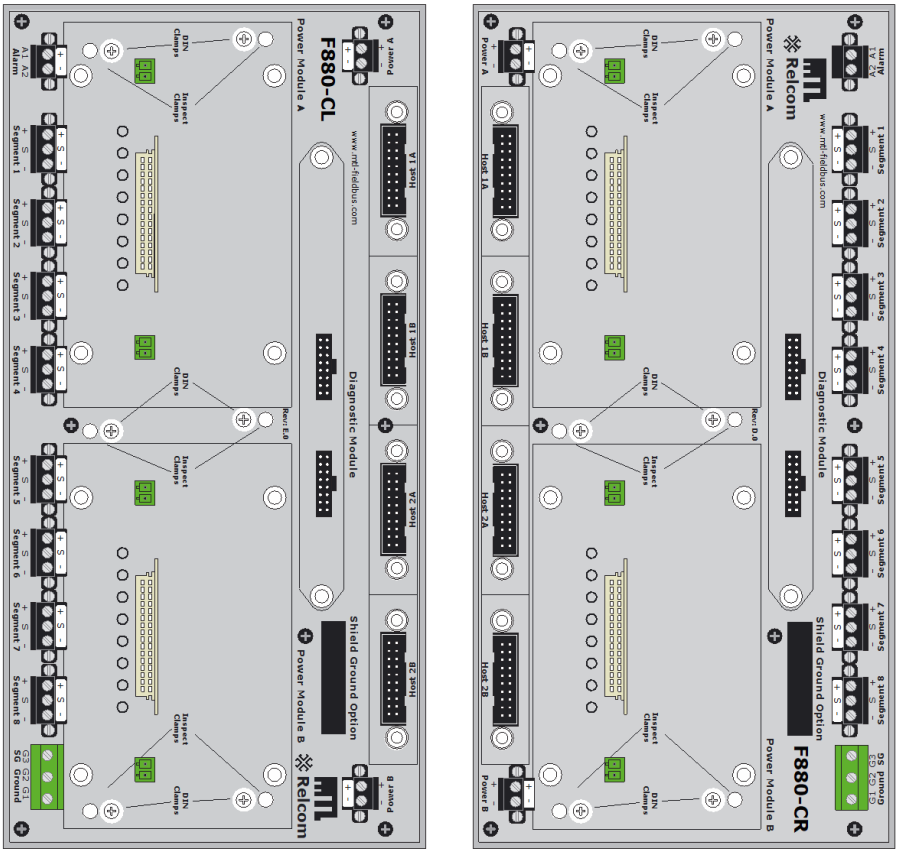

Figure 2b - F880-CL and F880-CR Carrier

The Shield Ground Option is available on revision D.0 and later units.

4 MECHANICAL

4.1 Mounting Orientation

The F880-Cx carriers are designed for mounting on a vertically aligned DIN-rail on a vertical surface. This method of mounting ensures optimum heat dissipation from the Power Modules.

4.2 Enclosure Requirements

4.2.1 General Requirements

The assembly may be mounted in hazardous (classified) areas – see Sections 8 & 9. The following conditions must also be satisfied to ensure safe and reliable operation.

a) Prevent any form of pollution that could compromise the operation of the unit. For example, choose an unpolluted location or a suitable enclosure to protect the assembly.

b) Provide an adequate level of mechanical protection. This can be achieved by selecting a protected location, a suitable enclosure, or a combination of both.

c) Ensure that all cable entries and connections are secure by making provision for the careful routing and securing of all cables.

d) Provide adequate security against unauthorized interference.

e) Ensure that the permitted ambient temperature range of –40°C to +65°C (derate to +50°C for the F802 when loaded above 60% of its full load rating) is not exceeded. Allow for power dissipation within the enclosure and consider the use of shading against direct sunlight.

4.2.2 Outdoor Mounting

If the power system is mounted in an outdoor location, use a suitable enclosure with a minimum of IP54 ingress protection. A higher level of ingress protection rating will be necessary if the working atmosphere is or can be corrosive or if the enclosure is subject to wet or dusty environments.

4.3 DIN-rail Mounting

Before starting to mount the carrier on the DIN rail, rotate all six of the DIN clamp screws counterclockwise (i.e. unscrew) until the clamping tabs reach the position shown in Figure 3 and none of the tabs extend into the channel for the DIN rail.

4.3.1 Mounting Procedure

Before starting to mount the carrier on the DIN rail, rotate all six of the DIN clamp screws counterclockwise (i.e. unscrew) until the clamping tabs reach the position shown in Figure 3a and none of the tabs extend into the channel for the DIN rail.

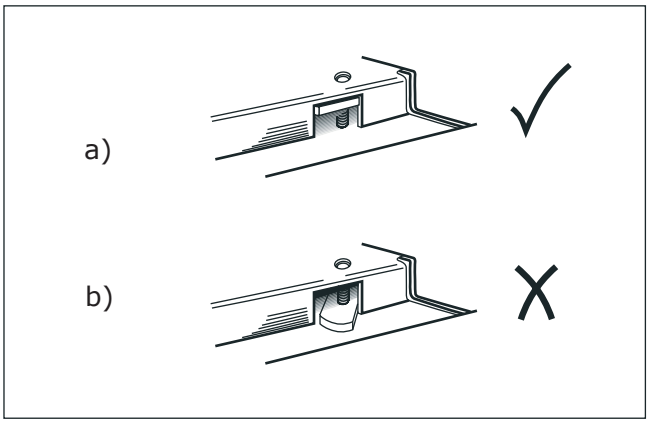

Figure 3 - DIN rail clamp positions before mounting

Press the carrier onto the DIN-rail and rotate each of the DIN clamp screws clockwise until the tab tightens against the DIN-rail. The clamping tabs can be seen through the Inspect clamps holes when they are in the correct position.

4.4 Removal from DIN-rail

The Power Modules must be removed from the carrier to obtain access to the DIN-rail clamp screws. Support the carrier by pressing it to the DIN-rail and unscrew (counterclockwise) the six DIN-rail clamp screws. Turn each screw approximately two full turns when releasing its clamping tab from the rail. Remove carrier.

4.5 Mounting and Removal of the Power Modules

The Power Modules are secured to the carrier with four screw mountings. There are four locating connectors (two for each module) on the module carrier along with mating connectors in the F801 or F802 module. Align the module with the retaining screws and press onto the connector. Hold it in place while tightening the four retaining screws. To remove a Power Module, support the module while unscrewing the four retaining screws at its base. Lift the module off the carrier connector.

Note: Earlier versions of the module carriers do not have locating connectors. Align using the retaining screws furthest from the module connector and rock onto the connector.

5 ELECTRICAL CONNECTIONS

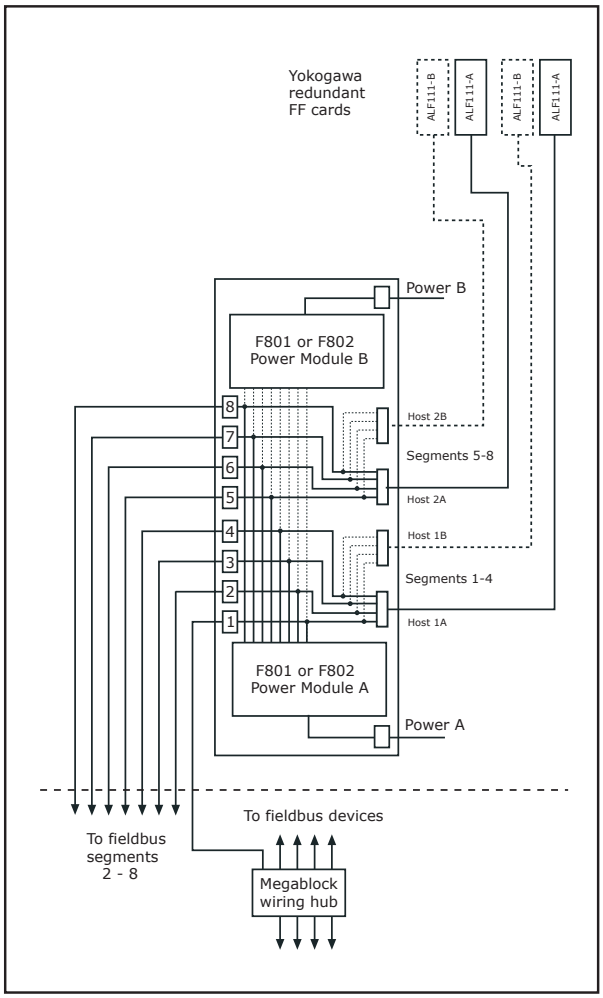

Figure 4- Electrical Block Diagram of F880-Cx

The DC power, Alarm and Field Segment connectors are pluggable and available in a screw terminal version (-xS) or a spring clamp version (-xC). See Figures 5a & 5b. The terminals can accept the following conductor sizes:

Type	Conductor size
Screw terminals (-PS)	0.14 to 2.5mm^2
Spring clamp terminals (-PC)	0.2 to 2.5mm^2

Figure 5a - Screw Terminal

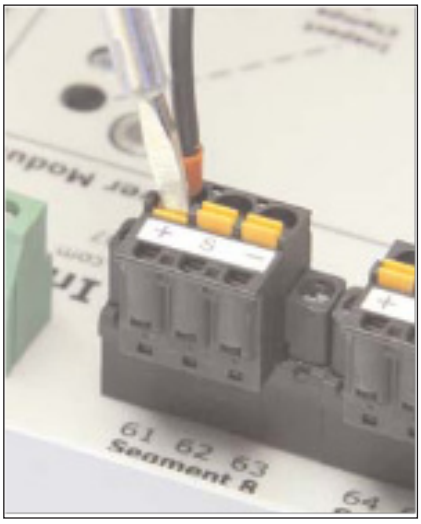

Figure 5b - Spring Terminal

NOTE: When wiring to spring-clamp terminals, use a screwdriver with a 3-4 mm blade and depress the spring-clamp button before inserting the termination cable. See Figure 5b.

5.1 DC Power Requirements

Dual redundant power terminals requiring a nominal input voltage of 24VDC are provided allowing the use of bulk power supplies with a supply range of 19.2–30VDC. Input power cabling and over-current protection devices must be chosen to match the current consumption.

An F880 system, operating with redundant F801 modules at 24VDC, will require 3.5A in total if all eight segments draw the maximum of 350mA. With redundant F802 modules the system will draw 6A when all segments are loaded to 500mA. Note that the total current could be drawn from either the Power A or Power B connection if one power module is removed.

It is also important to size the Bulk Power Supply to handle the inrush current required by the F801 or F802. Inrush is less than 2 times the maximum rated current for the F801 with a duration lasting less than 1ms. For the F802, the inrush is less than 4 times the maximum rated current with a duration less than 10ms.

5.2 Power A and Power B

Power A supplies Power Module A and Power B supplies Power Module B. Each module provides DC power to all eight segments - see Figure 4. DC supply connections are as follows:

Power A	
Pin No. ◆	Connection
1 or +	+ve
2 or-	-ve

Power B	
Pin No. ◆	Connection
41 or +	+ve
42 or-	-ve

Cable lengths on the Power connectors should not exceed 30m nor be routed outside the building.

5.2.1 Redundancy

For **redundant operation,** F801 or F802 modules must be fitted in Power Module A and Power Module B locations. For **non-redundant operation** fit an F801 or F802 in the Power Module A location and apply power to Power A terminals. The F800-BLK would then be placed on the Power Module B connector to allow the alarm circuit to function. Power must be connected to Power B terminals if live replacement of Power Module A is necessary since Power B terminals feed the Power Module B connector.

5.2.2 Terminator

A single terminator is provided automatically on each segment whether one or two Power Modules are used.

5.3 Alarm Connection

In an alarm condition a normally closed, galvanically-isolated relay contact in each F801 or F802 goes to an open-circuit condition. These relays are connected in series on the F880-Cx carrier and are presented at terminals as follows:

Alarm	
Pin No. ◆	Connection
91 or A1	+ve
92 or A2	-ve

In non-redundant applications using a single Power Module, the alarm connections on the carrier will be open-circuit, indicating a permanent alarm condition unless the F800-BLK module is fitted in place of the missing Power Module.

If multiple F880 units are used, a common alarm circuit can be achieved by 'daisy-chaining' the alarm circuits (see Figure 6).

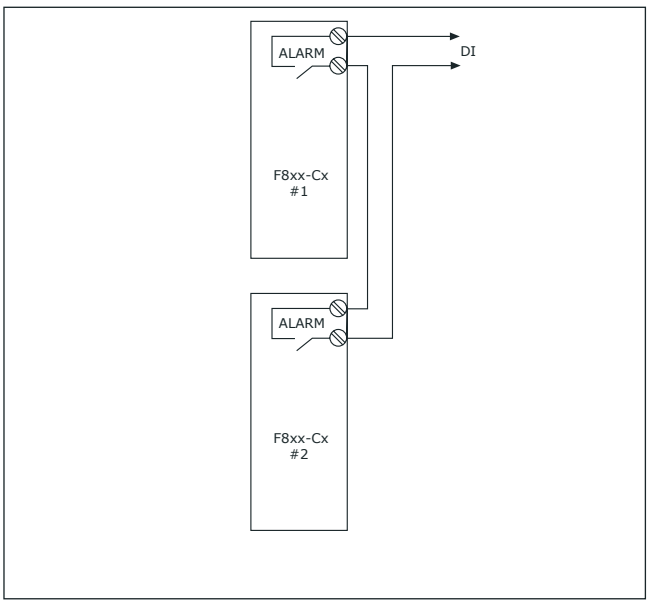

Figure 6 - "Daisy chaining" alarm contacts

5.4 Host Connections

Connectors are provided to permit direct connection via AKB336 cables to Yokogawa ALF111 cards. Four connectors are fitted to provide the following connections. The host cable length should not exceed 30 meters.

Connector	Function	Segments
Host 1A	Main	1- 4
Host 1B	Redundant	1- 4
Host 2A	Main	5 - 8
Host 2B	Redundant	5 - 8

5.5 Field Segment Connections

There are eight field segment connectors. Each connector provides (+), (–) and cable screen (S) connections. See section 5.6 for screen grounding information.

Pin No. ◆	Connection
82 or +	Segment 1 +
83 or S	Segment 1 S
84 or -	Segment 1 -
79 or +	Segment 2 +
80 or S	Segment 2 S
81 or -	Segment 2 -
76 or +	Segment 3 +
77 or S	Segment 3 S
78 or -	Segment 3 -
73 or +	Segment 4 +
74 or S	Segment 4 S
75 or -	Segment 4 -

Pin No. ◆	Connection
70 or +	Segment 5 +
71 or S	Segment 5 S
72 or -	Segment 5 -
67 or +	Segment 6 +
68 or S	Segment 6 S
69 or -	Segment 6 -
64 or +	Segment 7 +
65 or S	Segment 7 S
66 or -	Segment 7 -
61 or +	Segment 8 +
62 or S	Segment 8 S
63 or -	Segment 8 -

5.6 Cable Screen / Ground Connections

For revision D.0 or higher units – Provisions have been made to facilitate tying the 8 screens together and bringing them to the common Screen Ground terminal 53 (or G3). This is a user selectable option that is determined based on the position of the jumper installed in the "Shield Ground Option" connector. Figures 7a and 7b illustrate the two possible positions for the jumper. The carrier is delivered with the jumper installed as shown in figure 7b. As indicated in the text on the jumper, the screens are isolated. To tie the 8 screens together and route them to the SG terminal, remove, reverse and reinstall the jumper as shown in figure 7a. The arrow next to the text indicates which direction to install the jumper into the connector for the indicated function.

When using the screen grounding facility on the F880 carrier, the jumper must be installed correctly (Figure 7a) and an Instrumentation Ground must be routed to Terminal 53 (G3). Fieldbus segments require proper grounding in order to function properly.

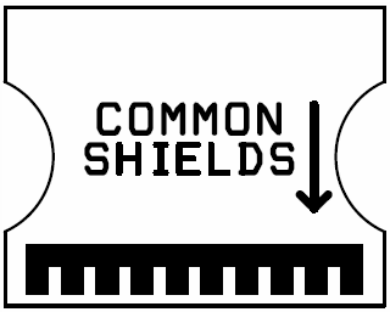

Figure 7a

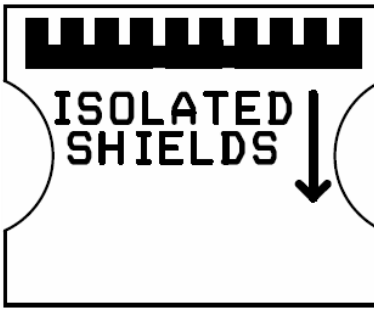

Figure 7b

For earlier units, the segment screens are not linked together nor tied to a common ground connection, so screen grounding must be done externally from the carrier. The carrier revision is on the board surface between the two F80x modules (see figures 2a or 2b). No revision number existed before revision D.0. If the screens of the fieldbus cables are required to be earthed in the equipment cabinet housing the F880 system, a separate earth bar, connected to local instrumentation earth, should be used. Note that the Yokogawa AKB336 cables do not carry segment screens. Screen grounding as recommended by the standards must be done downstream of the F880 field connectors – either in the F880 equipment cabinet or a marshalling cabinet.

5.7 Chassis Ground Connection

The chassis of the carrier should be connected to a Safety or Instrumentation Ground using either of the two screw terminals 51 or 52 (G1 or G2). This ground is needed for the F880 system to meet Electromagnetic Compatibility and Electrical Safety requirements.

5.8 Diagnostic Segment Connectors

Two Diagnostic Segment connectors are available for the F880-CA that has a date code after 0726. They are used in conjunction with the optional F809F Diagnostic Module. Please see the Installation Manual for the F809F for further information. Note that the Diagnostic Segment is completely isolated from any of the 8 segments powered by the F880-Cx carrier. This includes the screen for the Diagnostic Segment.

Pin No.	Connection
94	Diag Seg +
95	Diag Seg S
96	Diag Seg-

Pin No.	Connection
97	Diag Seg +
98	Diag Seg S
99	Diag Seg-

6 TESTING

6.1 F801 Status and Alarm LEDs

The F801 or F802 Power Modules are fitted with nine LEDs, eight to indicate segment status and one to signify an Alarm condition.

Fault Condition	Segment LED	Fault	Alarm contact status
No Fault	Green	Off	Closed
Segment shorted	Off	Red	Open
Output <20V	Off	Red	Open
Input <16V	Off (All)	Red	Open

7 ROUTINE MAINTENANCE

Check the general condition of the installation occasionally to make sure that no deterioration has occurred. At least every two years (and more frequently for particularly harsh environments) check:

- the condition of wire connections, terminations, and screens.
- the dc output voltage on each of the eight fieldbus segments is >21.5V for the F801 or >28V for the F802. This can be performed using a multi-meter or a Relcom FBT-6 Fieldbus Monitor.
- the segment LEDs on the Power Module(s) are functioning and the Alarm LED is not lit .
- the Power Module retaining screws are tight.
- there are no signs of damage or corrosion.

◆ Pin numbers are numeric for the F880-CA carrier and symbolic for the F880-CL and F880-CR carriers.

WARNING !
EXPLOSION HAZARD - DO NOT DISCONNECT EQUIPMENT UNLESS POWER HAS BEEN SWITCHEDOFF OR THE AREA IS KNOWN TO BE NON-HAZARDOUS.

AVERTISSEMENT!
RISQUE D'EXPLOSION – NE PAS DÉBRANCHER L'ÉQUIPEMENT TANT QUE L'ALIMENTATION N'EST PAS COUPÉE OU QUE LA ZONE N'EST PAS CONSIDÉRÉE COMME NON DANGEREUSE

8 FM CONTROL DRAWINGS

HAZARDOUS (CLASSIFIED) LOCATION

Class I, Division 2, Groups A, B, C, D, T4
Class I, Zone 2, IIC T4
-40C <= Tamb <= 65C
-40C <= Tamb <= 50C (F802 total Load > 60% of maximum rating)

TO BE INSTALLED IN AN IP 54 OR BETTER ENCLOSURE

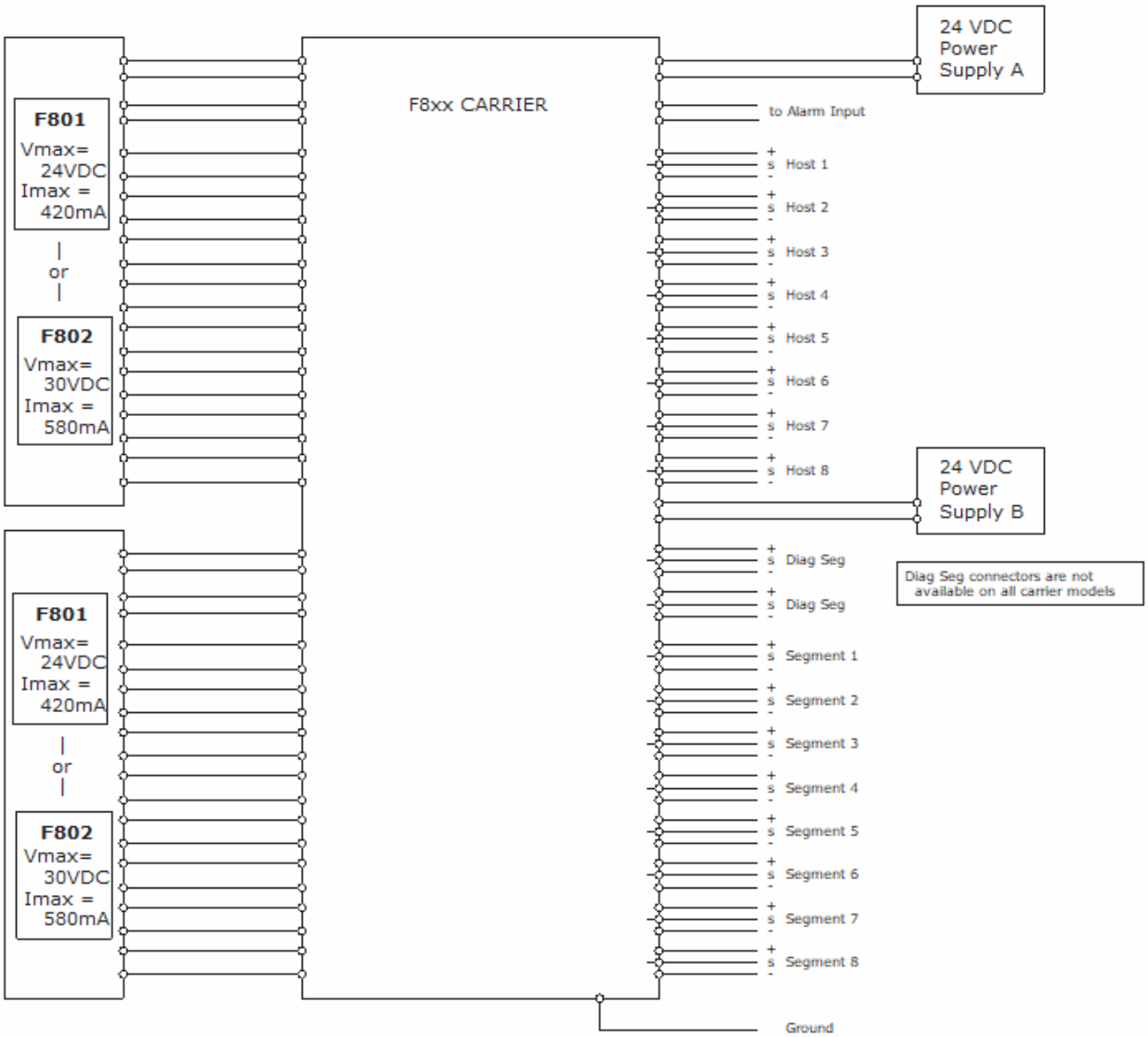

Fuse Power Supply Feed(s) per Carrier Requirements.

The 24VDC Power Supplies may be installed in the Non-hazardous area.

Install F801 or F802 in conjunction with the Control Drawing for the Carrier Unit.

Do not mix an F801 and F802 on the same Carrier Unit.

Part Numbers: **F801, F802**

Installation must be in accordance with the National Electrical Code (NFPA 70, Article 504), ANSI/ISA-RP12.6, or the Canadian Electrical Code (CSA C22.1), as applicable.

WARNING: EXPLOSION HAZARD - DO NOT DISCONNECT EQUIPMENT UNLESS POWER HAS BEEN SWITCHED OFF OR THE AREA IS KNOWN TO BE NON-HAZARDOUS

FM APPROVED

Relcom Inc.
INDUSTRIAL LAN | WIRING COMPONENTS AND TESTERS
2221 Yew Street, Forest Grove, Oregon 97116 USA

Title: CONTROL DRAWING FOR F801/F802 Class I, DIV 2 (ZONE 2) HAZARDOUS LOCATIONS	
Approved By: Mike Strauser	Date: 11-20-08
Drawing Number: 502-086	Rev.: C.0

HAZARDOUS (CLASSIFIED) LOCATION

Class I, Division 2, Groups A, B, C, D, T4
Class I, Zone 2, IIC T4
-40C <= Tamb <= 65C
-40C <= Tamb <= 50C (F802 total load > 60% of rated maximum)
To be installed in an IP54 or better enclosure

WARNING:
EXPLOSION HAZARD - DO NOT DISCONNECT EQUIPMENT UNLESS POWER HAS BEEN SWITCHED OFF OR THE AREA IS KNOWN TO BE NON-HAZARDOUS.

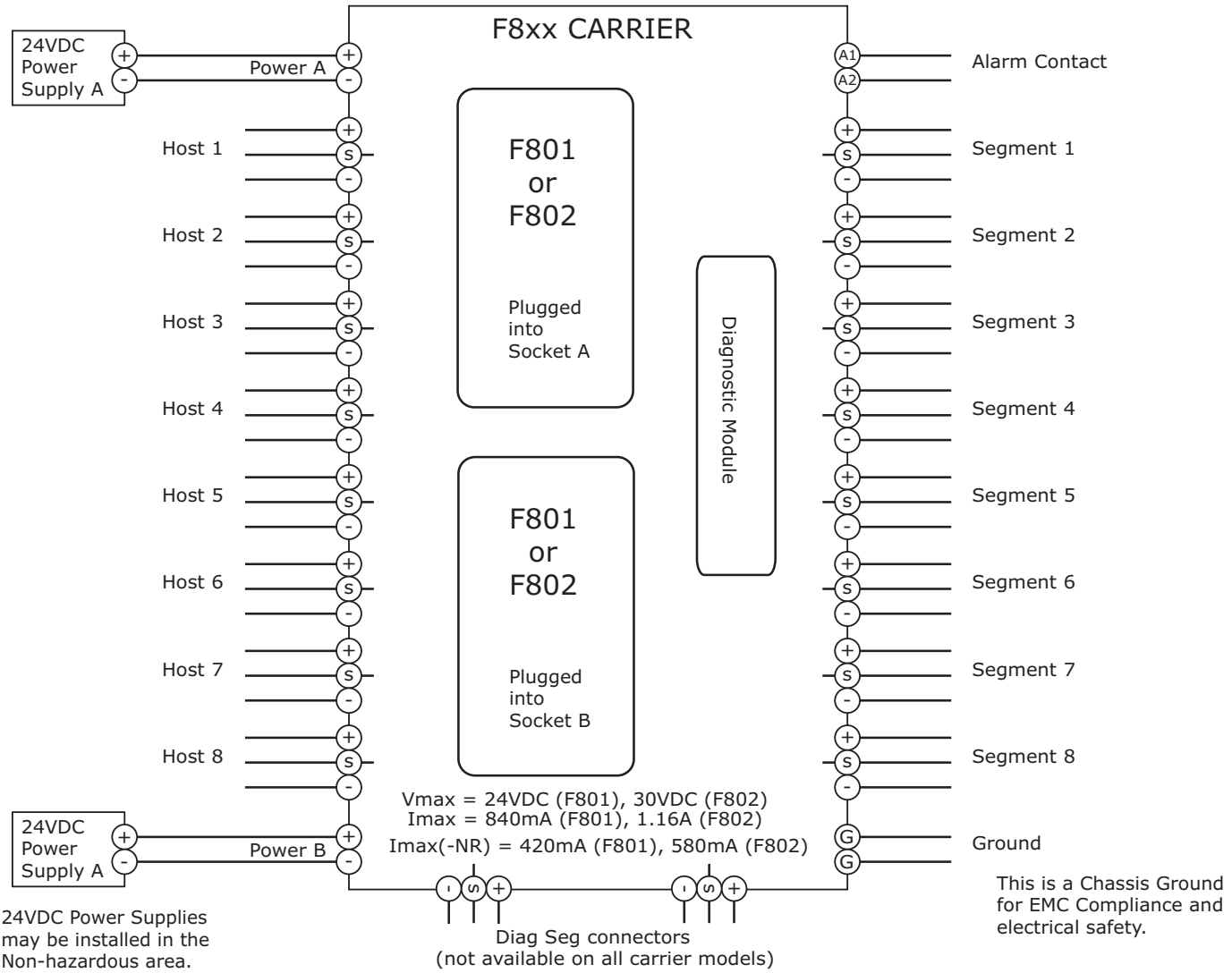

This drawing is representative of the F8xx series of Carriers. There will be minor differences in the various models.

Each of the 8 Segments (Hostx, Segmentx) are isolated from one another and from the Power Supplies. Host Terminals connect to the Host Control system which may be in a non-hazardous area.

Carrier May Contain a Single F801 or F802 module where redundancy is not needed ("-NR" option). In such cases, only one Power Supply connection is needed. Also for the Alarm Contact to work, an F800-BLK module must be installed in place of the missing F801 or F802 module.

Power Supplied to the Carrier must be fused for 8A circuitry.

Do not mix an F801 and F802 on the same Carrier.

Part Numbers:

Carriers	Kits w/ F801	Kits w/ F802
F822-CA	F822-P*[-NR]	F822-2-P*[-NR]
F880-CA	F880-P*[-NR]	F880-2-P*[-NR]
F880-CL	F880-L*[-NR]	F880-2-L*[-NR]
F880-CR	F880-R*[-NR]	F880-2-R*[-NR]
F882-CA	F882-P*[-NR]	F882-2-P*[-NR]
F890-CA	F890-P*[-NR]	F890-2-P*[-NR]
F892-CA	F892-P*[-NR]	F892-2-P*[-NR]

Kits contain 1 or 2 F801 or F802 modules along with the Carrier and Pluggable Connectors.
* = **S** for Pluggable Screw Terminal Connectors, **C** for Pluggable Cage Clamp Connectors.

Installation must be in accordance with the National Electrical Code (NFPA 70, Article 504), ANSI/ISA-RP12.6, or the Canadian Electrical Code (CSA C22.1), as applicable.

FM APPROVED

Relcom Inc.
INDUSTRIAL LAN | WIRING COMPONENTS AND TESTERS
2221 Yew Street, Forest Grove, Oregon 97116 USA

Title:
CONTROL DRAWING FOR F8xx Carriers
CLASS I, DIV 2 (ZONE 2)
HAZARDOUS LOCATIONS

Approved By: Mike Strauser | Date: 2/10/10

Drawing Number: 502-087 | Rev.: D.0

FM Special Conditions of Use

1. The F801/F802 Fieldbus Supply Modules and Carriers shall be installed in compliance with the enclosure, mounting, spacing and segregation requirements of the ultimate application, including a tool removable cover.
2. When installed in hazardous (classified) locations, a warning label must be prominently affixed near the unit(s) which warns that the cables or Fieldbus Supply Modules must not be removed or inserted unless the area is known to be non-hazardous.
3. It is the responsibility of the manufacturer to provide adequate warning markings in French where required by local jurisdictions.

9 ATEX SAFETY INSTRUCTIONS

The following information is in accordance with the Essential Health and Safety Requirements:

- (Annex II) of the EU Directive 2014/34/EU [the ATEX Directive- safety of apparatus]

9.1 General

a) This equipment must only be installed, operated and maintained by competent personnel. Such personnel shall have undergone training, which included instruction on the various types of protection and installation practices, the relevant rules and regulations, and on the general principles of area classification. Appropriate refresher training shall be given on a regular basis. [See clause 4.2 of EN 60079-17].

b) This equipment has been designed to provide protection against all the relevant additional hazards referred to in Annex II of the directive, such as those in clause 1.2.7.

c) This equipment has been designed to meet the requirements of EN 60079-0 and EN 60079-15.

9.2 Installation

a) The installation must comply with the appropriate European, national and local regulations, which may include reference to the code of practice EN 60079-14. In addition, particular industries or end users may have specific requirements relating to the safety of their installations and these requirements should also be met. For the majority of installations the Directive 2014/34/EU [the ATEX Directive - safety of installations].

b) This apparatus may be installed in a safe area and also in a Zone 2 location providing that the relevant installation conditions are met. When mounted in a Zone 2 location the apparatus must be provided with an enclosure, which offers an additional degree of protection appropriate to the area classification.

c) Unless already protected by design, this equipment must be protected by a suitable enclosure against:

   i) mechanical and thermal stresses in excess of those noted in the certification documentation and the product specification

   ii) aggressive substances, excessive dust, moisture and other contaminants.

Read also the Special Conditions for Safe Use (below) for any additional or more specific information.

Specific Conditions of Safe Use:

1. The apparatus is to be installed in an enclosure which maintains a minimum ingress protection rating of IP54 and meets the enclosure requirements of EN 60079-0 and EN 60079-15 as appropriate for the installation.

9.3 Inspection and maintenance

a) Inspection and maintenance should be carried out in accordance with European, national and local regulations which may refer to the standard EN 60079-17. In addition specific industries or end users may have specific requirements which should also be met.

b) Access to the internal circuitry must not be made during operation.

9.4 Repair

This product cannot be repaired by the user and must be replaced with an equivalent certified product.

9.5 Marking

Each device is marked in compliance with the Directive/Regulation. This information applies to products manufactured during or after the year 2007.

Typical certification markings

F801 :

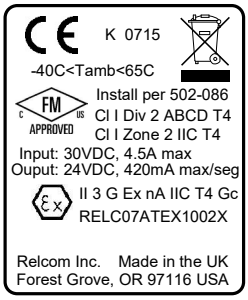

F802 :

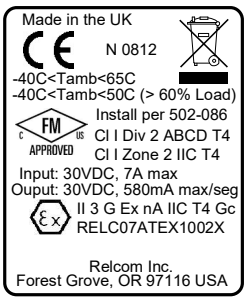

F8xx Carrier :

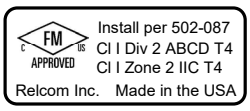

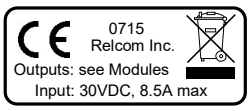

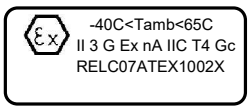

THIS PAGE IS LEFT INTENTIONALLY BLANK

CROUSE-HINDS
SERIES

EATON Crouse-Hinds series

The safety you rely on.

See the complete MTL product portfolio at **www.eaton.com**

For more information:
If further assistance is required, please contact an authorised MTL Distributor, Sales Office, or Customer Service Department

https://www.mtl-inst.com/contact

Eaton Electric Ltd
Great Marlings, Butterfield, Luton
Beds LU2 8DL

Tel: +44 (0) 1582 723633 Fax: +44 (0)1582 422283
E-mail: mtlenquiry@eaton.com
www.eaton.com

Powering Business Worldwide

Eaton Electric Limited,
Great Marlings, Butterfield, Luton
Beds, LU2 8DL, UK.
Tel: + 44 (0)1582 723633 Fax: + 44 (0)1582 422283
E-mail: mtlenquiry@eaton.com
www.mtl-inst.com

© 2024 Eaton
All Rights Reserved
Publication No. INM F880 Rev 3 061224
December 2024

EUROPE (EMEA):
+44 (0)1582 723633
mtlenquiry@eaton.com

THE AMERICAS:
+1 800 835 7075
mtl-us-info@eaton.com

ASIA-PACIFIC:
+65 6 645 9888
sales.mtlsing@eaton.com

The given data is only intended as a product description and should not be regarded as a legal warranty of properties or guarantee. In the interest of further technical developments, we reserve the right to make design changes.