F890

Redundant fieldbus power supply

- **Redundant fieldbus power for FOUNDATION™ fieldbus cards**
- **8-segment redundancy**
- **High-density, compact design**
- **Fully isolated**
- **Hot swappable power modules***
- **Low power dissipation**
- **Zero component carrier**
- **On-line diagnostics option**
- **Redundant power & conditioning**
- **Vertical DIN-rail mounting**
- **F801 output 21.5V, 350mA**
- **F802 output 28V, 500mA**

The F890 fieldbus power system is designed to provide redundant power for eight Foundation™ fieldbus H1 segments when used with the Emerson DeltaV or another non-proprietary cabled fieldbus system.

Power for the fieldbus segments is provided by two power modules - F801s or F802s - operating in redundant configuration (load sharing). Failure alarms, galvanic isolation, power conditioning and segment termination are incorporated into each F80x module. In simplex applications, a single F80x module may be used. Termination of the fieldbus segments is automatically maintained when single or redundant F80x modules are fitted.

For extreme reliability, the module carrier has no components and only provides interconnections between the power modules and external connections. It is supported in a rigid metal frame that protects the circuit board from mechanical damage. Secure DIN-rail mounting is provided by integrated fixings.

Each F80x module monitors the output of the eight fieldbus segments and indicates an alarm by means of a built-in, normally closed relay if any of the segments is shorted, or below the minimum output voltage threshold. Failure of either of the bulk power input supplies is also annunciated. The alarm contacts are volt-free and galvanically isolated from other circuitry. Connections to the alarm relays are made via terminals on the F890-CA carrier. A separate alarm module is not required for this function. LED indicators also show the status of each F80x module and the eight individual segments. In normal operation, each segment LED is lit, showing that the segment is powered. If a segment is shorted, this LED is extinguished, and the module Alarm LED is lit.

A separate physical layer diagnostics module may be installed on the carrier to automatically collect and distribute additional diagnostic information for each of the eight fieldbus segments. For more information see the F809F-Plus product specification.

The F80x module provides galvanic isolation between the 24V DC input power and the fieldbus segments, as required by the IEC61158-2 fieldbus standard and the Fieldbus Foundation™ FF-831 validation test for power supplies. There is also galvanic isolation between the fieldbus segments, thereby preventing multiple segment failures due to ground faults on more than one segment. Each segment has its own fieldbus power conditioner and current limitation.

Redundant 24V DC (nom.) input power is connected to the F890 carrier using two-part pluggable connectors. Field wiring connections are available with either pluggable screw terminals (F890-PS), or pluggable spring clamp terminals (F890-PC).

FOUNDATION™ fieldbus is a trademark of Fieldbus Foundation™, Austin, Texas.

Powering Business Worldwide

Eaton Electric Limited,
Great Marlings, Butterfield, Luton
Beds, LU2 8DL, UK.
Tel: + 44 (0)1582 723633 Fax: + 44 (0)1582 422283
E-mail: mtlenquiry@eaton.com
www.mtl-inst.com

© 2024 Eaton
All Rights Reserved
Publication No. EPS F890 Rev 13
November 2024

SPECIFICATION

Location of equipment
Safe area,
Class I Div 2 Groups ABCD T4 or
Class I Zone 2 IIC T4

INPUT	F801	F802
Input voltage (DC)	19.2 - 30.0V	19.2 - 30.0V
Current consumption (24V input, all outputs fully loaded)	3.5A*	6A*
Total Power dissipation (24V input, all outputs fully loaded)	20W*	24W*

* Redundant operation

OUTPUT	F801	F802
Number of channels	Eight (8)	Eight (8)
Voltage (DC)	21.5V - 24.0V	28.0V - 30.0V
Design current (per segment)	0 to 350mA	0 to 500mA
Current limit	> 370mA	> 520mA
Minimum load	0mA	0mA
Isolation		
Fieldbus to input power:	250V AC rms withstand	
Segment to segment:	200V DC withstand	

ALARMS
Alarm contact rating
1A maximum @ 30V DC maximum
Alarm contact status
Normally closed

Alarm threshold	F801	F802
Segment output	<19V DC	<24V DC

ELECTRICAL CONNECTIONS
System, Field, Power & Alarm terminals
Pluggable rising cage-clamp screw terminals (-PS)
Conductor size: 0.14 to 2.5 mm^2
Pluggable spring-clamp screw terminals (-PC)
Conductor size: 0.2 to 2.5 mm^2
Diagnostics and ground terminals
Fixed screw terminal connector 0.14 to 2.5 mm^2
Cable screen ground connections (version E.0 or higher)
User-selectable jumper for segment shields: isolated (default) or interconnected and ground connection
Terminators
A single termination is provided automatically when using either 1 or 2 power modules

ENVIRONMENTAL

Ambient temperature	F801	F802
Operating (full load)	—40°C to +65°C	—40°C to +50°C
Operating (60% load)	—40°C to +65°C	—40°C to +65°C
Storage	—40°C to +85°C	—40°C to +85°C

Note: *Temperature range applies only when fitted to a vertical DIN rail mounted on a vertical plane.*
Ingress protection
IP20 to BS EN60529 (Additional protection by use of enclosure)

MECHANICAL
Mounting method
Integrated fixings for 'Top hat' DIN rail, 35mm x 7.5mm to EN50022
Weights
F801: 1.45kg
F802: 1.50kg
F890-CA-P*: 0.92kg

ELECTRICAL
EMC Compliance
To EN61326:1998 Electrical equiment for measurement, control and laboratory use - EMC requirements

F890 - BLOCK DIAGRAM

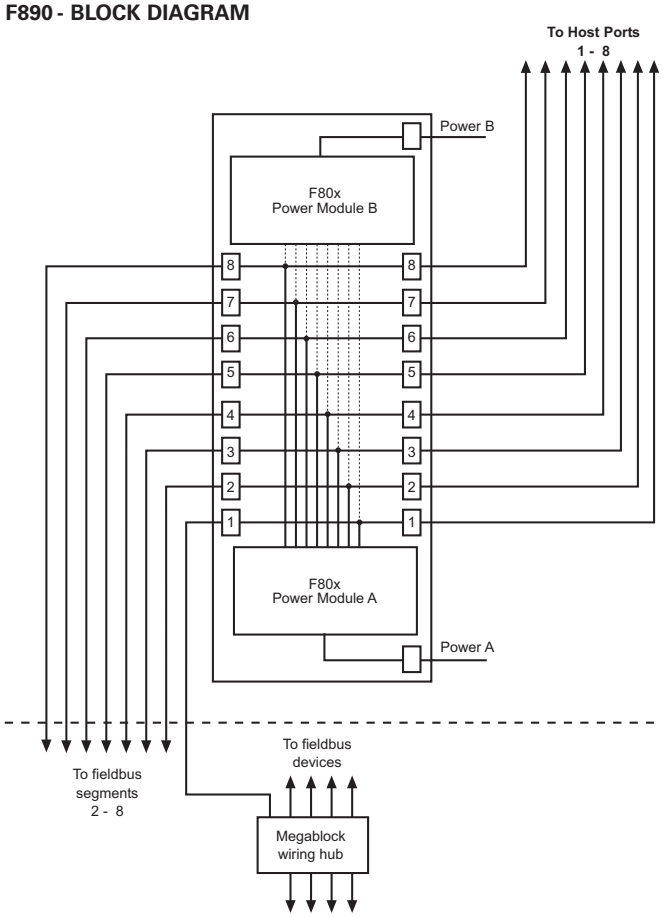

The above diagram shows a block diagram of how the F890 is wired. Note that the Chassis Ground and Alarm connection are not shown. The Diagnostic module is also not shown (see the F809F-Plus product specification). For detailed wiring information see the Installation Instructions for the F890 (Document number 502-090).

PHYSICAL NETWORKS

IEC61158-2
ISA-S50.02 Part 2-1992
FOUNDATION™ fieldbus H1
Profibus PA

ORDERING INFORMATION

DESCRIPTION	PART NO
Carrier, unpopulated	F890-CA-P*
8-segment power module: 21.5V, 350mA	F801
8-segment power module: 28V, 500mA	F802
F890-CA-P*and two F801 modules	F890-P*
F890-CA-P*and one F801 module	F890-P*-NR
F890-CA-P*and two F802 modules	F890-2-P*
F890-CA-P*and one F802 module	F890-2-P*-NR
Blanking modules included with -NR systems	F800-BLK
Fieldbus diagnostic module	F809F-Plus

* = S or C S = Pluggable Screw Terminal Connectors
C = Pluggable Spring Clamp Connectors

F801 PARAMETERS

a)

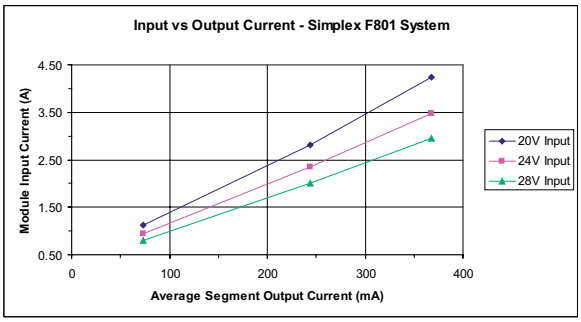

b)

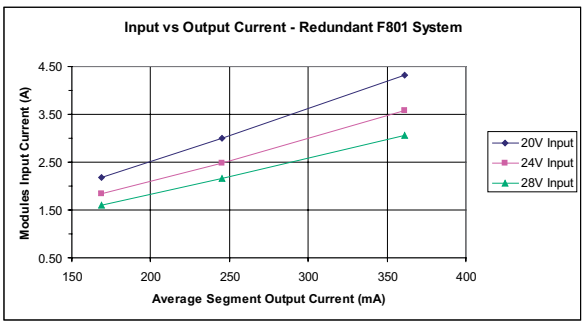

c)

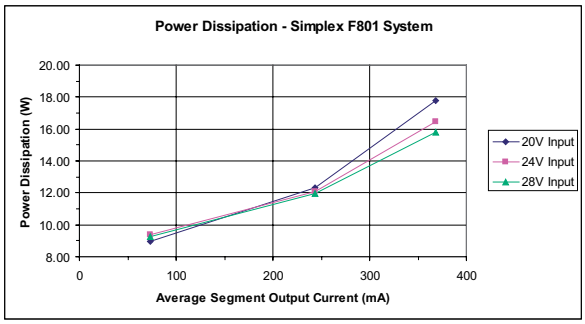

d)

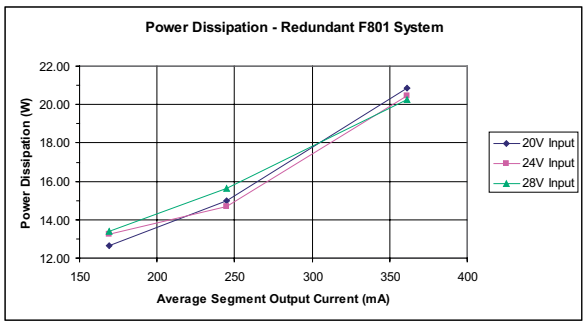

F802 PARAMETERS

a)

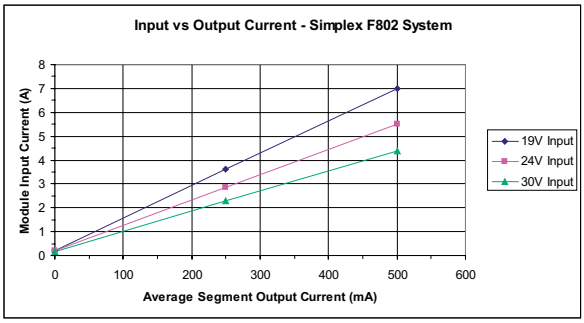

b)

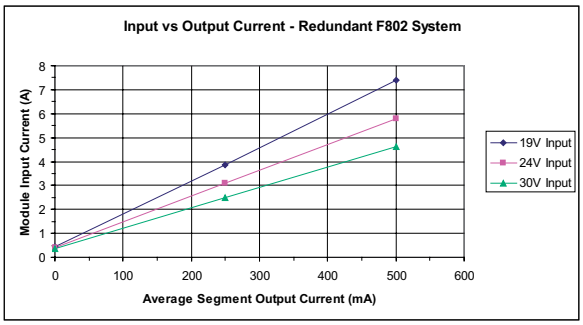

c)

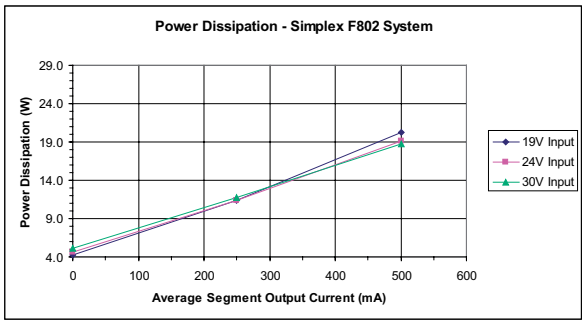

d)

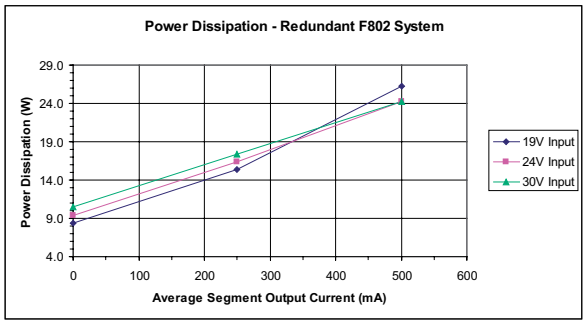

F80x module top panels showing indicators

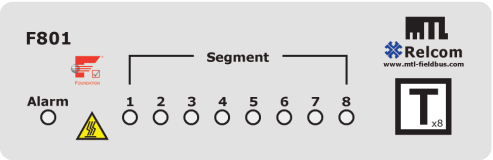

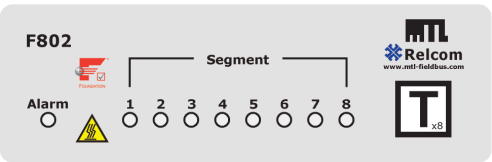

Linking alarm circuits

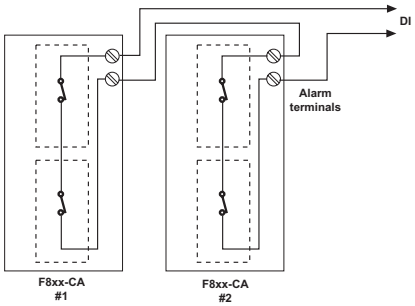

F890-P* DIMENSIONS

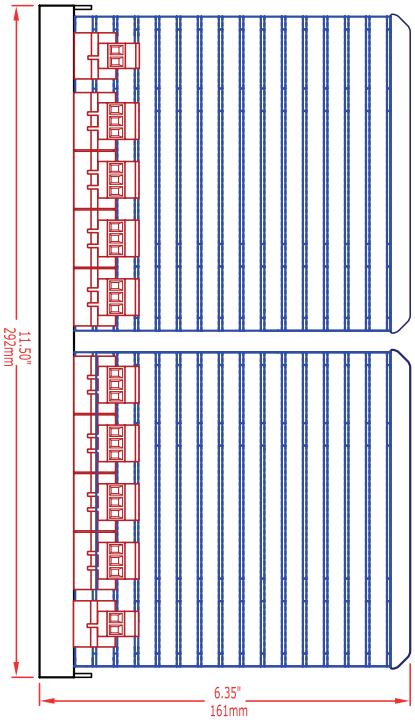

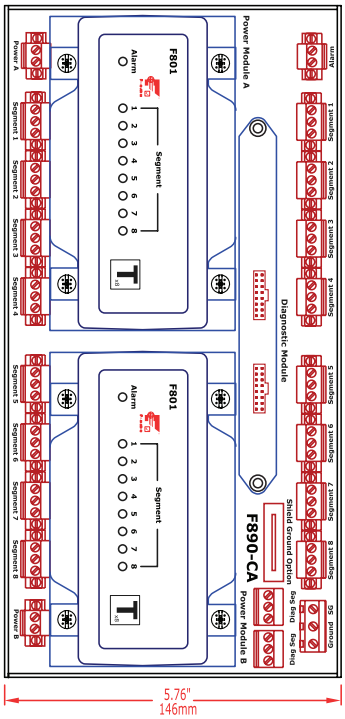

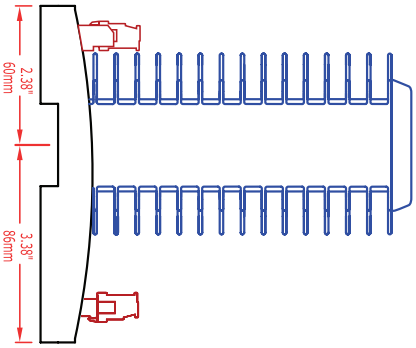

Only units produced after date code 1012 include the Diagnostic Segment connectors.

The Shield Ground Option is available on revision E.0 and later units.

CAD drawings are available on-line at www.mtl-inst.com

APPROVALS - *for the latest certification information visit www.mtl-inst.com/support/certificates/*

Region (Authority)	Standard	Certificate	Approved for	Ratings
EU (Relcom)	EN61326		Class A Industrial Locations	CE
(Fieldbus Foundation™)	FF-831	PS001700 - (F801) PS001900 - (F802)		Power Supply Type 132
US (FM)	3600, 3611, 3610	3025124 - (F801) 3033657 - (F802)	Class I, Div 2, ABCD, T4 Class I, Zone 2, IIC, T4	Vmax = 24V (F801) = 30V (F802)
Canada (FM)	C22.2 No. 213 C22.2 No. 142	3025124C - (F801) 3033657C - (F802)	Class I, Div 2, ABCD, T4 Class I, Zone 2, IIC, T4	Vmax = 24V (F801) = 30V (F802)
EU (Relcom)	EN 60079-0 EN 60079-15	RELC07ATEX1002X (F801 + F802)	Ⓔx II 3 G Ex nA IIC T4 Gc	Uo = 24V (F801) = 30V (F802)

Powering Business Worldwide

Eaton Electric Limited,
Great Marlings, Butterfield, Luton
Beds, LU2 8DL, UK.
Tel: + 44 (0)1582 723633 Fax: + 44 (0)1582 422283
E-mail: mtlenquiry@eaton.com
www.mtl-inst.com

© 2024 Eaton
All Rights Reserved
Publication No. EPS F890 Rev 13 271124
November 2024

EUROPE (EMEA):
+44 (0)1582 723633
mtlenquiry@eaton.com

THE AMERICAS:
+1 800 835 7075
mtl-us-info@eaton.com

ASIA-PACIFIC:
+65 6 645 9888
sales.mtlsing@eaton.com

The given data is only intended as a product description and should not be regarded as a legal warranty of properties or guarantee. In the interest of further technical developments, we reserve the right to make design changes.