Instruction manual
MTL industrial security

March 2018
INM MTLTofino 9202-ETS Rev 6

CROUSE-HINDS SERIES

MTL Tofino® 9202-ETS

Industrial securitysolution

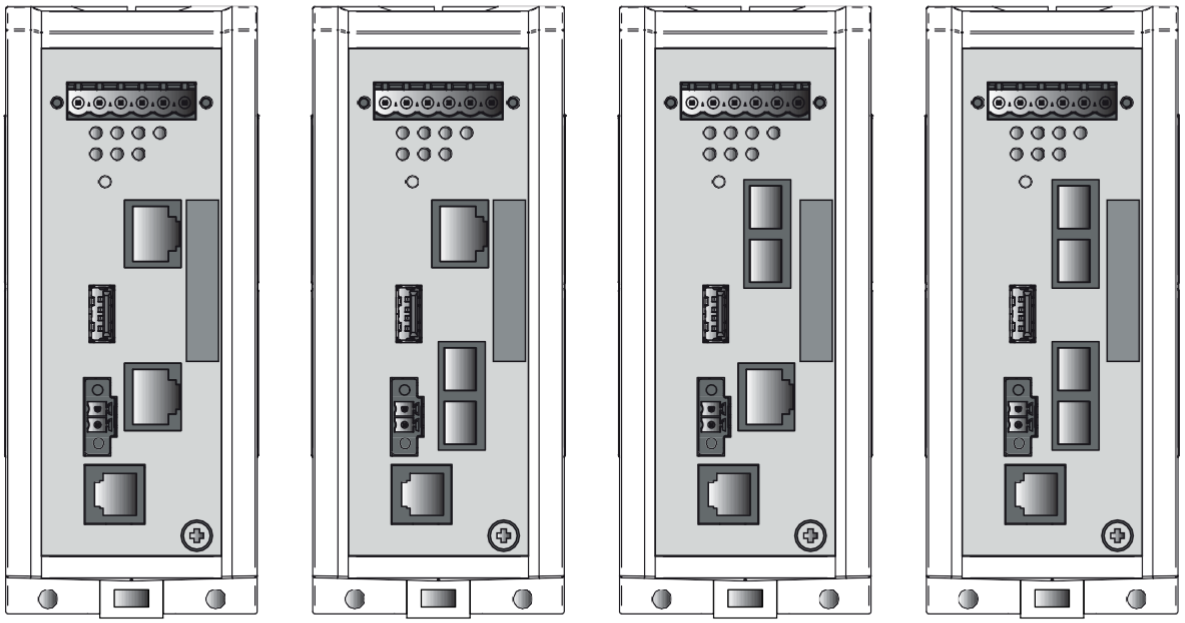

04009700104031800 0

Powering Business Worldwide

Manuals and software are protected by copyright. All rights reserved. The copying, reproduction, translation, conversion into any electronic medium or machine scannable form is not permitted, either in whole or in part. An exception is the preparation of a backup copy of the software for your own use. For devices with embedded software, the end-user license agreement included in the management software installer package applies.

The performance features described here are binding only if they have been expressly agreed when the contract was made. This document was produced by Eaton Electric Limited, according to the best of the company's knowledge. Eaton reserves the right to change the contents of this document without prior notice. Eaton can give no guarantee in respect of the correctness or accuracy of the information in this document.

Eaton can accept no responsibility for damages, resulting from the use of the network components or the associated operating software. In addition, we refer to the conditions of usespecified in the license contract.

You can get the latest version of this manual on the Internet at:-

www.mtl-inst.com

CONTENTS

Declaration of Conformity iv

Safety instructions 1-10

About this manual 11

1 DESCRIPTION 12

1.1 General description 13

1.2 Device View 14

1.3 Power Supply 14

1.4 Ethernet ports 14

1.4.1 10/100 Mbit/s twisted pair port 14

1.4.2 100 Mbit/s F/O port 14

1.5 Display elements 15

1.5.1 Device state 15

1.6 Controls 16

1.7 Management interfaces 16

1.7.1 V.24 interface 16

1.7.2 USB interface 16

1.8 Input/output interfaces 17

1.8.1 Signal contact (Digital output) 17

1.8.2 Digital input 17

2 INSTALLATION 18

2.1 Overview 18

2.2 Checking the package contents 18

2.3 Installing and grounding the device 18

2.3.1 Installing the device onto the DIN rail 18

2.3.2 Mounting on a vertical flat surface 19

2.3.3 Grounding the device 20

2.4 Connecting the terminal blocks 20

2.4.1 Connecting the power supply and signal lines 20

2.4.2 Wiring the digital input (optional) 21

2.5 Operating the device 22

2.6 Connecting data cables 22

3 CONFIGURATION 23

3.1 Making basic settings 23

3.1.1 USB interface 24

3.2 Fault LED 25

3.3 Operating Modes 26

4 MAINTENANCE AND SERVICE 27

5 DISASSEMBLY 28

6 TECHNICAL DATA 29

6.1 General technical data 29

6.2 Digital Input 30

6.3 Dimension drawings 30

6.4 EMC and immunity 31

6.5 Nertwork range 32

6.6 Power consumption/power output 32

6.7 Scope of delivery 32

6.8 Accessories 32

6.9 Underlying technical standards 33

Declaration of Conformity

A printed version of the Declaration of Conformity has been provided separately within the original shipment of goods. However, you can find a copy of the latest version at: http://www.mtl-inst.com/certificates

SAFETY INSTRUCTIONS

General safety instructions

You operate this device with electricity. Improper usage of the device entails the risk of physical injury or significant property damage. The proper and safe operation of this device depends on proper handling during transportation, proper storage and installation, and careful operation and maintenance procedures.

- Before connecting any cable, read this document, and the safety instructions and warnings.
- Operate the device with undamaged components exclusively.
- The device is free of any service components. In case of a damaged or malfunctioning the device, turn off the supply voltage and return the device to back to us for inspection.

WARNING	**UNCONTROLLED MACHINE ACTIONS** To avoid uncontrolled machine actions caused by data loss, configure all the data transmission devices individually. Before you start any machine which is controlled via data transmission, be sure to complete the configuration of all data transmission devices. **Failure to follow these instructions can result in death, serious injury, or equipment damage .**

Qualification requirements for personnel

- Only allow qualified personnel to work on the device.

Qualified personnel have the following characteristics:

- Qualified personnel are properly trained. Training as well as practical knowledge and experience make up their qualifications. This is the prerequisite for grounding and labeling circuits, devices, and systems in accordance with current standards in safety technology.
- Qualified personnel are aware of the dangers that exist in their work.
- Qualified personnel are familiar with appropriate measures against these hazards in order to reduce the risk for themselves and others.
- Qualified personnel receive training on a regular basis.

Intended usage

- Use the product only for the application cases described in this manual.
- Operate the product only according to the technical specifications. See “Technical data” on page 29.
- Connect to the product only components suitable for the requirements of the specific application case.

National and international safety regulations

Verify that the electrical installation meets local or nationally applicable safety regulations.

Grounding the device

Grounding the device is by means of a separate ground connection on the device.

- Ground the device before connecting any other cables.
- Disconnect the grounding only after disconnecting all other cables.

The overall shield of a connected shielded twisted pair cable is connected to the ground connector on the front panel as a conductor.

Supply voltage

The supply voltage is electrically isolated from the housing.

Connect only a supply voltage that corresponds to the type plate of your device.

Every time you connect the electrical conductors, make sure that the following requirements are met:

- The power supply conforms to overvoltage category I or II.
- The power supply has an easily accessible disconnecting device (e.g., a switch or a plug). This disconnecting device is clearly identified. So in the case of an emergency, it is clear which disconnecting device belongs to which power supply cable.
- The electrical wires are voltage-free.
- The power supply is Class 2 compliant.
- The supply voltage inputs are designed for operation with safety extra-low voltage. Connect only SELV circuits with voltage restrictions in line with IEC/EN 60950-1 to the supply voltage connections.
- Supply with AC voltage:

  A fuse is located in the outer conductor of the power supply. The neutral conductor is on ground potential. Otherwise, a fuse is also located in the neutral conductor.

  Regarding the properties of this fuse: See “General technical data” on page 29.
- Supply with DC voltage:

  A fuse suitable for DC voltage is located in the plus conductor of the power supply.

  The minus conductor is on ground potential. Otherwise, a fuse is also located in the minus conductor.

  Regarding the properties of this fuse: See “General technical data” on page 29.
- The wire diameter of the power supply cable is at least 0.5mm² (AWG20) on the supply voltage input.

- The cross-section of the protective conductor is the same size as or bigger than the cross-section of the power supply cables.
- The power supply cables used are permitted for the temperature range required by the application case.
- Relevant for North America:
  Use 60/75 or 75 °C copper (Cu) wire only.

Internal fuses are triggered only in the case of a detected error in the device. In case of damage or malfunction of the device, turn off the supply voltage and return the device to the plant for inspection.

Input/output interfaces

Every time you connect the electrical conductors, make sure that the following requirements are met:

- The electrical wires are voltage-free.
- The connected voltage is limited by a current limitation device or a fuse.
  Observe the electrical threshold values for the signal contact.
  See “General technical data” on page 29.
  Observe the electrical threshold values for the digital input.
  See “Digital input” on page 30.

Installation site requirements

- Verify that there is at least 4 in (10 cm) of space above and below the device.
- Verify that there is at least 0.8 in (2 cm) of space on the right and left sides of the device.
- Install the device in a fire protected enclosure according to EN 60950-1.

Housing

Only technicians authorized by the manufacturer are permitted to open the housing.

- Never insert pointed objects (narrow screwdrivers, wires, etc.) into the device or into the connection terminals for electric conductors. Do not touch the connection terminals.
- Keep the ventilation slits free to ensure good air circulation.
- Install the device in the vertical position.
- At ambient temperatures > 140 °F (60 °C):

  The surfaces of the device housing may become hot. Avoid touching the device while it is operating.

LED or laser components

LED or LASER components according to IEC 60825-1 (2007): CLASS

1 LASER PRODUCT

CLASS 1 LED PRODUCT **Input/output interfaces**

CE marking

The labeled devices comply with the regulations contained in the following European directive(s):

2014/30/EU (EMC)
Directive of the European Parliament and the council for standardizing the regulations of member states with regard to electromagnetic compatibility.

2011/65/EU (RoHS)
Directive of the European Parliament and of the Council on the restriction of the use of certain hazardous substances in electrical and electronic equipment.

In accordance with the above-named EU directive(s), the EU conformity declaration will be at the disposal of the relevant authorities at the following address:

Eaton Electric Limited,
Great Marlings, Butterfield, Luton
Beds LU2 8DL

Tel: +44 (0)1582 723633 Fax: +44 (0)1582 422283
E- mail: mtlenquiry@eaton.com

The device can be used in the industrial sector.

- Interference immunity: EN 61000-6-2
- Emitted interference: EN 55022

You find more information on technical and industry standards here:
“Technical data” on page 29.

WARNING	This is a class A device. This device can cause interference in living areas, and in this case the operator may be required to take appropriate measures.

NOTE:

The assembly guidelines provided in these instructions must be strictly adhered to in order to observe the EMC threshold values.

Relevant for use in North America

Use this device solely in Class 2 Circuits.

continued overleaf

Relevant for use in Hazardous Locations

Suitable for use in Hazardous locations Class I Division 2, Groups A, B, C, D and Class 1 Zone 2, IIC.

The **relay connections** are to be installed and used within their Entity Parameters as per Control Drawing 000174247DNR – see the following drawings

WARNING	**Avertissement** Risque d'explosion- Ne pas débrancher tant que le circuit est sous tension à moins que l'emplacement soit connu pour ne contenir aucune concentration de gaz inflammable.

WARNING	**Avertissement** Risque d'explosion- La substitution de tout composant peut rendre ce matériel incompatible pour une utilisation en classe I, division 2 / zone 2.

CONTROL DRAWING - MTL Tofino 9202-ETS
for Use in Hazardous Locations
Class I Division 2, Groups A, B, C, D

Rev. 0 01-12- | Document No.: | Page 1/2

Ordinary Location, Non-Hazardous Area, Nonexplosive Atmosphere

Class I Division 2 Groups A, B, C, D Hazardous Location

Nonincendive field wiring parameters:
THE RELAY TERMINALS ARE DEPENDENT UPON THE FOLLOWING ENTITY PARAMETERS: *)

V_{max}	I_{max}	C_i	L_i
30 V	90 mA	3nF	1 µH

The USB connector is for temporary connection only. Do not use, connect, or disconnect unless area is known to be non-hazardous. Connection or disconnection in an explosive atmosphere could result in an explosion.

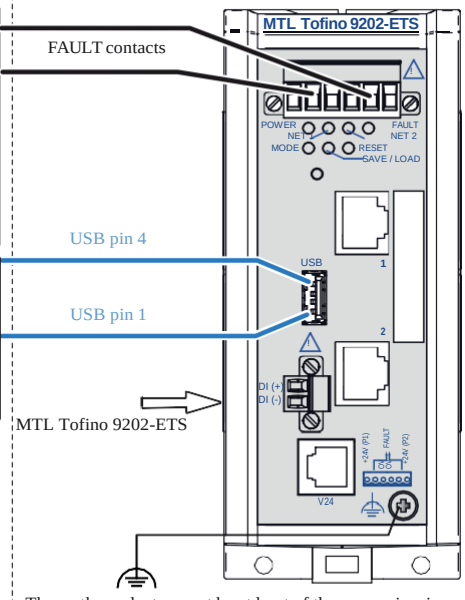

The earth conductor must be at least of the same wire size (mm² or AWG) as the supply conductors.

CONTROL DRAWING - MTL Tofino 9202-ETS
for Use in Hazardous Locations
Class I Division 2, Groups A, B, C, D

Rev. 0 01-12-2014 | Document No.: 000174247DNR | Page 2/2

SUITABLE FOR USE IN CLASS I DIVISION 2 GROUPS A, B ,C ,D HAZARDOUS LOCATIONS, OR NONHAZARDOUS LOCATIONS ONLY.
For use in HARDOUS LOCATIONS only allowed for model No´s. which are labelled accordingly.

Nonincendive field wiring circuits must be wired in accordance with the National Electrical Code (NEC), NFPA 70 , article 501.
USB AND RELAY CONTACTS (FAULT): Install per Control Drawing 000174247DNR.

WARNING - EXPLOSION HAZARD – SUBSTITUTION OF ANY COMPONENTS MAY IMPAIR SUITABILITY FOR CLASS I DIVISION 2 / ZONE 2.
WARNING - EXPLOSION HAZARD - DO NOT DISCONNECT EQUIPMENT WHILE THE CIRCUIT IS LIVE OR UNLESS THE AREA IS KNOWN TO BE FREE OF IGNITABLE CONCENTRATIONS.

***) Notes:**
The nonincendive field wiring circuit concept allows interconnection of nonincendive field wiring apparatus and associated nonincendive field wiring apparatus using any of the wiring methods permitted for unclassified locations when certain parametric conditions are met.
Capacity: $C_a \geq C_i + C_{Cable}$; Inductivity: $L_a \geq L_i + L_{Cable}$
The maximum cable length has to be determined as follows:
(a) max. Cable Length < $(L_a - L_i)$ / Cable $_L$
("Cable $_L$ " denotes the inductance per unit length of used cable) and
(b) max. Cable Length < max. Cable Length < $(Ca - C_i)$ / Cable $_C$
("Cable $_C$ " denotes the capacitance per unit length of used cable).
The lower value of (a) and (b) is to apply.

FCC note

This device complies with part 15 of the FCC rules. Operation is subject to the following two conditions: (1) this device may not cause harmful interference; (2) this device must accept any interference received, including interference that may cause undesired operation.

Appropriate testing has established that this device fulfills the requirements of a class A digital device in line with part 15 of the FCC regulations.

These requirements are designed to provide sufficient protection against interference when the device is being used in a business environment.

The device creates and uses high frequencies and can also radiate high frequencies, and if it is not installed and used in accordance with this operating manual, it can cause radio transmission interference. The use of this device in a living area can also cause interference, and in this case the user is obliged to cover the costs of removing the interference.

Recycling note

After usage, this device must be disposed of properly as electronic waste, in accordance with the current disposal regulations of your county, state, and country.

Relevant for use in Ex Zone 2 according to ATEX Directive 2014/34/EU

In Ex Zone 2, only the devices with a corresponding label may be operated.

The devices are to be installed and used according to the European directive 2014/34/EU. Details see the next page.

APPLICATIONS INVOLVING ZONE 2 HAZARDOUS AREAS

Important: see the Declaration of Conformity on page ii at the front of this manual for important additional information regarding the use of these products in countries governed by the ATEX Directive . The following information is in accordance with the Essential Health and Safety Requirements (Annex II) of the EU Directive 2014/34/EU [the ATEX Directive – safety of apparatus] and is provided for those locations where the ATEX Directive is applicable.

General

a) This equipment must only be installed, operated and maintained by competent personnel. Such personnel shall have undergone training, which included instruction on the various types of protection and installation practices, the relevant rules and regulations, and on the general principles of area classification. Appropriate refresher training shall be undertaken on a regular basis. [See clause 4.2 of EN 60079-17].

b) This equipment has been designed to provide protection against all the relevant additional hazards referred to in Annex II of the directive, such as those in clause 1.2.7.

c) The 9202-ETS and associated products mentioned in the DoC are certified as meeting the requirements of IEC/EN 60079-15 for Zone 2 applications and the European Community permits Category 3G equipment, such as these items from the 9202-ETS range, to be installed in Zone 2 flammable atmospheres provided it meets the requirements of the ATEX Directive.

Installation

a) The installation must comply with the appropriate European, national and local regulations, which may include reference to the code of practice IEC/EN 60079-14. In addition, particular industries or end users may have specific requirements relating to the safety of their installations and these requirements should also be met. For the majority of installations the Directive 1999/92/EC [the ATEX Directive- safety of installations] is also applicable.

b) This apparatus may be installed in a safe area and also in a Zone 2 location providing that the relevant installation conditions are met, as given in the Special Conditions here below:

Special conditions of Safe Use for Zone 2 applications

1) The modules shall be installed in a suitable enclosure in accordance with EN 60079-15, taking into account the environmental conditions under which the requirement will be used.

2) Provisions shall be made to prevent the rated voltage from being exceeded by transient disturbance of more than 119V.

3) When the temperature under rated conditions exceeds 70°C at the cable or conduit entry point, or 80°C at the branching point of the conductors, the temperature specification of the selected cable shall be in compliance with the actual measured temperature values.

Inspection and maintenance

a) Inspection and maintenance should be carried out in accordance with European, national and local regulations which may refer to the standard IEC/EN 60079-17. In addition specific industries or end users may have specific requirements which should also be met.

b) Access to the internal circuitry must not be made during operation.

Repair

This product cannot be repaired by the user and must be replaced with an equivalent certified product.

Marking

Each device is marked in compliance with the directive and relevant standards.

Equipment Name:	9202-ETS
ATEX Certificate No:	DEKRA 15ATEX0075X
Certification Code	II 3 G Ex nA IICT4 Gc

CONTROL DRAWING - MTL Tofino 9202-ETS
according to the European Directive 94/9/EC

Ordinary Location, Non-Hazardous Area, Nonexplosive Atmosphere

Atex Zone 2 Explosive Atmosphere

THE Fault Relays are tested as Sealed Device according to ATEX EN 60079-15. Switching current max. 1 A, (resistive load)
Switching voltage max. 60 VDC or 30 VAC, SELV

The USB connector is for temporary connection only. Do not use, connect, or disconnect unless area is known to be non-hazardous. Connection or disconnection in an explosive atmosphere could result in an explosion.

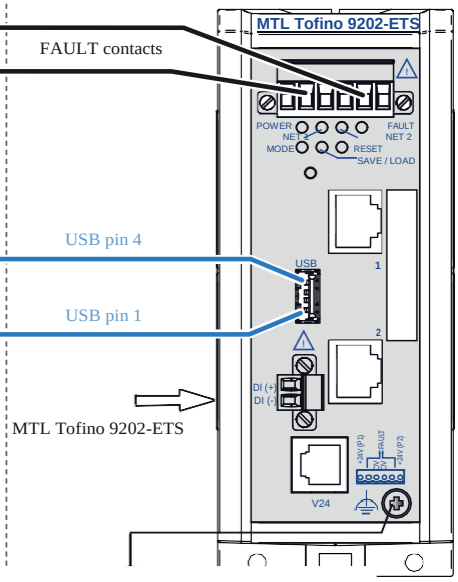

Temperature Code: T4
Ambient Temperature rating:
Ta: 0 °C to +60 °C for "S" types
Ta: −40 °C to +70 °C for "T" or "E" types
-refer to the type designation on the device
(item 18 of product code: "Temperature range")

The earth conductor must be at least of the same wire size (mm² or AWG) as the supply conductors.

CONTROL DRAWING - MTL Tofino 9202-ETS
according to the European Directive 94/9/EC

For Use in explosive atmospheres according to the European directive 94/9/EC:
Applied Standards: EN 60079-0, 2012 + A11 2013
EN 60079-15, 2010

The Use in Hazardous Locations with explosive atmospheres is only allowed for MTL 9202-ETS which is labeled accordingly - including " Ex II 3 G", "Ex nA IIC T4 Gc" "DEKRA 15ATEX0183X".

SPECIAL CONDITIONS FOR SAFE USE:

- **The modules shall be installed in a suitable enclosure providing a degree of protection of at least IP54 according to EN 60529, taking into account the enviromental conditions under which the equipment will be used.**
- **Provisions shall be made to prevent the rated voltage from being exceeded by transient disturbances of more than 119 V.**
- **When the temperature under rated conditions exceeds 70°C at the cable or conduit entry point, or 80°C at the branching point of the conductors, the temperature specification of the selected cable shall be in compliance with the actual measured temperature values.**

About this manual

This manual contains a device description, safety instructions, a description of the display, and the other information that you need to install the device.

The following manuals are available to registered users as PDF files from https://www.mtl-inst.com

- Hardware Installation Manual
- Tofino Configurator User Manual

The Tofino Configurator software coordinates configuration, management, and auditing of all Tofino Security Appliance devices from one workstation.

The software provides you with the following capabilities:

- Intuitive Windows-based graphical user interface
- Transfer of the configuration data from the application directly to the Tofino Security Appliance devices in the field
- Simple verification of the configuration of Tofino Security Appliance devices over the network
- Predefined templates for more than 125 IT and industrial communication protocols
- Asset templates for quick and efficient creation of your plant's assets
- Flexible security controls to tailor project access to meet your needs

GENERAL SAFETY INFORMATION

The following methods are used in this manual to alert the user to important information:-

WARNING	**WARNING !** Warnings are provided to ensure operator safety and MUST be followed.

CAUTION

Cautions are provided to prevent damage to the instrument.

NOTE

These are used to give general information to ensure correct operation.

1 DESCRIPTION

1.1 General description

The Tofino Industrial Security Solution is a distributed system that quickly and cost-effectively implements cyber security protection within your control network. This package for helping secure industrial control systems consists of three core components:

Tofino 9202-ETS Security Appliance

Industrially hardened devices that are installed between control system zones or in front of individual and/or clusters of controllers, computers, and other ICS/SCADA equipment.

Tofino Loadable Security Modules (LSMs)

A variety of software plug-ins that let you customize the security features of each Tofino module. These software modules help provide securityservices, such as Firewall and Event Logger.

Tofino Configurator

A Windows-based management system for the configuration of each Tofino module.

This manual focuses on the installation and setup of the first of these three components: the Tofino 9202-ETS Security Appliance.

You can use the Tofino devices everywhere that security-sensitive equipment or zones require a network connection. These devices can act as the link between control zones and networks that have different security needs and capabilities. For example, an Tofino can be placed between a primary control zone and a safety system zone, or between a PLC network and an HMI network. Tofino devices can also be used to help protect vulnerable devices, such as legacy controllers and computers running older operating systems, from cyber and network events.

For each Tofino security appliance, you can choose from a wide range of variants when ordering. These include:

- Loadable Security Modules (i.e., software modules)
- Types of network media (i.e., twisted pair versus fiber)
- Temperature range
- Certifications

The security functions are installed as Loadable Security Modules (LSMs).

These LSMs can be pre-installed at the factory, or purchased and added later. The following LSMs are currently available:

- Tofino Firewall LSM (included by default in all options)
- Tofino Event Logger LSM (included by default in all options)
- Tofino NetConnect LSM
- Tofino Modbus TCP Enforcer LSM
- Tofino OPC Classic Enforcer LSM
- Tofino EtherNet/IP Enforcer LSM

Additional LSMs are being developed continuously. If you need an LSM that is not in this list, please contact your sales representative.

You administer the Tofino devices using the Tofino Configurator software. This software allows you to configure all of your Tofino devices from one workstation. You can quickly create a model of your entire control system by scanning IP ranges to discover Tofino devices already installed on your network (this requires the NetConnect LSM). Visual editing tools help you create, edit, and test your Tofino configuration.

Tofino devices are designed for the special requirements of industrial automation. They meet the relevant industry standards, provide very high operational reliability, even under extreme conditions, and offer long-term reliability and flexibility.

This product provides you with a large range of functions and industrially focused features, which this and other manuals explain. These documents are available to registered users as PDF files.

1.2 Device Overview

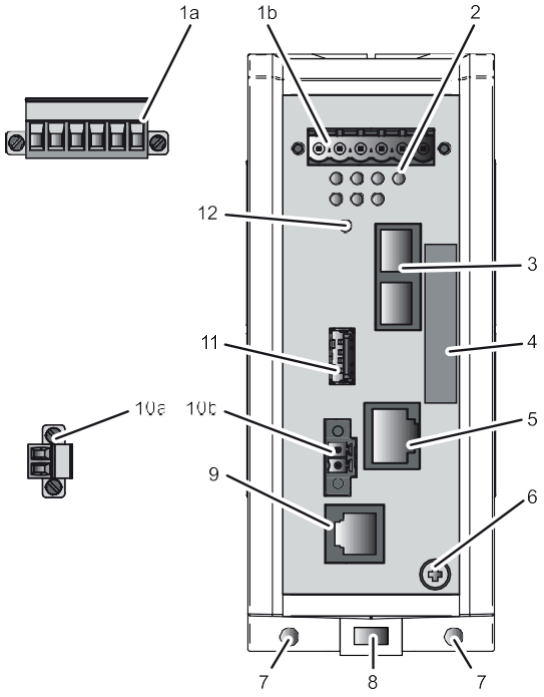

1a	6 pin, screwable terminal block for redundant supply voltage and signal contact	
1b	Terminal block connection	
2	LED display elements	
3	6 pin, Ethernet port 1	
	alternatively, depending on device variant	RJ45 socket for 10/100 Mbit/s twisted pair connections
		DSC multimode socket for 100 Mbit/s F/O port
4	Tofino ID	
5	Ethernet port 2 NET 2	
	alternatively, depending on device variant	RJ45 socket for 10/100 Mbit/s twisted pair connections
		DSC multimode socket for 100 Mbit/s F/O port
		DSC singlemode socket for 100 Mbit/s F/O port
6	Grounding screw	
7	Hole for mounting using a wall mounting plate	
8	Locking gate for removing the device	
9	V.24 interface The V.24 interface is not active in this version of the firmware.	
10a	2 pin, screwable terminal block for digital input	
10b	Terminal block connection	
11	USB interface	
12	Save/Load/Reset button	

Table 1 - Front view (using the example MTL Tofino 9202-ETS

1.3 Power Supply

A 6-pin, screwable terminal block is available for the redundant supply to the device.

For further information see “Supply voltage” on page 2.

1.4 Ethernet ports

1 .4 .1 10/100 Mbit/s twisted pair port

The 10/100 Mbit/s twisted pair port offers you the ability to connect network components according to the IEEE 802.3 10BASE-T/100BASE-TX standard.

This port supports:

- Autocrossing (if autonegotiation is activated)
- Autonegotiation
- Autopolarity
- 10 Mbit/s half-duplex mode, 10 Mbit/s full duplex mode
- 100 Mbit/s half-duplex mode, 100 Mbit/s full duplex mode

Delivery state: autonegotiation active

The socket housing is electrically connected with the front panel.
The pin assignment corresponds to MDI-X.

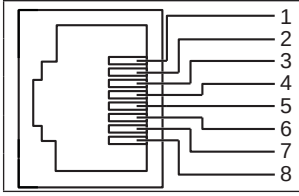

Pin	Function	
1	RD+	Recieve path
2	RD-	Recieve path
3	TD+	Recieve path
6	TD-	Recieve path
4, 5, 7, 8	—	Recieve path

Table 2 - Pin assignment of the 10/100 Mbit/ twisted pair port, RJ-45 socket, MDI-X mode

1 .4 .2 100 Mbit/s F/O port

The 100 Mbit/s F/O port offers you the ability to connect network components according to the IEEE 802.3 100BASE-FX standard.

This port supports:

- Full or half duplex mode

Default setting: Full duplex

1.5 Display elements

After the supply voltage is set up, the software starts and initializes itself. Afterwards, the device performs a self-test.

1 .5 .1 Device state

These LEDs provide information about conditions which affect the operation of the whole device.

LED	Display	Colour	Activity	Meaning
POWER	Supply voltage	—	None	Supply voltage is too low
		Yellow	Lights up	Supply voltage 1 or 2 is on
		Green	Lights up	Supply voltages 1 and 2 are on
NET 1 and NET 2	Link status	—	None	Device detects an invalid or missing link
		Green	Lights up	Device detects a valid link
			Flashes 3 times a period	Port is switched off
		Yellow	Flashing	Device is transmitting and/or receiving data
FAULT	System and USB save/load errors	Red	None	The signal contact is closed- it is not reporting any detected errors.
			Very short flashing in cycles of 0.5 s	A detected USB load or save error occurred. See table 8 on page 18.
MODE	Network mode	Green	None	The device is in Unconfigured mode.
			Lights up	The device is in operational mode.
			Long flashing	The device is in test mode.
SAVE/ LOAD	Preparation Saving process	Green	Lights up (5 s)	The saving of the device diagnostic or log files to the USB storage device is about to begin.
	Preparation Loading process	Yellow	Lights up (5 s)	The load of the configuration files from the USB storage device is about to begin.
RESET	Preparation Reset process	Yellow	Lights up (5 s)	The reset of the device to the factory defaults is about to begin.
MODE RESET	Execution Saving process	Green	Flashing alternately in left to right sequence	The device saves the diagnostic files or log files on the USB device.
	Execution Loading process	Yellow	Flashing alternately in right to left sequence	The device loads the configuration files from the USB device.
MODE RESET	Execution Reset process		Flashing simultaneously	The reset of the device to the factory defaults is in progress.

1.6 Controls

The Tofino SA has a Save/Load/Reset (SLR) button.

Save/Load/Reset button SLR

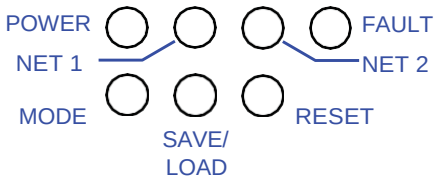

The SLR button has the following functions:

- Saving diagnostic files and log files on the USB storage device
- Loading configuration files from the USB storage device
- Factory resetting the device
- To perform the functions, press the SLR button. The number of button presses controls which function is carried out. Check your selection by looking at the LEDs.

Button presses	Chosen function	LED behavior
1	Saving diagnostic files and log files on the USB storage device	The SAVE/LOAD LED will illuminate in green. After a few seconds the MODE, SAVE/LOAD, and RESET LEDs will flash in green in a left to right sequence to indicate the USB Save is in progress.
2	Loading configuration files from the USB storage device	The SAVE/LOAD LED will illuminate in yellow. After a few seconds the MODE, SAVE/LOAD, and RESET LEDs will flash in yellow in a right to left sequence to indicate the USB Load is in progress.
3	Factory resetting the device	The following LEDs flash simultaneously: MODE, SAVE/LOAD, RESET, FAULT.
4	Canceling prior button presses	—

1.7 Management interfaces

1.7.1 V.24 interface

The V.24 interface is not active in this version of the firmware.

1.7.2 USB interface

173 This interface offers you the ability to connect a USB storage device. This storage device is used for saving/loading the configuration and diagnostic functions, and for upgrading the software.

The USB interface has the following properties:

- Supports the USB master mode
- Supports USB 2.0 formatted as FAT or FAT32 (data rate max. 12 MBit/s)
- Connectors: type A
- Supplies current of max. 500 mA
- Voltage not potential-separated

Figure	Pin	Operation
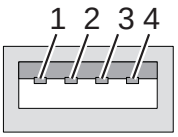	1	VCC (Bus)
	2	- Data
	3	+ Data
	4	Ground (GND)

Table 5 - Pin assignment of the USB interface

1.8 Input/output interfaces

1 .8 .1 Signal contact (Digital output)

The signal contact is a potential-free relay contact.

The device allows you to perform remote diagnosis via the signal contact. In the process, the device signals events such as a line interruption. When an event occurs, the device opens the relay contact and interrupts the circuit.

For further information see “Signal contact (optional)” on page 21.

1 .8 .2 Digital input

For further information see “Wiring the digital input (optional)” on page 21.

2 INSTALLATION

Before installing and starting up the device, read the safety instructions.

See “Safety instructions” on page 1.

2.1 Overview

The devices have been developed for practical application in a harsh industrial environment.

On delivery, the device is ready for operation.

Perform the following steps to install and configure the device:

- Checking the package contents
- Installing and grounding the device
- Connecting the power supply and signal lines
- Wiring the digital input (optional)
- Operating the device
- Connecting data cables

2.2 Checking the package contents

- Check whether the package includes all items named in the section “Scope of delivery” on page 32.
- Check the individual parts for transport damage.

2.3 Installing and grounding the device

WARNING	**FIRE HAZARD** Install the device in a fire protected enclosure according to EN 60950-1. **Failure to follow these instructions can result in death, serious injury, or equipment damage .**

2 .3 .1 Installing the device onto the DIN rail

- Verify that there is at least 4 in (10 cm) of space above and below the device.
- Verify that there is at least 0.8 in (2 cm) of space on the right and left sides of the device.

To mount the device onto a horizontally mounted 35 mm DIN rail according to DIN EN 60715, proceed as follows:

- Slide the upper snap-in guide of the device into the DIN rail.
- Pull down the locking gate using a screwdriver and press the lower part,of the device against the DIN rail.
- Snap in the device by releasing the locking gate.

2 .3 .2 Mounting on a vertical flat surface

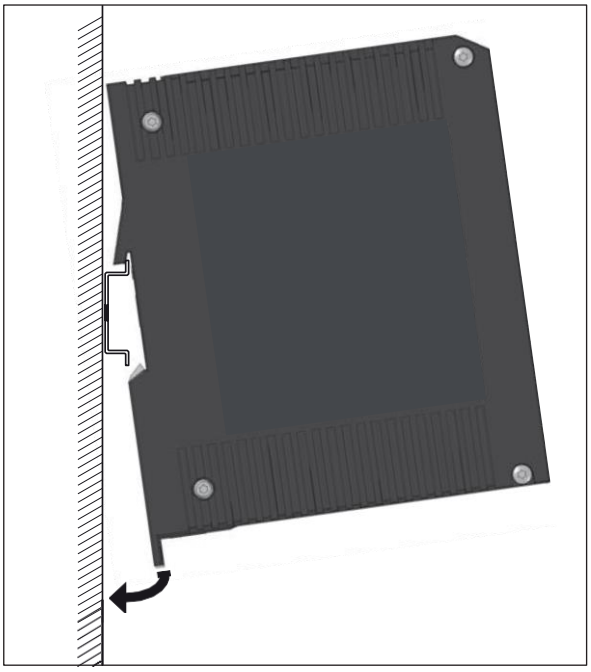

You have the option of attaching the device to a vertical flat surface. This requires a wall mounting plate, which you purchase as a separate accessory.

See “Accessories” on page 32.

The wall mounting plate comes without mounting hardware.

The wall mounting plate includes instructions that take you through the mounting procedure.

- Follow the mounting instructions enclosed with the accessory.

2 .3 .3 Grounding the device

WARNING	**ELECTRIC SHOCK** Ground the device before connecting any other cables. **Failure to follow these instructions can result in death, serious injury, or equipment damage .**

The device has a functional ground connection.

The device is grounded via the separate ground screw.

- Ground the device via the ground screw.

2.4 Connecting the terminal blocks

WARNING	**ELECTRIC SHOCK** Never insert pointed objects (narrow screwdrivers, wires, etc.) into the device or into the connection terminals for electric conductors. Do not touch the connection terminals. Start connecting the electrical wires only if all the above safety requirements are fulfilled. See “Supply voltage” on page 2. See “Input/output interfaces” on page 3. **Failure to follow these instructions can result in death, serious injury, or equipment damage .**

2 .4 .1 Connecting the power supply and signal lines

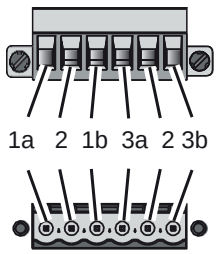

1	Power supply connection 1
	1a 24 V
	1b 0 V
2	Connection for the signal contact
3	Power supply connection 2
	3a 0 V
	3b 24 V

Table 6 - Pin assignment: 6 pin, screwable terminal block (on the top), connection to the device (at the bottom)

Supply voltage

The supply voltage can be connected redundantly. Both inputs are uncoupled.There is no distributed load. With redundant supply, the power supply unit with the higher output voltage supplies the device on its own.

The supply voltage is electrically isolated from the housing.

Type of the voltages that can be connected	Specification of the supply voltage	Pin assignment on the device
DC voltage	Rated voltage range DC 12 V ... 48 V Voltage range DC incl. maximum tolerances 9.6 V ... 60 V	24 V Plus terminal of the supply voltage
		0 V Minus terminal of the supply voltage
AC voltage	Nominal voltage AC 24 V Voltage range AC incl. maximum tolerances 18 V ... 30 V	24 V Outer conductor
		0 V Neutral conductor

Table 7 - Pin assignment: 2 pin, screwable terminal block (on the left), connection to the device (to the right)

- Remove the power connector from the device.
- Connect the wires according to the pin assignment on the device with the clamps.
- Ground the device via the ground screw.

Signal contact (optional)

- Connect the wires according to the pin assignment on the device with the clamps.
- Fasten the wires connected by tightening the terminal screws.

2 .4 .2 Wiring the digital input (optional)

	Pin	Signal, terminal	Function
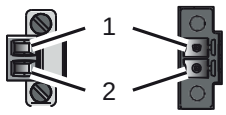	1	DI (+)	Signal input
	2	DI (-)	Reference potential

Table 8 - Pin assignment: 2 pin, screwable terminal block (on the left), connection to the device (to the right)

- Remove the power connector from the device.
- Connect the wires according to the pin assignment on the device with the clamps.
- Fasten the wires connected by tightening the terminal screws.

2.5 Operating the device

WARNING	**ELECTRIC SHOCK** Connect only a supply voltage that corresponds to the type plate of your device. **Failure to follow these instructions can result in death, serious injury, or equipment damage .**

Note: The torque for tightening the working voltage terminal block on the device is 4.5 lb-in (0.51 Nm).

The torque for tightening the terminal block on the digital input of the device is 3 lb-in (0.34 Nm).

- Mount the terminal block for the supply voltage and the signal contact using screws.
- Enable the supply voltage.

2.6 Connecting data cables

Note: In general, adhere to the following recommendations for data cable connections in environments with high electrical interference levels:

- Keep the length of the data cables as short as possible.
- Use optical data cables for the data transmission between the buildings.
- When using copper cables, provide a sufficient gap between the power supply cables and the data cables. Ideally, install the cables in separate cable channels.
- Use shielded cables.

Note: Verify that you connect only optical ports with the same optical transmission properties with each other.

For further information see “10/100 Mbit/s twisted pair port” on page 14.

For further information see “100 Mbit/s F/O port” on page 14.

- Connect the device via the NET 2 port to the internal network or the local computer that you want to help protect.
- Connect the device via the NET 1 port to the external network, such as the Internet. This network is used to set up the connections to the external device or external network.

3 CONFIGURATION

3.1 Making basic settings

You configure the device using the Tofino Configurator software supplied at no charge with every device purchased.

Using this software you can configure the Tofino SA in 2 ways:

- use an encrypted USB storage device
- discover and configure Tofino SA devices over the network (requires the NetConnect LSM to be loaded in the device)

Regardless of the configuration method used, an IP address is not required for setup. However, when using the network method, both network interfaces must be connected and the computer running the Tofino Configurator software must be able to communicate to an IP device on the opposite interface.

For example, if the Tofino Configurator computer is on NET 1 then another device should be connected in some way on the NET 2 port and the two devices should be able to ping each other.

You will find further information on discovering, configuring, and managing the MTL Tofino 9202-ETS non Security Appliance in the Tofino Configurator User Manual.

- Default settings
- Optical 100 Mbit/s ports: 100 Mbit/s full duplex
  Twisted pair ports: autonegotiation
- Device mode:
  Unconfigured mode and passing all traffic

3 .1 .1 USB interface

The USB port has an interface for the local connection of a USB storage device. It is used for saving/loading the configuration, transferring event logs, and updating the firmware and licenses.

USB Save

Perform a USB Save on the Tofino SA to save event log and diagnostic information from the hardware to a USB storage device.

- Power on the Tofino SA for at least one minute.
- Insert the USB storage device into the USB port.
- Press the Save/Load/Reset button once.
  The SAVE/LOAD LED will illuminate in green. After a few seconds the MODE, SAVE/LOAD, and RESET LEDs will flash in green in a left to right sequence to indicate the USB Save is in progress.
- When the flashing sequence stops, remove the USB storage device. If the save was successful the LEDs will revert to the state they were in prior to the save action.

USB Load

Perform a USB Load to transfer configuration files and firmware updates stored on a USB storage device to the Tofino SA.

- Power on the Tofino SA for at least one minute.
- Insert the USB storage device containing the prepared files into the USB port.
- Press the Save/Load/Reset button twice.
  The SAVE/LOAD LED will illuminate in yellow. After a few seconds the MODE, SAVE/LOAD, and RESET LEDs will flash in yellow in a right to left sequence to indicate the USB Load is in progress.
- When the flashing sequence stops, remove the USB storage device. If the load was successful the FAULT LED will be off.

3.2 Fault LED

The FAULT LED flashes during the USB save and load sequences to convey specific messages. See the following table to interpret this activity.

No . of flashes	During save sequence	During load sequence
1	—	The USB port is disabled. In the Tofino Configurator, check the Communications setting on the Tofino SA General page. The method of communication should be “USB Only” or “Both USB and Network”.
2	No USB memory device is connected to the USB connection, or the file system of the memory device is not formatted as FAT or FAT32.	No USB memory device is connected to the USB connection, or the file system of the memory device is not formatted as FAT or FAT32.
3	The device was unable to create any diagnostic files. Please contact technical support.	The files on the USB memory device are invalid.
4	The device was unable to encrypt the diagnostic files. Please contact technical support.	The device was unable to decrypt the configuration files. The files were possibly damaged during the copying operation. Repeat the copying operation. If the condition persists, contact technical support.
5	The device was unable to copy the diagnostic files to the USB memory device. It is possible that the memory device is full.	The device was unable to load the files. It is possible that the files were damaged during the copying operation. Repeat the copying operation. If the condition persists, contact technical support.
6	The device was unable to deactivate the USB connection. Please contact technical support.	The device was unable to deactivate the USB connection. Please contact technical support.
7	The file system of the device does not have enough memory capacity to save the files temporarily before they are copied to the USB memory device. Please contact technical support.	—

Table 9 - FAULT LED diagnostics for USB Save and Load

3.3 Operating Modes

This device works in one of 3 operating modes:

- Unconfigured mode
- Test mode
- Operational mode

Mode	Description	LED	Colour	Activity
Unconfigured mode	This is the mode of the device on delivery. All security functionality is turned off and the device is listening for initialization commands. The device has been preconfigured so that all Ethernet traffic in both directions is permitted. This is so that the installation of the device will not interrupt or impact process operations.	MODE	—	None
Test Mode	In Test mode the device does not impact network traffic in any way, but generates alarm messages for any traffic that would have been blocked if the device was in Operational mode. This is used to test that the device is correctly configured before it is used to filter control system traffic.	MODE	Green	Flashing
Operational Mode	In Operational mode the device is fully operational, processes all traffic, and will block any messages not specifically permitted by firewall rules.	MODE	Green	Solid

Table 10 - Operating modes

4 MAINTENANCE AND SERVICE

- When designing this device, Tofino Security largely avoided using highwear parts. The parts subject to wear and tear are dimensioned to last longer than the lifetime of the product when it is operated normally.
  Operate this device according to the specifications.
  See “Technical data” on page 29.
- Relays are subject to natural wear. This wear depends on the frequency of the switching operations. Check the resistance of the closed relay contacts and the switching function depending on the frequency of the switching operations.
- Tofino Security is continually working on improving and developing its software. Check regularly whether there is an updated version of the software that provides you with additional benefits. You find software information and downloads on the Tofino Security product pages (www.tofinosecurity. com/support).
- Depending on the degree of pollution in the operating environment, check at regular intervals that the ventilation slots in the device are not obstructed.

5 DISASSEMBLY

WARNING	**ELECTRIC SHOCK** Disconnect the grounding only after disconnecting all other cables. **Failure to follow these instructions can result in death, serious injury, or equipment damage .**

- Disconnect the data cables.
- Disable the supply voltage.
- Disconnect the terminal blocks.
- Disconnect the grounding.

To remove the device from the DIN rail, you proceed as follows:

- Insert a screwdriver horizontally below the housing into the locking gate.
- Pull the locking gate down without tilting the screwdriver.
- Lift the bottom of the device away from the DIN rail.

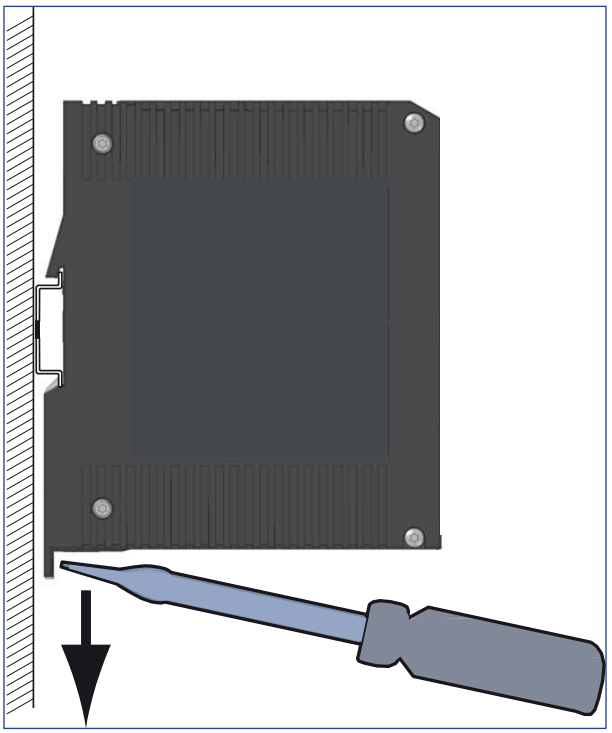

6 TECHNICAL DATA

6.1 General technical data

Dimensions W × H × D	See “Dimension drawings” on page 30.	
Weight	660 g	
Power supply	• 2 voltage inputs for redundant power supply • Safety extra-low voltage (SELV), redundant inputs disconnected	
	Nominal voltage AC	24 V, Class 2
	Voltage range AC incl. maximum tolerances	18 V ... 30V, Class 2
	Rated voltage range DC	12 V ... 48 V, Class 2
	Voltage range DC incl. maximum tolerances	9.6 V ... 60V, Class 2
	Connection type	6 pin, screwable terminal block for redundant supply voltage and signal contact
	Power failure bypass	> 10 ms at 20.4 V DC or AC > 2 ms at 10.2 V DC
	Overload current protection at input	Non-replaceable fuse
	Back-up fuse for each voltage input when supply is via 2 inputs	Nominal value at 48 V 1 A
		Nominal value at 24 V 1 A ... 2 A
		Nominal value at 12 V 1 A ... 2.5 A
		Characteristic: slow blow
	Back-up fuse when using 1 voltage input [a]	Nominal value at 48 V 1 A ... 2 A
		Nominal value at 24 V 1 A ... 4 A
		Nominal value at 12 V 1 A ... 5 A
		Characteristic: slow blow
	Peak inrush current	< 14 A
Climatic conditions during operation	Ambient air temperature[b]	Devices with operating temperature characteristic value S (standard): +32 °F ... +140 °F (0 °C ... +60 °C)
	Maximum inner temperature of device (guideline)	Devices with operating temperature characteristic value S (standard): 176 °F (80 °C)
		Devices with operating temperature characteristic value E and T (extended): 194 °F (90 °C)
	Humidity	minimum 795 hPa (+9842 ft; +2000 m) maximum 1060 hPa (−1312 ft; −400 m)
	Air pressure	Peak inrush current
Climatic conditions during storage	Ambient air temperature[c]	−40 ºF ... +185 ºF (−40 ºC ... +85 ºC)
	Humidity	10%...90% (non-condensing)
	Air pressure	minimum 700 hPa (+9842 ft; +3000 m) maximum 1060 hPa (−1312 ft; −400 m)
Signal contact FAULT	Switching current	max. 1 A, SELV
	Switching voltage	max. 60 V DC, SELV
		Relevant for North America: max. 30 V DC, Class 2, resistive load
Pollution degree		2
Protection classes	Laser protection	Class 1 in compliance with IEC 60825-1
	Degree of protection	IP20

a . As an alternative to the back-up fuse is possible: Voltage supply according to Class 2 or EN 60950-1 Limited Power Source

b . Temperature of the ambient air at a distance of 2 inches (5 cm) from the device

c . Temperature of the ambient air at a distance of 2 inches (5 cm) from the device

6.2 Digital Input

Maximum permitted input voltage range	−32 V DC … +32 V DC
Nominal input voltage	+24 V DC
Input voltage, low level, status “0”	-0.3 V DC … +5.0 V DC
Input voltage, high level, status “1”	+11 V DC … +30 V DC
Maximum input current at 24 V input voltage	15 mA
Input characteristic according to IEC 61131-2 (currentconsuming)	Type 3

6.3 Dimension drawings

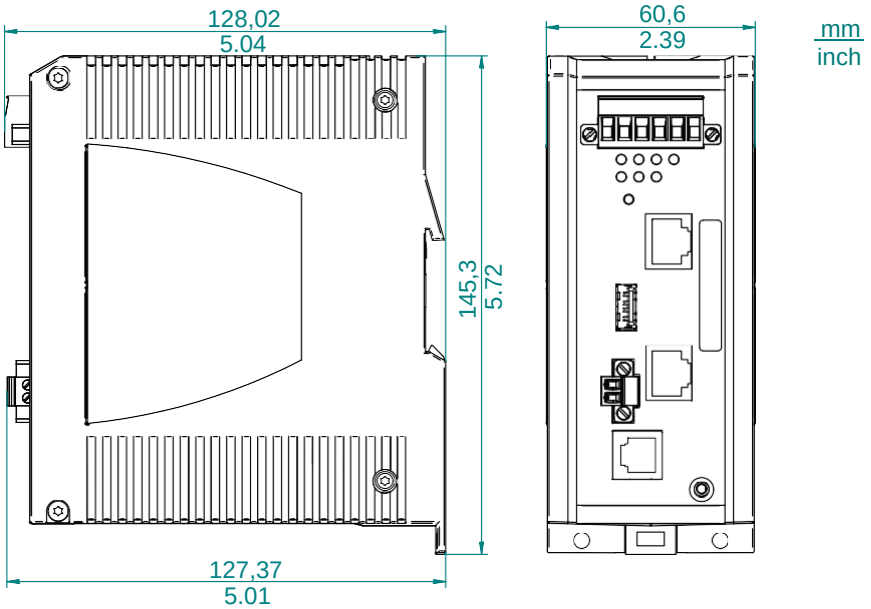

Figure 1 - Dimensions

6.4 EMC and immunity

Note: You will find detailed information on the certificates and declarations applying to your device in a separate overview.

Stability		Standard applications	Navy applications	Railway applications	Substation applications
IEC 60068-2-6, test Fc	Vibration	5 Hz ... 8.4 Hz with 0.14 in. (3.5 mm) amplitude	2 Hz ... 13.2 Hz with 0.04 in. (1 mm) amplitude	—	2 Hz ... 13.2 Hz with 0.04 in. (1 mm) amplitude
		—	—	—	—
		8.4 Hz ... 150 Hz with 1 g	13.2 Hz ... 100 Hz with 0.7 g	—	9 Hz ... 200 Hz with 1 g
		—	—	—	—
		—	—	—	200 Hz ... 500 Hz with 1.5 g
IEC 60068-2-27, test Ea	Shock	15 g at 11 ms	—	—	0.53 oz (10 g) at 11 ms

EMC interference emission		Standard applications	Navy applications	Railway applications (trackside)	Substation applications
Radiated emission					
EN 55022		Class A	Class A	Class A	Class A
FCC 47 CFR Part 15		Class A	Class A	Class A	Class A
EN 61000-6-4		Fulfilled	Fulfilled	Fulfilled	Fulfilled
Conducted emission					
EN 55022	AC and DC supply connections	Class A	Class A	Class A	Class A
FCC 47 CFR Part 15	AC and DC supply connections	Class A	Class A	Class A	Class A
EN 61000-6-4	AC and DC supply connections	Fulfilled	Fulfilled	Fulfilled	Fulfilled
EN 55022	Telecommunication connections	Class A	Class A	Class A	Class A
EN 61000-6-4	Telecommunication connections	Fulfilled	Fulfilled	Fulfilled	Fulfilled

EMC interference immunity		Standard applications	Navy applications	Railway applications (trackside)	Substation applications
Electrostatic discharge					
EN 61000-4-2 IEEE C37.90.3	Contact discharge	± 4 kV	± 6 kV	± 6 kV	± 8 kV
EN 61000-4-2 IEEE C37.90.3	Air discharge	± 8 kV	± 8 kV	± 8 kV	± 15 kV
Electromagnetic field					
EN 61000-4-3	80 MHz ... 3000 MHz	10 V/m	10 V/m	20 V/m	10 V/m
IEEE 1613	80 MHz ... 1000 MHz	—	—	—	35 V/m
Fast transients (burst)					
EN 61000-4-5	line/ground	± 2 kV	± 2 kV	± 2 kV	± 2 kV
IEEE 1613	line/ground	—	—	—	± 5 kV
EN 61000-4-5	line/line	± 1 kV	± 1 kV	± 1 kV	± 1 kV
Voltage surges - data line					
EN 61000-4-5	line/ground	± 1 kV	± 1 kV	± 2 kV	± 4 kV
Conducted disturbances					
EN 61000-4-6	150 kHz ... 80 MHz	10 V	10 V	10 V	10 V
Damped oscillation - AC/DC supply connection					
EN 61000-4-12 IEEE C37.90.1	line/ground	—	—	—	± 2.5 kV
EN 61000-4-12 IEEE C37.90.1	line/line	—	—	—	± 1 kV
Damped oscillation - data line					
EN 61000-4-12 IEEE C37.90.1	line/ground	—	—	—	± 2.5 kV
EN 61000-4-12	line/line	—	—	—	± 1 kV
Pulse magnetic fields					
EN 61000-4-12		—	—	300 A/m	300 A/m

6.5 Network range

Ports	Wave length	Fiber	System attenuation	Example for F/O linelength [a]	Fiber attenuation	BLP/ dispersion
MM	1300 nm	50/125 µm	0-8 dB	0-5 km	1.0 dB/km	800 MHz*km
MM	1300 nm	62.5/125 µm	0-11 dB	0-4 km	1.0 dB/km	500 MHz*km
SM	1300 nm	9/125 µm	0-16 dB	0-30 km	0.4 dB/km	3.5 ps/(nm*km)

Table 16 - F/O port 100BASE-FX

a . including 3 dB system reserve when compliance with the fiber data is observed
MM = Multimode
SM = Singlemode

10/100/1000 Mbit/s twisted pair port	
Length of a twisted pair segment	max. 100 m (for cat5e cable)

6.6 Power consumption/power output

Device name	Maximum power consumption	Power output
MTLTofino 9202-ETS	5 W	17 Btu (IT)/h

6.7 Scope of delivery

Number	Article
1x	Device
1x	6 pin, screwable terminal block for redundant supply voltage and signal contact
1x	2 pin, screwable terminal block for digital input
1x	Installation user manual

6.8 Accessories

Other accessories	Order number
MTL Tofino Modbus TCP Enforcer LSM	9522-MBT
MTL Tofino OPC Enforcer LSM	9522-OPC
MTL Tofino Ethernet IP Enforcer LSM	9522-EIP
MTL Tofino DNP3 Enforcer LSM	9522-DNP3
MTL Tofino IEC 104 Enforcer LSM	9522-IEC104
MTL Tofino IEC 61850 GOOSE Enforcer LSM	9522-GOOSE

6.9 Underlying technical standards

Name	
ISA 12.12.01, CSA C22.2 No. 213	Nonincendive Electrical Equipment for Use in Class I, Division 2 Hazardous Locations
EN 50121-4	Railway applications – EMC – Emission and immunity of the signalling and telecommunications apparatus (Rail Trackside)
EN 55022	Information technology equipment – Radio disturbance characteristics – Limits and methods of measurement
EN 60079-0	Explosive atmospheres – Part 0: Equipment – General requirements
IEC/EN 60079-15	Explosive atmospheres – Part 15: Equipment protection by type of protection “n”
EN 60950-1	Information technology equipment – Safety – Part 1: General requirements
EN 61000-6-2	Electromagnetic compatibility (EMC) – Part 6-2: Generic standards – Immunity for industrial environments
EN 61000-6-4	Electromagnetic compatibility (EMC) – Part 6-4: Generic standards – Emission standard for industrial environments
EN 61131-2	Programmable controllers – Part 2: Equipment requirements and tests
FCC 47 CFR Part 15	Code of Federal Regulations
IEC 60825-1	Safety of Laser Products
IEC/EN 61850-3	Communication networks and systems in substations – Part 3: General requirements
IEEE 1613	IEEE Standard Environmental and Testing Requirements for Communication Networking Devices in Electric Power Substations
ISA 12.12.01	United States Standard for Safety for Nonincendive Electrical Equipment for Use in Class I and II, Division 2 and Class III, Divisions 1 and 2 Hazardous (Classified) Locations
UL 508	Safety for Industrial Control Equipment

Table 21 - List of technical and industry standards

The device generally fulfills the technical and industry standards named in their current versions. The device has an approval based on a specific standard or de facto standard only if the approval indicator appears on the housing.

THIS PAGE IS LEFT INTENTIONALLY BLANK

THIS PAGE IS LEFT INTENTIONALLY BLANK

CROUSE-HINDS SERIES

AUSTRALIA
MTL Instruments Pty Ltd,
10 Kent Road, Mascot, New South Wales, 2020, Australia

Tel: +61 1300 308 374 Fax: +61 1300 308 463
E-mail: mtlsalesanz@eaton.com

BeNeLux
MTL Instruments BV
Ambacht 6, 5301 KW Zaltbommel
The Netherlands

Tel: +31 (0)418 570290 Fax: +31 (0)418 541044
E-mail: mtl.benelux@eaton.com

CHINA
Cooper Electric (Shanghai) Co. Ltd
955 Shengli Road, Heqing Industrial Park
Pudong New Area, Shanghai 201201

Tel: +86 21 2899 3817 Fax: +86 21 2899 3992
E-mail: mtl-cn@eaton.com

FRANCE
MTL Instruments sarl,
7 rue des Rosiéristes, 69410 Champagne au Mont d'Or
France

Tel: +33 (0)4 37 46 16 53 Fax: +33 (0)4 37 46 17 20
E-mail: mtlfrance@eaton.com

GERMANY
MTL Instruments GmbH,
Heinrich-Hertz-Str. 12, 50170 Kerpen, Germany

Tel: +49 (0)22 73 98 12- 0 Fax: +49 (0)22 73 98 12- 2 00
E-mail: csckerpen@eaton.com

INDIA
MTL India,
No.36, Nehru Street, Off Old Mahabalipuram Road
Sholinganallur, Chennai- 600 119, India

Tel: +91 (0) 44 24501660 /24501857 Fax: +91 (0) 44 24501463
E-mail: mtlindiasales@eaton.com

ITALY
MTL Italia srl,
Via San Bovio, 3, 20090 Segrate, Milano, Italy

Tel: +39 02 959501 Fax: +39 02 95950759
E-mail: chmninfo@eaton.com

JAPAN
Cooper Crouse-Hinds Japan KK,
MT Building 3F, 2-7-5 Shiba Daimon, Minato-ku,
Tokyo, Japan 105-0012

Tel: +81 (0)3 6430 3128 Fax: +81 (0)3 6430 3129
E-mail: mtl-jp@eaton.com

NORWAY
Norex AS
Fekjan 7c, Postboks 147,
N-1378 Nesbru, Norway

Tel: +47 66 77 43 80 Fax: +47 66 84 55 33
E-mail: info@norex.no

RUSSIA
Cooper Industries Russia LLC
Elektrozavodskaya Str 33
Building 4
Moscow 107076, Russia

Tel: +7 (495) 981 3770 Fax: +7 (495) 981 3771
E-mail: mtlrussia@eaton.com

SINGAPORE
Cooper Crouse-Hinds Pte Ltd
No 2 Serangoon North Avenue 5, #06-01 Fu Yu
Building Singapore 554911

Tel: +65 6 645 9864 / 5 Fax: +65 6 487 7997
E-mail: sales.mtlsing@eaton.com

SOUTH KOREA
Cooper Crouse-Hinds Korea
7F. Parkland Building 237-11 Nonhyun-dong Gangnam-gu, Seoul 135-546, South Korea.

Tel: +82 6380 4805 Fax: +82 6380 4839
E-mail: mtl-korea@eaton.com

UNITED ARAB EMIRATES
Cooper Industries/Eaton Corporation
Office 205/206, 2nd Floor SJ Towers, off. Old Airport Road,
Abu Dhabi, United Arab Emirates

Tel: +971 2 44 66 840 Fax: +971 2 44 66 841
E-mail: mtlgulf@eaton.com

UNITED KINGDOM
Eaton Electric Ltd,
Great Marlings, Butterfield, Luton
Beds LU2 8DL

Tel: +44 (0)1582 723633 Fax: +44 (0)1582 422283
E-mail: mtlenquiry@eaton.com

AMERICAS
Cooper Crouse-Hinds MTL Inc.
3413 N. Sam Houston Parkway W.
Suite 200, Houston TX 77086, USA

Tel: +1 281-571-8065 Fax: +1 281-571-8069
E-mail: mtl-us-info@eaton.com

Powering Business Worldwide

Eaton Electric Limited,
Great Marlings, Butterfield, Luton
Beds, LU2 8DL, UK.
Tel: + 44 (0)1582 723633 Fax: + 44 (0)1582 422283
E-mail:
mtlenquiry@eaton.com
www.mtl-inst.com

© 2018 Eaton
All Rights Reserved

Publication No. INM MTL Tofino 9202-ETS Rev 6 150318
March 2018

EUROPE (EMEA):
+44 (0)1582 723633
mtlenquiry@eaton.com

THE AMERICAS:
+1 800 835 7075
mtl-us-info@eaton.com

ASIA-PACIFIC:
+65 6 645 9888
sales.mtlsing@eaton.com

The given data is only intended as a product description and should not be regarded as a legal warranty of properties or guarantee. In the interest of further technical developments, we reserve the right to make design changes.