Instruction manual
MTL intrinsic safety solutions

November 2025
INM MTL 9492-PS-PLUS Rev 5

CROUSE-HINDS SERIES

MTL 9492-PS-PLUS

(This manual also covers the MTL9491-PS-PLUS)

Intrinsically safe power supply

DECLARATION OF CONFORMITY

A printed version of the Declaration of Conformity has been provided separately within the original shipment of goods. However, you can find a copy of the latest version at http://www.mtl-inst.com/certificates

CONTENTS

DECLARATION OF CONFORMITY . . . . . **II**

GENERAL SAFETY INFORMATION . . . . . **IV**

1 FEATURES **1**

2 DESCRIPTION **1/2**

3 DIN-RAIL INSTALLATION METHOD **3**

3.1 Protection of equipment **3**

3.2 DIN rail mounting **3**

3.2.1 Mounting power supplies on DIN rail 4

3.2.2 Wiring up power supplies. 4

3.2.3 Ambient temperature considerations 5

3.3 Power bus - Installation and use **5**

3.4 Earth rail and tagging accessories **6**

3.4.1 Parts list 6

3.5 Assembly **8**

3.5.1 Fitting earth rails 8

3.5.2 Fitting tagging strips 8

3.5.3 Completed assemblies 9

4 BACKPLANE MOUNTING VARIANT **10**

4.1 Accessories **10**

4.2 Protection of equipment **10**

4.3 Backplane mounting **10**

4.3.1 Surface mounting – with kit SMS01 12

4.3.2 T- or G-section DIN-rail mounting –with kit DMK01 12

4.4 Backplanes – identification and tagging **12**

4.4.1 Backplane identification labels. 12

4.4.2 Tagging strip mounting kit (TSK08) 12

4.5 Backplanes - earth rails **14**

4.5.1 Earth rail kit (ERK08) 14

4.6 Backplanes – power supply connections **14**

4.6.1 Single backplane 14

4.6.2 Interconnection of power supplies for multiple backplanes 14

4.7 Fitting MTL 9492-PS-PLUS modules to backplane **14**

4.7.1 Installation - Figure 4.15. 14

4.7.2 Module removal - Figure 4.16 14

5 ENVIRONMENTAL **16**

6 WASTE REMOVAL INFORMATION **16**

7 APPROVALS **16**

8 ATEX, UKEX, IECEX & MET CERTIFICATION INFORMATION **17/25**

GENERAL SAFETY INFORMATION

Safety instructions for installation and operating personnel

The operating instructions provided here contain **essential safety instructions** for installation personnel and those engaged in the operation, maintenance and servicing of the equipment.

WARNING	**WARNING !** A 'WARNING' marked in this way is provided for operator and plant safety and MUST be followed.

CAUTION !

A Caution is provided to prevent damage to the instrument.

NOTE

These are used to guide the user in the operation of the instrument.

Before commencing installation or commissioning:

- Read and understand the contents of this manual
- Ensure installation and operating personnel have received adequate training for this task
- Ensure that any operating instructions are fully understood by the personnel responsible.
- Observe national and local installation and mounting regulations (e.g. IEC 60079-14).

WARNING	**WARNING !** These assemblies may not be used in explosion-hazard area applications if they have been used previously in general electrical installations.

WARNING	**WARNING !** The responsibility for planning, installation, commissioning, operation and maintenance, particularly with respect to applications in explosion-hazard areas, lies with the plant operator.

During operation:

- Make the relevant instructions available at all times to the operating personnel.
- Observe safety instructions.
- Observe national safety and accident prevention regulations.
- Operate the equipment within its published specification.
- Servicing, maintenance work or repairs not described in this manual must not be performed without prior agreement with the manufacturer.
- Any damage to this equipment may render its explosion protection null and void.
- No changes to any of the components that might impair their explosion protection are permitted.

If any information provided here is not clear:

Contact **Eaton's MTL product line** or an authorised distributor or sales office.

NOTE

Improper installation and operation of the enclosure can result in the invalidation of the guarantee.

MTL 9492-PS-PLUS IS Power Supply

1 FEATURES

- Isolated power supply
- Zone 2 mountable
- DIN-rail or backplane mounting
- ATEX / IECEx / UKEX / North America ($MET_{C/US}$) approvals
- 480mA @10.0V DC- Ex ia IIB output
- 550mA @11.9V DC- Ex ib IIB output
- Power over Ethernet option (PoEx)*
- Multiple outputs achieved by ganging MTL 9492-PS-PLUS modules using 24V DC power distribution backplane

Note: This manual also covers the 9491-PS-PLUS model. Please refer to the electrical parameters table in the Control Drawing at the end of this document for any differences between these models.

**Note – PoEx is a simple adaptation of the IEEE 802.3af Power over Ethernet (PoE) standard to bring the benefits to the 9400 Range of Hazardous Area devices. This allows two spare pairs in the existing Cat5e cable to distribute the power supplied to a 9466 Ethernet Switch (Power Sourcing Equipment – PSE) to each of the devices connected to its five ports (PD – Powered Device). This adaptation is necessary due to restrictions for Hazardous Area use. It is not implied that the device conforms to the 802.3af (PoE) standard.*

2 DESCRIPTION

The MTL 9492-PS-PLUS Power Supply is the recommended method for supplying the MTL 9470-ET series of intrinsically safe Ethernet modules and is based on an isolating power supply. It takes a 24V DC safe area / Zone 2 supply and produces an intrinsically safe, 12V DC nominal output capable of powering any one of the MTL 94xx Series Ethernet modules mounted in a Zone 1 hazardous area. The MTL 9492-PS-PLUS may be mounted in a safe area, Zone 2 hazardous area.

The output can be from either the Ex ia IIB or Ex ib IIB output connectors depending upon application. The 'ib' IIB output providing a higher useable output power where the Gas Group and Zone allows. See Figures 2.1 and 2.2 for connection details.

Figure 2.1
Zone 0
Ex ia IIB
application

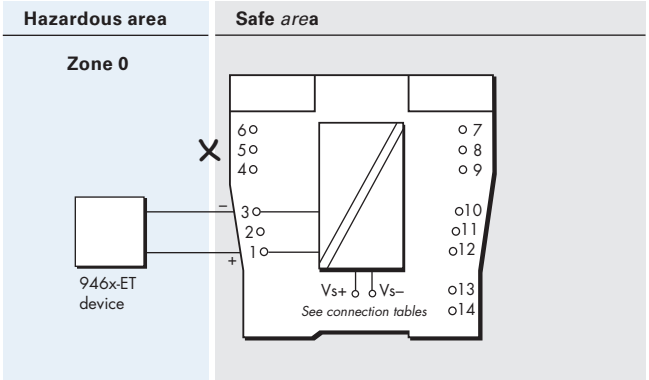

Figure 2.2
Zone 1
Ex ib IIB
application

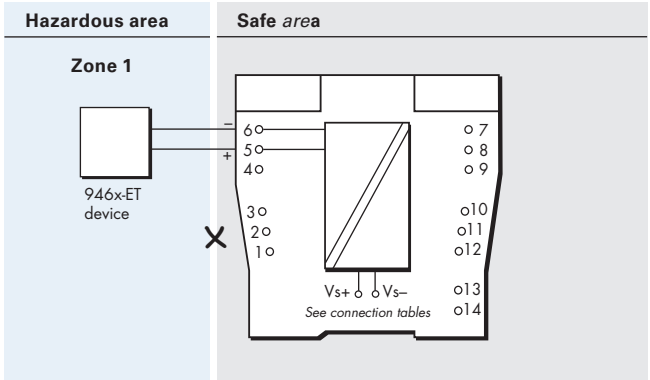

Table 2.1
DIN-rail
mounting
connections

Terminal	Function
1	Ex ia IIB output +ve
2	n.c.
3	Ex ia IIB output –ve
4	n.c.
5	Ex ib IIB Output +ve
6	Ex ib IIB Output –ve
13	Supply –ve (Vs–)
14	Supply +ve (Vs+)

Table 2.2
Backplane
mounting
connnections

Terminal	Function
1	Ex ia IIB output +ve
2	n.c.
3	Ex ia IIB output –ve
4	n.c.
5	Ex ib IIB Output +ve
6	Ex ib IIB Output –ve
7, 8 & 9	Supply –ve (Vs–)
10, 11 & 12	Supply +ve (Vs+)

Each MTL 9492-PS-PLUS can power a single MTL 947x-ET Ethernet module.

It is not permitted to connect to both ia and ib outputs on the same MTL 9492-PS-PLUS module.

If multiple outputs are required for several Ethernet modules, there is a power distribution backplane available to simplify the 24VDC input connection to the modules, or alternatively a number of them can be DIN-rail mounted with a convenient "Powerbus" input.

The MTL 9492-PS-PLUS module has LED power indication for both input and output (see Figure 2.3) along with internal current limiting and electronic auto-reset circuit breaker action to protect the module in the event of its output being short circuited or overloaded. This also minimises the power dissipation during the fault to a negligible level, thus improving reliability.

Figure 2.3
MTL 9492-PS-PLUS
top label and
LED indicators

3 DIN-RAIL INSTALLATION METHOD

This section deals with mounting the individual MTL 9492-PS-PLUS power supplies on DIN rail, for backplane mounting see **Section 4**.

WARNING	**WARNING !** If this module is to be connected to intrinsically safe apparatus, it must be installed, operated and maintained only be trained competent personnel and in accordance with all appropriate international, national and local standard codes of practice and site regulation and in accordance with the instructions contained here.

See also Sections 7, 8 and 9 for approvals and important conditions of safe use.

3.1 Protection of equipment

When the power supply is mounted in a safe area ensure that the local environment is clean and free of dirt and dust and note the ambient temperature considerations given in Section 5.

WARNING	**WARNING !** When mounted in a Zone 2 hazardous area the module ***must*** be protected by a suitably certified enclosure.

3.2 DIN rail mounting

Mount the MTL 9492-PS-PLUS power supplies on low-profile (7mm) or high-profile (15mm) type T35 (top-hat) DIN-rail to EN50022, BS5584, DIN46277; this is available from MTL, in 1 metre lengths (THR2 DIN rail). It is recommended that, in normal practice, the DIN rail is earthed to ensure personnel safety in the event of mains being put accidentally on the rail.

See Figure 3.1 for power supply dimensions.

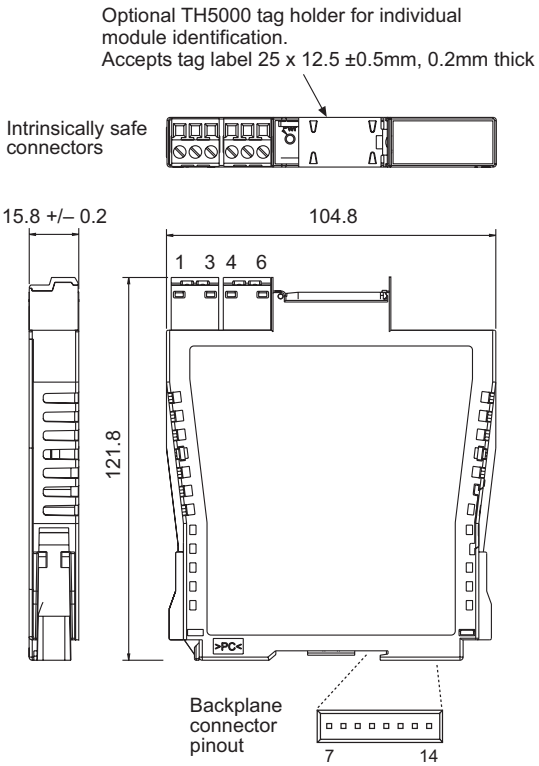

Figure 3.1 MTL 9492-PS-PLUS package dimensions & connections

3.2.1 Mounting power supplies on DIN rail

Clip power supplies onto type T35 DIN rail as shown in Figure 3.2, with the blue signal plugs facing towards the hazardous-area wiring. To remove an power supply from the rail, insert a screwdriver blade into the clip as shown and lever the clip gently outwards; pivot the power suppy off the rail. Allow a maximum mounting pitch of 16.2mm for each unit.

Figure 3.2 DIN rail mounting and removal of module

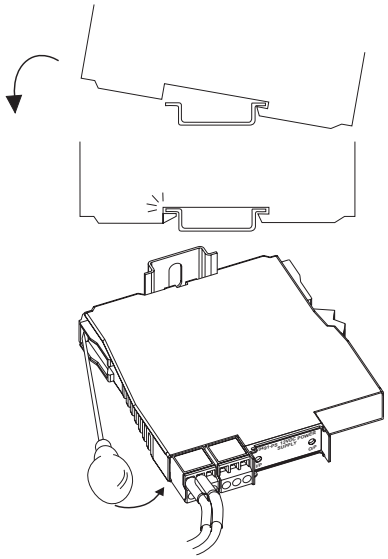

3.2.2 Wiring up power supplies

Depending on the installation, it may be easier to wire up power supplies with power plugs either in place or removed. Either way, allow sufficient free cable to permit plugs to be removed easily for future maintenance and/or replacement purposes.

Power conductors

The removable power plugs are fitted with screw clamp terminals. Note that the conductors should be between 14 and 24 AWG (1.6 and 0.5mm dia) in size. Plugs, located on top of the modules, are mechanically keyed to fit in only one position. The input power plug slots into the socket at terminals 13 and 14 on the safe-area side of each module.

Figure 3.2 Removable power plugs

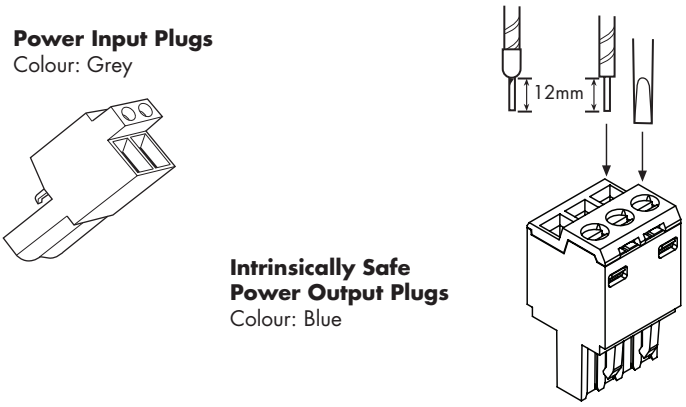

Making connections

a) Trim back the insulation of conductors by 12mm.

b) Check the terminal assignments shown in section 6 or on the side label of the unit.

c) Insert conductors according to the terminal assignments and tighten screws.

If the wires are to be fitted with crimp ferrules, 10–12mm is the recommended length of the metal tube. If longer ones are used, they must be trimmed to 12mm before fitting.

Finishing

Wire up individual power supplies in accordance with wiring schedules. Daisy-chain power supply connections between individual power plugs or use the power bus (see section 4.1).

Segregate hazardous- and safe-area wiring into separate trunking or looms wherever possible to avoid errors and maintain a tidy installation.

3.2.3 Ambient temperature considerations

Ambient temperature limits for unenclosed power supplies are from-40°C to +70°C with units close-packed.

3.3 Power bus - Installation and use

A PB-8T power bus kit enables power supply terminals (13 and 14) of up to 8 installed MTL 9492-PS-PLUS power supplies to be linked to a standard 24V power supply. The bus consists of a chain of power plugs and different lengths are available to suit various numbers of modules as follows.

1. Check to make sure the bus length is correct for the number of modules involved.
2. If the number of modules is less than the maximum number the chain will support, cut off the surplus power plugs at the tail end of the chain - leaving sufficient cable to attach further power plugs if it becomes necessary later.
3. Insert power plugs into the power terminals on the safe- area side of each module in sequence.
4. Connect the power supply source to the tail end of the chain (using the insulation displacement connectors [Scotchloks] provided if required).

Notes:

1. To avoid excessive voltage drop or over-current, DO NOT connect power buses in series.

2. Surplus sections can be used (and, if required) connected together provided the cut ends are safely terminated and/or connected together. Use single ferrules with a crimp tool or insulation displacement connectors (Scotchloks). Suitable ferrules and connectors are provided with the kits.

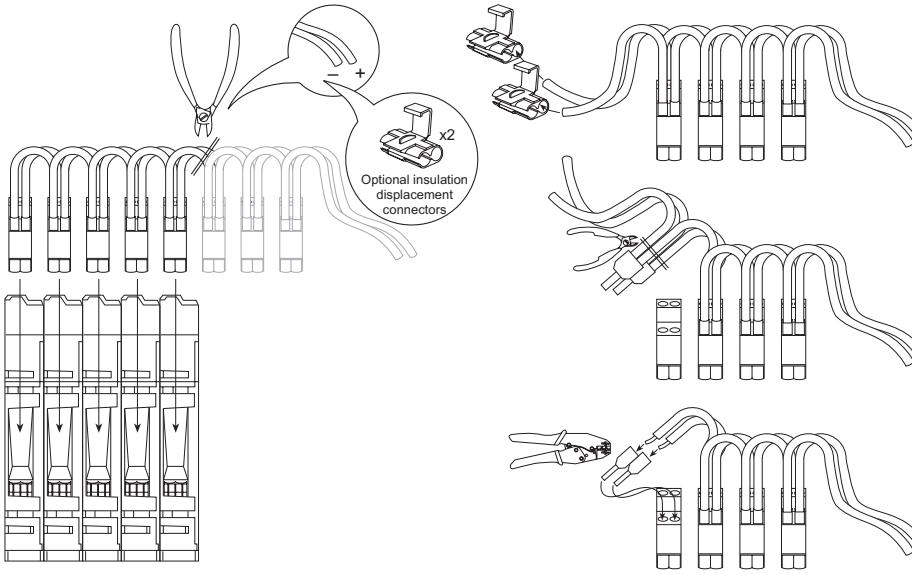

Figure 3.3 Power bus wiring, joining and terminating

3.4 Earth rail and tagging accessories

This section explains how to specify and assemble earth rail and tagging strip accessories for the MTL 9492-PS-PLUS power supplies. The accessories consist of mounting brackets, earth rails, tagging strips and associated parts. They provide facilities for earthing, terminating cable screens and tagging (identifying) the positions of individual units.

3.4.1 Parts list

IMB57 Insulating mounting block (Figures 3.4, 3.5 & 3.6)
One required at each end of a tagging strip/earth rail. Suitable for low-profile (7.5mm) and high-profile (15mm) symmetrical DIN rail.

ERB57S Earth-rail bracket, straight (figure 3.10)
Nickel-plated bus bar; supplied with two push fasteners, one earth-rail clamp (14mm, 35mm^2) and one earth cable clamp (10mm, 16mm^2).

Note: ERB57S is the preferred choice of earth-rail bracket. It is usually fitted in the upper slot on insulating mounting block IMB57.

Where the earth rail is required to be positioned at a lower height and to allow access to the IMB57 mounting screws, the straight earth-rail bracket ERB57S can be inserted in the lower slot, but only after insulating mounting blocks IMB57 are clamped to the DIN rail. This may not be possible if, for example, trunking is fitted. In this case, fit offset earth-rail bracket ERB570 (see figure 3.4 & 3.10) in the upper slot: the mounting blocks can then be fitted in a restricted space with this bracket already fitted.

ERB570 Earth-rail bracket, offset (figure 3.10)
Nickel-plated bus bar; supplied with two push fasteners, one earth-rail clamp (14mm, 35mm2) and one earth cable clamp (10mm, 16mm2).

ERL7 Earth rail, 1m length (figure 3.10)
Nickel-plated bus bar; may be cut to length.

TAG57 Tagging strip, 1m length (figure 3.10)
Cut to size. Supplied with tagging strip label.

TGL57 Tagging strip labels, set of 10 x 0.5m
Spares replacement, for use with TAG57 tagging strip.

MS010 DIN rail module spacer, 10mm, pack of 5 (figure 3.8)
Grey spacer; one required between each MTL 9492-PS-PLUS and any adjacent module on a DIN rail, to provide 10mm air-circulation space between modules.

ETM7 Earth terminal, bag of 50 (figure 3.9)
For terminating cable screens and 0V returns on the ERL7 earth rail. For cables ≤ 4mm^2.

TH5000 Tag holder
Spares replacement.

Connectors
Spares replacement: HAZ1-3, HAZ4-6, HAZ-CJC, PWR5000, SAF7-9, SAF10-12 (SAF1-3 and SAF4-6 grey connectors, also available for use in safe-area applications).

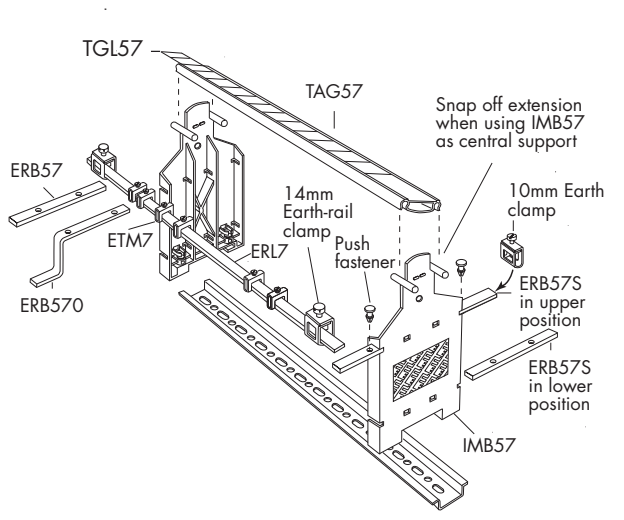

Figure 3.4: Assembly drawing showing part numbers

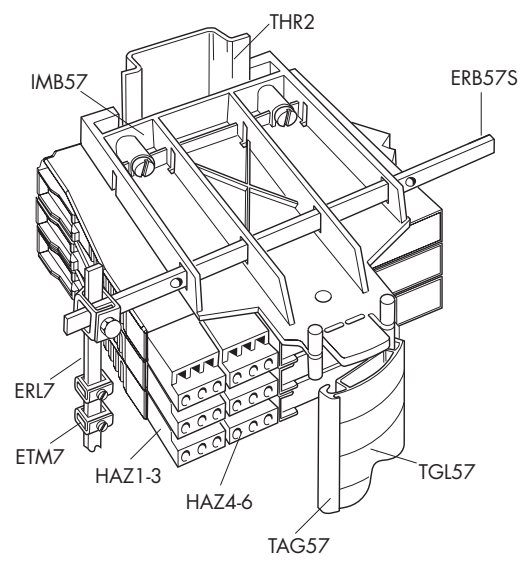

Figure 3.5: Mounting details

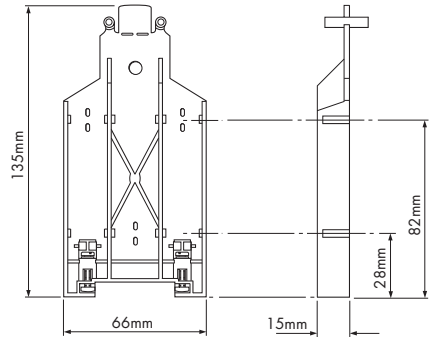

Figure 3.6: IMB57 Insulating mounting block

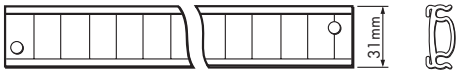

Figure 3.7: TAG57 Tagging strip,1m length

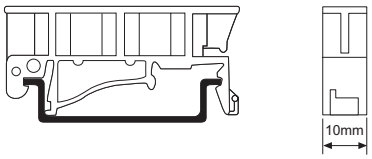

Figure 3.8: MS010 DIN rail module spacers

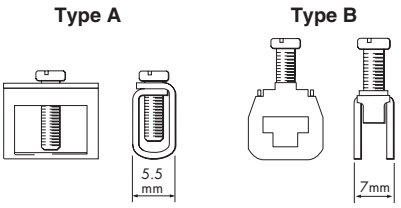

Figure 3.9: ETM7 Earth terminals

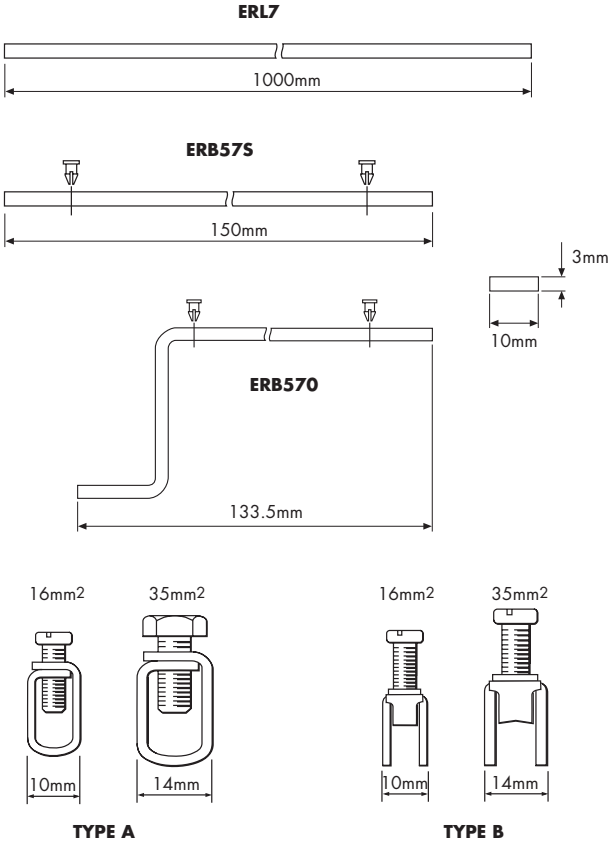

Figure 3.10: Earth rails and clamps

3.5 Assembly

3.5.1 Fitting earth rails

a) In upper position

Before fitting insulating mounting blocks IMB57, check that the swing nuts in the base of each unit are turned back into the moulding. Locate the mounting blocks on the DIN rail in the chosen position and tighten the screws (see figure 3.11). Check that the swing nuts rotate correctly to locate underneath the flanges of the DIN rail.

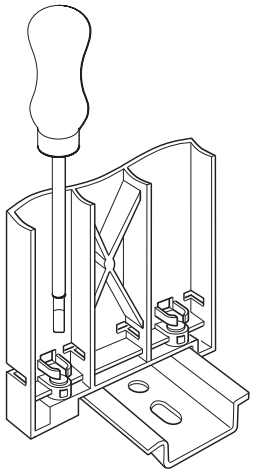

Figure 3.11: Fitting IMB57

Slide a straight earth-rail bracket ERB57S into the upper slot in each mounting block. Push two plastic push fasteners into each bracket to locate the brackets in the mounting blocks.

Cut earth rail ERL7 to the length needed. Slide the required number of ETM7 earth terminals (5mm or 7mm wide) onto the rail. Clamp each end of the earth rail to earth-rail brackets ERB57S using the terminal clamps (14mm, 35mm^2) supplied. Fit an earth clamp (10mm, 16mm^2) to the free end of each earth-rail bracket.

Note: For lengths of earth-rail greater than 500mm, provide additional support by installing a third IMB57 mounting block and earth-rail bracket, mid-way between the end mounting blocks. Snap out the perforated extension between the lugs on this mounting block if a continuous tagging strip is to be fitted (see figure 3.4).

b) In lower position, where at least 150mm clearance exists on one side, measured from the edge of the mounting block.

As for a), but slide earth-rail brackets ERB57S into the lower slots in each mounting block.

c) In lower position, where there is insufficient clearance to fit earth-rail brackets ERB57S.

As for a), but slide offset earth-rail brackets ERB57O into the upper slot in each mounting block before assembling the mounting blocks to the DIN rail. ERB57S brackets cannot be used because they obscure the mounting blocks' fixing screws.

3.5.2 Fitting tagging strips

Assemble mounting blocks IMB57 to the DIN rail as above. Cut TAG57 tagging strip and label to the length needed, and insert label so that the appropriate side is visible. Clip the strip onto the lugs on the mounting blocks. Hinge up the strip to provide access to the tops of the power supplies.

Note: If necessary, provide additional support for long lengths of tagging strip by installing an extra IMB57 mounting block mid-way between the end mounting blocks. Snap out the perforated extension between the lugs on this mounting block.

3.5.3 Completed assemblies

Figure 3.12 illustrates a complete assembly of MTL 9492-PS-PLUS power supplies using the accessories mentioned above.

The broken-line boxes either side of the assembly represent cable trunking, and the accompanying dimensions represent the minimum spacing between trunking and assemblies.

Figure 3.12: MTL 9492-PS-PLUS power supplies-complete assembly

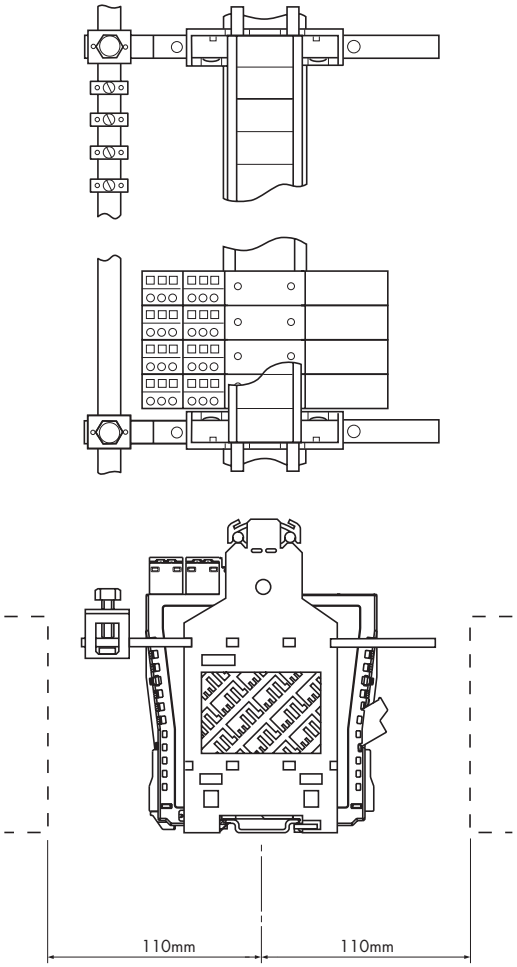

4 BACKPLANE MOUNTING VARIANT

PLEASE NOTE: The backplane mounting variant is only available by prior special arrangement. Please contact MTL product line to discuss.

The alternative to DIN-rail mounting is to use a standard MTL backplane that accommodates 8 modules with 24V dc dual redundant power supplies. In applications where a number of backplanes are installed, the power supply can be interconnected. Optional earth-rail and tagging-strip kits are available for the backplanes.

WARNING !

If this module is to be connected to intrinsically safe apparatus, it must be installed, operated and maintained only be trained competent personnel and in accordance with all appropriate international, national and local standard codes of practice and site regulation and in accordance with the instructions contained here.

4.1 Accessories

Accessories are available that enable the user to mount the backplanes. These include surface-mounting kits, T-section and G-section DIN-rail mounting kits and end stops.

MOUNTING KITS			ACCESSORIES		
Surface	**DIN-rail (T or G)**	**19-inch rack**	**Earth-rail kit**	**Tagging strip kit**	**Spare fuse pack**
SMS01	DMK01	–	ERK08–	TSK08	FUS08

4.2 Protection of equipment

When the power supply is mounted in a safe area ensure that the local environment is clean and free of dirt and dust and note the ambient temperature considerations given in Section 5.

WARNING !

When mounted in a Zone 2 hazardous area the module *must* be protected by a suitably certified enclosure. See the *Special Conditions for Safe Use* provided in the ATEX Safety Instructions at the end of this manual for further details of operation in Zone 2 hazardous areas.

4.3 Backplane mounting

See the table for details of the kits and accessories applicable to the mounting methods and Figure 4.1 for dimensions and mounting centres.

Note: Before mounting a MTL 9492-PS-PLUS on a backplane two minor modifications must be made.

1. Remove the DIN-rail mounting clip by compressing the small spring inside the clip with a screwdriver and then removing it; the clip may then be removed easily from its mounting.
2. Remove the power supply plug located in the side of the unit, then fit the small plastic plate supplied to cover the hole in the module case.

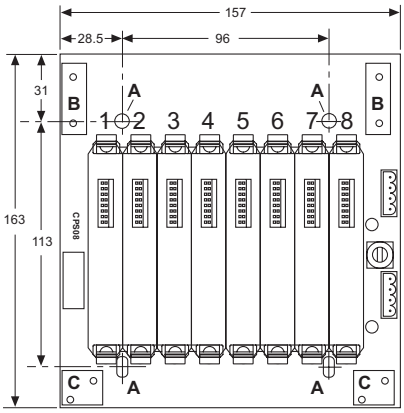

Figure 4.1: CPS08 backplane for MTL 9492-PS-PLUS modules

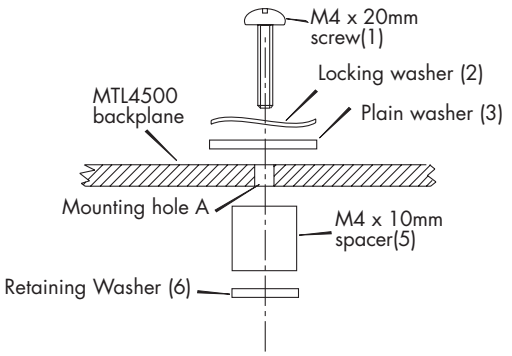

Figure 4.2: Surface mounting procedure

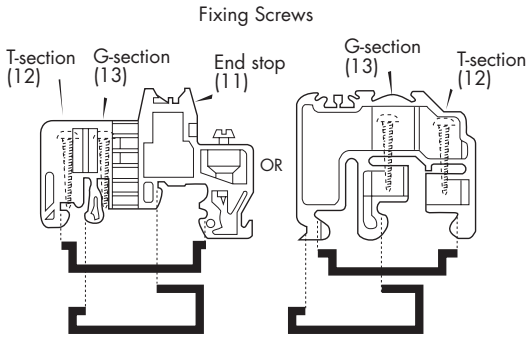

Figure 4.5: Mounting end stops onto DIN rail

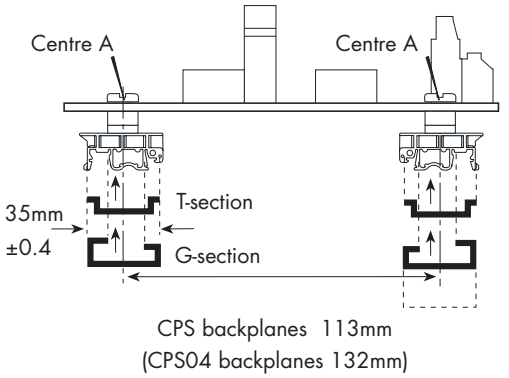

Figure 4.3: T-section and G-section DIN-rail attachment

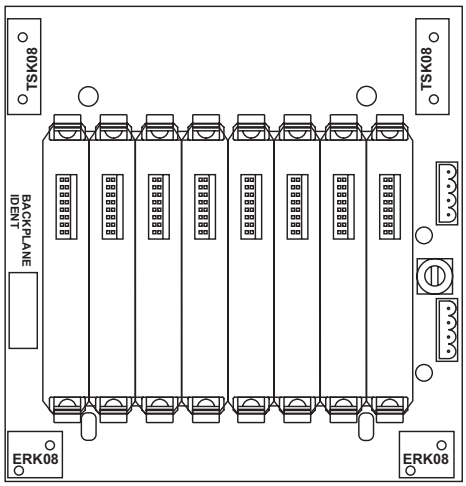

Figure 4.6: Backplane layout showing locations for labels and attachment of accessories

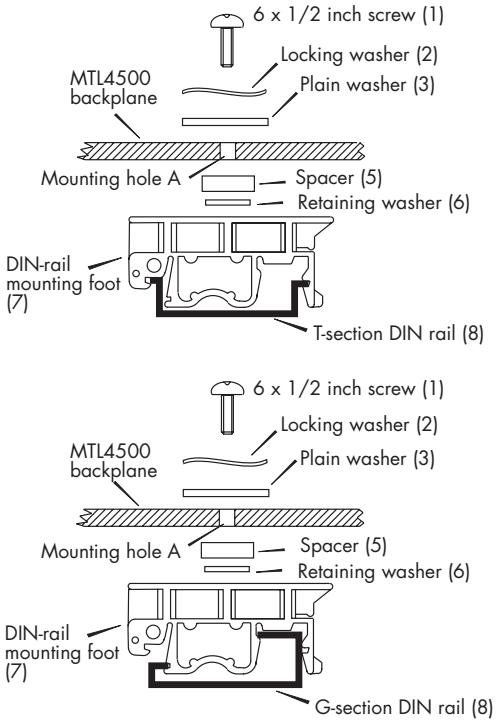

Figure 4.4: Mounting a backplane onto DIN rail

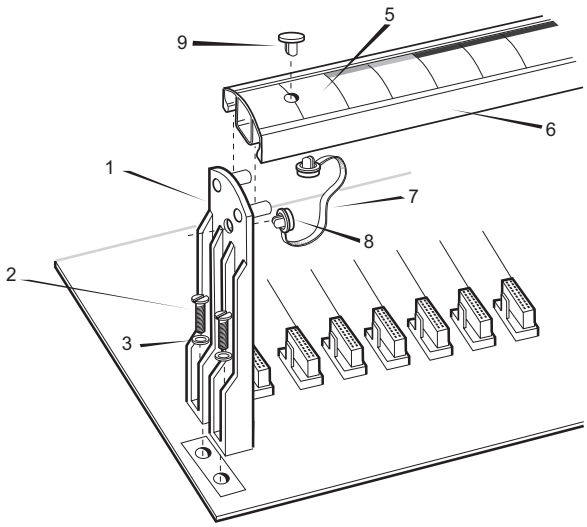

Figure 4.7: Mounting a tagging-strip post

4.3.1 Surface mounting – with kit SMS01

See Figures 4.1 and 4.2.

a) Select four M4 x 20mm screws.

b) Prepare holes in the surface at centres A, tapping these if retaining nuts are not required (Figure 4.1).

c) Place a locking washer (2) and a plain washer (3) over each M4 x 20mm screw (1) (Figure 4.2).

d) Insert the screws through the backplane at each mounting centre A (Figures 4.1 and 4.2).

e) Fit M4 x 10mm spacers (5), retaining them with retaining washers (6) (Figure 4.2).

f) Attach the assemblies into the pre-drilled surface holes at centres A, retaining the screws with a suitable nut if the holes are not tapped.

4.3.2 T- or G-section DIN-rail mounting –with kit DMK01

See Figures 4.1, 4.3, 4.4 and 4.5.

a) Select two pieces of T- or G-section DIN-rail of the appropriate length.

b) Mount the two lengths of DIN-rail side-by-side at centres A, 113mm apart (Figure 4.1).

c) Clip four mounting feet (7) to the DIN rail (8) at centres A (Figure 4.4).

d) Select the appropriate number of No. 6 x 1/2-inch screws.

e) Place a locking washer (2) and a plain washer (3) onto each No. 6 x 1/2-inch screw (1) (Figure 4.4).

f) Insert the assemblies through the mounting holes A on the backplane (Figures 4.1 and 4.4).

g) Fit spacers (5), retaining them with the washers (6) (Figure 4.4).

h) Locate the assemblies over the mounting feet and attach the screws (1) to the feet (Figure 4.4).

i) For backplanes that are mounted in a vertical orientation, attach one end stop (11) to the lower end of each DIN-rail supporting a column of backplanes by clipping the stops into place and tightening the appropriate screw [(12) for T-section and (13) for G-section DIN-rails] (Figure 4.5).

j) Additional end stops should be attached between backplanes to increase the stability of tall columns of backplanes.

4.4 Backplanes – identification and tagging

Marked areas are provided for identifying backplanes. Mounting holes for earth-rail and tagging-strip attachments are similarly marked.

4.4.1 Backplane identification labels

a) Attach a suitably marked label to the area marked BACKPLANE IDENT. to identify an individual backplane. See Figure 4.6.

4.4.2 Tagging strip mounting kit (TSK08)

See Figures 4.1, 4.9, 4.10 and 4.11.

a) Locate the tagging strip mounting posts (1) at backplane centres B (Figure 4.1).

b) Attach each mounting post (1) to the backplane with two M3 x 12mm mounting screws (2) and washers (3) (Figure 4.7).

c) Slide the tag label (5) into the plastic holder (6) and retain with a plastic rivet (9) (Figure 4.7).

d) Attach the plastic retaining tie (7) with two plastic rivets (8) (Figure 4.7).

e) Clip the tag strip holder (6) onto the mounting posts (1) by pushing it downwards (Figure 4.8).

f) If required, swivel the tagging strip vertically (Figure 4.9)

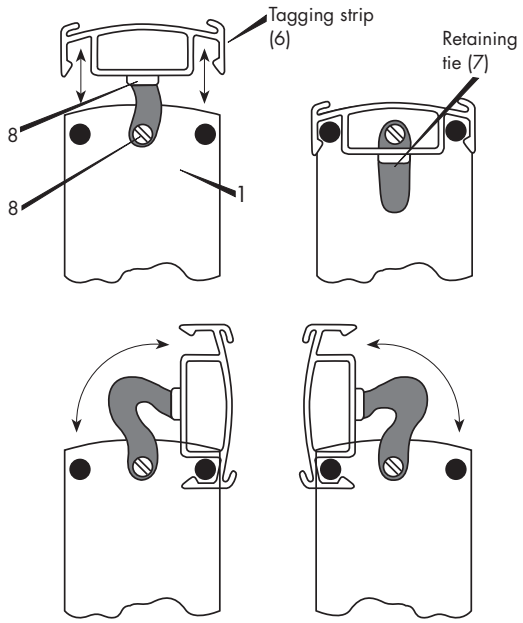

Figure 4.8: Attaching and swivelling a tagging-strip

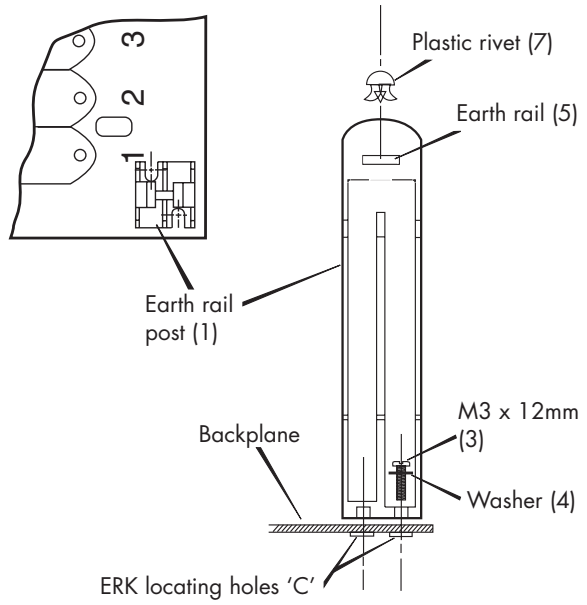

Figure 4.9: Attaching an earth-rail post

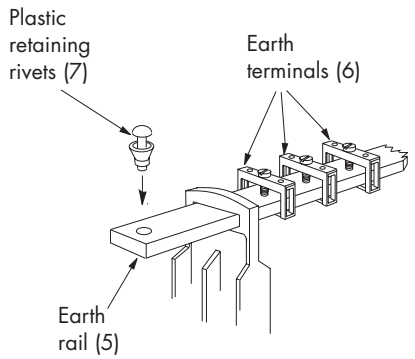

Figure 4.10: Attaching earth rail terminals and rivets

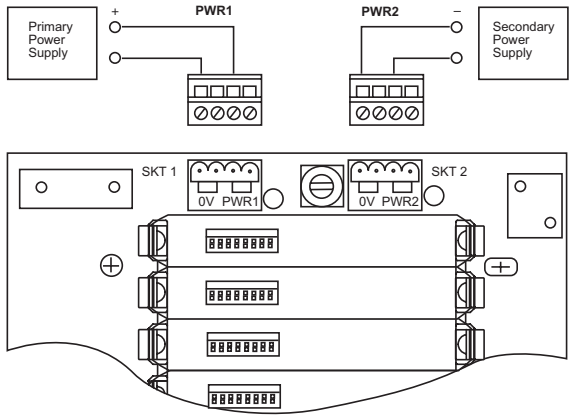

Figure 4.11: Power supply connections

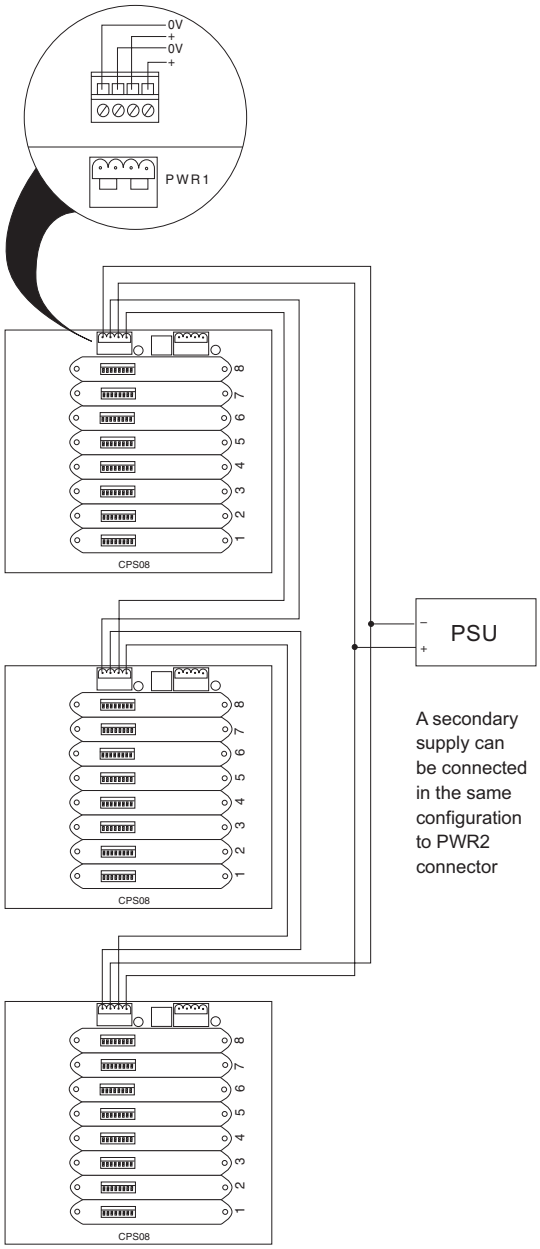

Figure 4.12: "Ring" wiring multiple backplanes

4.5 Backplanes - earth rails

Optional earth rails are available for backplanes (kit ERK08). Cable screens from hazardous-area circuits, or spare pairs from a multicore cable, are connected to the terminals on the earth rails, which are mounted on the backplane at about the same height as the front of the modules, close to the hazardous-area connectors. Earth rails are attached using the following procedure:–

4.5.1 Earth rail kit (ERK08)

See Figures 4.1, 4.9 and 4.10.

a) Locate the earth rail mounting posts (1) at backplane centres C (Figures 4.1 and 4.9).

b) Attach the mounting posts (1) with M3 x 12 screws (3) and washers (4) (Figure 4.9).

c) Slide the earth rail (5) through the slots in the of the mounting posts (1) (Figure 4.10).

d) Fit the earth terminal(s) (6) on the rail (5) (Figure 4.10).

e) Attach plastic retaining rivets (7) to each end of the earth rail (5) (Figure 4.10).

4.6 Backplanes – power supply connections

4.6.1 Single backplane

Dual 24V power supplies, to provide redundancy, are routed to the backplane by plug-in connectors and then bussed by the backplane to individual power supply modules. LEDs on the backplane indicate that the two supplies are operational. A diode circuit between the two ensures that the highest voltage supply is the one in use at any given moment, so providing automatic switchover of supplies if the primary source fails. The procedure for connecting power supplies is:–

a) Connect each of the two 21V to 35V dc power supply connectors to the independent supply sources according to the terminal assignments shown in Figure 4.11. The maximum permissible wire size is 2.5mm^2 (14 AWG).

b) Plug the power supply connectors into the base connectors on the backplanes.

c) The rating for the fuse located between the two supply connectors on the backplanes is 1A.

4.6.2 Interconnection of power supplies for multiple backplanes

Power supplies for backplanes can be interconnected in the form of a ring. This will reduce wiring and also permit individual backplanes to be taken out of service without affecting supplies to other backplanes. More than one backplane can be removed, provided that they are neighbours and do not leave any other backplanes without an active supply.

a) Make the connections shown in Figure 4.12.

Wire sizes up to 2.5mm^2 (14 AWG) can be used and should be chosen according to load and voltage drop.

4.7 Fitting MTL 9492-PS-PLUS modules to backplane

WARNING !

When installing MTL 9492-PS-PLUS power supply modules it is essential to make sure that intrinsically safe and non-intrinsically safe wiring is segregated as required by a nationally accepted authority or as described in BS EN 60079-14, ISA RP 12.6 or DIN VDE-165.

4.7.1 Installation - Figure 4.15

a) Trim insulation to suit bare or ferrule wire end (Figure 4.13)

b) Terminate IS power (PoEx) wiring on blue connector(s).

c) Mount interface unit on the backplane.

d) Locate input bulk power connector(s) on backplane safe-area/power supply connector(s).

4.7.2 Module removal - Figure 4.16

a) Unclip the latch nearest the CE mark on the module label.

b) Rotate the module away from this latch.

c) When the module is unplugged from the power connector, move the module clear of the other latch and remove.

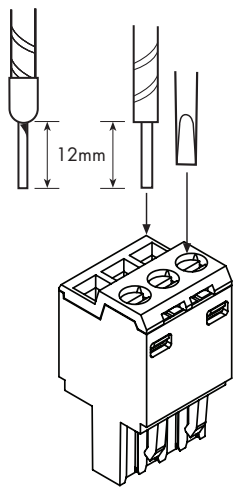

Figure 4.13: Wiring hazardous-area power output plugs

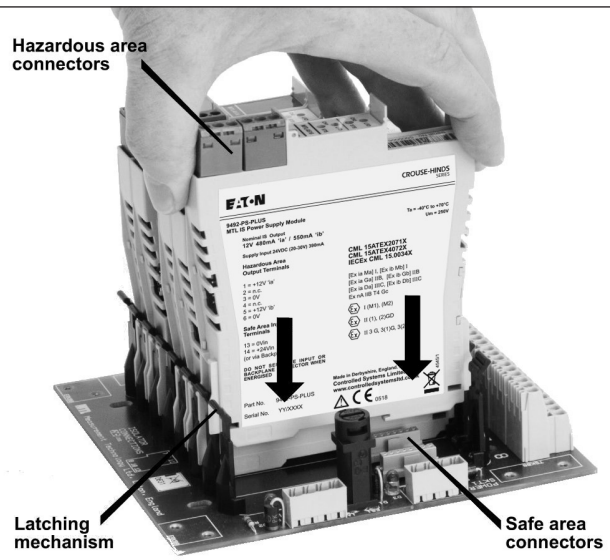

Figure 4.15: Fitting power supplies to backplane

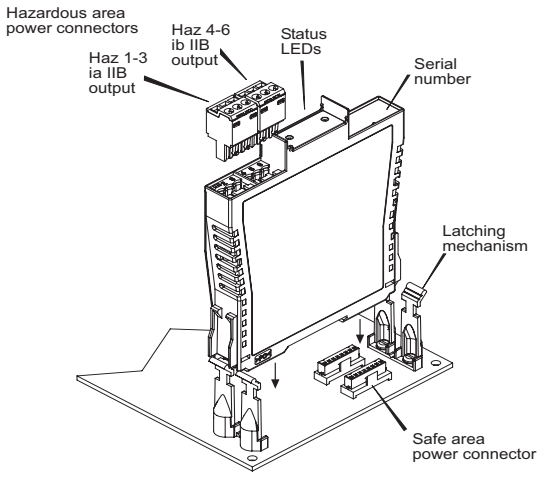

Figure 4.14: Key elements of the MTL 9492-PS-PLUS power supply

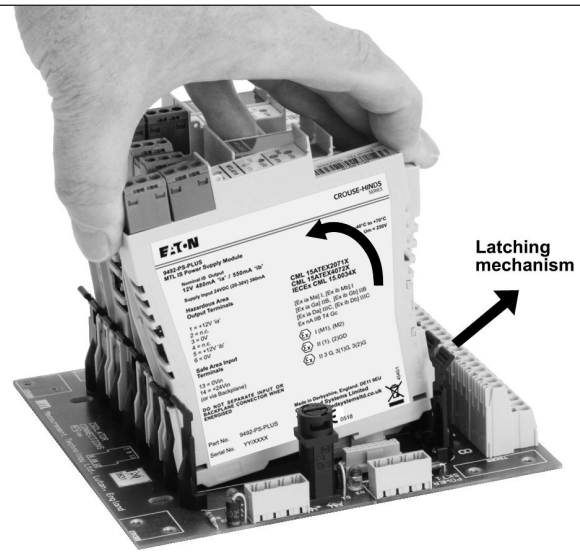

Figure 4.16: Removing power supplies from backplane

5 ENVIRONMENTAL

Operating Temperature	-40°C…+70°C
Storage Temperature	–40°C…+70°C
Humidity	5…95% RH, non condensing

6 WASTE REMOVAL INFORMATION

The electronic equipment within must not be treated as general waste. By ensuring that this product is disposed of correctly you will be helping to prevent potentially negative consequences for the environment and human health, which could otherwise be caused by incorrect waste handling of this product.

For more detailed information about the take-back and recycling contact MTL product line.

7 APPROVALS

The operating parameters must not exceed those as detailed on the certificate.

- 2014/30/EU EMC Directive
- 2014/35/EU Low Voltage Directive

Region	Europe (ATEX/UKEX)	International IECEx	North America (MET$_{c/us}$)
Authority	CML	CML / TRA*	CML / Eurofins
Standard	EN 60079-0:2018 EN 60079-11:2012	IEC 60079-0:2017 IEC 60079-11:2011	UL 60079-0:2019 / CSA C22.2 No.60079-0:19 UL 60079-11:2014 / CSA C22.2 No. 60079-11:14
Approved for	Ⓔx II (1), (2)GD [Ex ia Ga] IIB, [Ex ib Gb] IIB [Ex ia Da] IIIC, [Ex ib Db] IIIC Ⓔx I (M1), (M2) [Ex ia Ma] I, [Ex ib Mb] I Ta = -40°C to +70°C	[Ex ia Ga] IIB, [Ex ib Gb] IIB [Ex ia Da] IIIC, [Ex ib Db] IIIC [Ex ia Ma] I, [Ex ib Mb] I Ta = -40°C to +70°C	Refer to Control Drawing 949X-PS-XXX MET for approval information
Cert. no.	CML 15ATEX2071X CML 21UKEX21069X	IECEx CML 15.0034X IECEx TRA 17.0003X*	File E115585
Standard	EN 60079-0:2018 EN 60079-15:2010	IEC 60079-0:2017 IEC 60079-15:2010	UL 60079-15:2013 / CSA C22.2 No. 60079-15:16 UL 61010-1:2015 +Amd 1 2019 / CSA C22.2 No. 61010-1-12/A1:18
Approved for	Ⓔx II 3G Ex nA IIB T4 Gc (Ta = -40°C to +70°C)	Ex nA IIB T4 Gc (Ta = -40°C to +70°C)	Refer to Control Drawing 949X-PS-XXX MET for approval information
Cert. no.	CML 15ATEX4072X CML 21UKEX41070X	IECEx CML 15.0034X	File E115585

* NOTE- IECEx TRA 17.0003X certificate is for QLD Group I mining

Notes

1. Terminals 1 and 3
2. Terminals 5 and 6

8 ATEX, UKEX, IECEX & MET CERTIFICATION INFORMATION

The following information is in accordance with the Essential Health and Safety Requirements (Annex II) of the EU Directive 2014/34/EU [the ATEX Directive- safety of apparatus] and SI 2016 No.1107 [UKEX Statutory Requirements] and is provided for those locations where the ATEX Directive and/or UKEX requirements are applicable.

General

a) This equipment must only be installed, operated and maintained by competent personnel. Such personnel shall have undergone training, which included instruction on the various types of protection and installation practices, the relevant rules and regulations, and on the general principles of area classification. Appropriate refresher training shall be given on a regular basis. [See clause 4.2 of IEC/EN 60079-17].

b) This equipment has been designed to provide protection against all the relevant additional hazards referred to in Annex II of the directive, such as those in clause 1.2.7. This equipment has been designed to meet the requirements of intrinsically safe electrical apparatus in accordance with IEC/EN 60079-0, IEC/EN 60079-11and IEC/EN 60079-15.

Installation

a) Reference to the IEC code of practice IEC 60079-14. In addition, particular industries or end users may have specific requirements relating to the safety of their installations and these requirements should also be met. For the majority of installations the Directive 1999/92/EC [the ATEX Directive- safety of installations] is also applicable.

b) Unless already protected by design, this equipment must be protected by a suitable enclosure against:
i) mechanical and thermal stresses in excess of those noted in the certification documentation and the product specification.
ii) aggressive chemical or substances, excessive dust, moisture and other contaminants.

c) This apparatus is intrinsically safe electrical apparatus and is normally mounted in a safe area. When mounted in a Zone 2 location the apparatus must be provided with an enclosure, which offers an additional degree of protection appropriate to the area classification.

Special conditions for safe use (when mounted in a Zone 2 hazardous area)

a) If the equipment is installed in a zone 2 hazardous area, it shall be housed in an enclosure that is coded Ex nA, Ex e, Ex d or Ex p, suitable for operating temperatures of-40°C to +135°C and providing an ingress protection of IP54 minimum. For some types of enclosure, additional certification will be required to permit the installation of the module within the enclosure. Reference should be made to the enclosure certificate. The installer shall ensure that the maximum ambient temperature of the module when installed is not exceeded.

b) When the device is mounted in a zoned area, connection and disconnection of the modules input supply voltage while live is only permitted if the potentially explosive atmosphere is shown to be absent.

Inspection and maintenance

a) Inspection and maintenance should be carried out in accordance with European, national and local regulations which may refer to the IEC standard IEC 60079-17. In addition specific industries or end users may have specific requirements which should also be met.

b) Access to the internal circuitry must not be made during operation.

Repair

This product cannot be repaired by the user and must be replaced with an equivalent certified product.

continued on next page

Marking

Each device is marked in accordance with the Directive/Statutory Requirements and CE and UKCA marked with the Notified/Approved Body Identification Number.

This information applies to products manufactured during or after the year 2010.

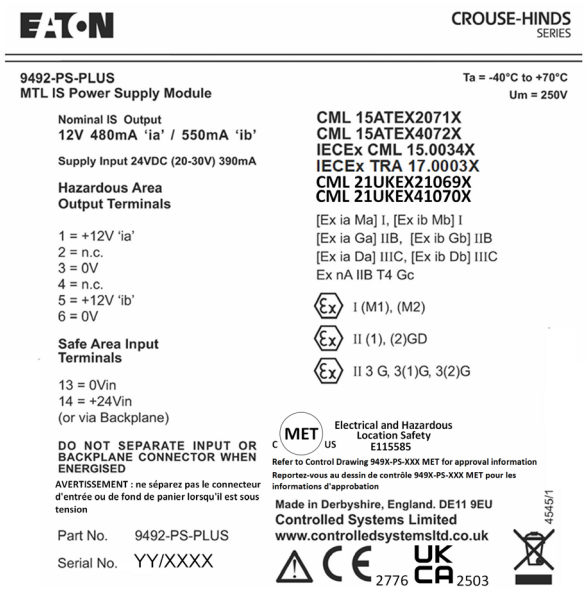

Figure 8.1 MTL 9492-PS-PLUS product label

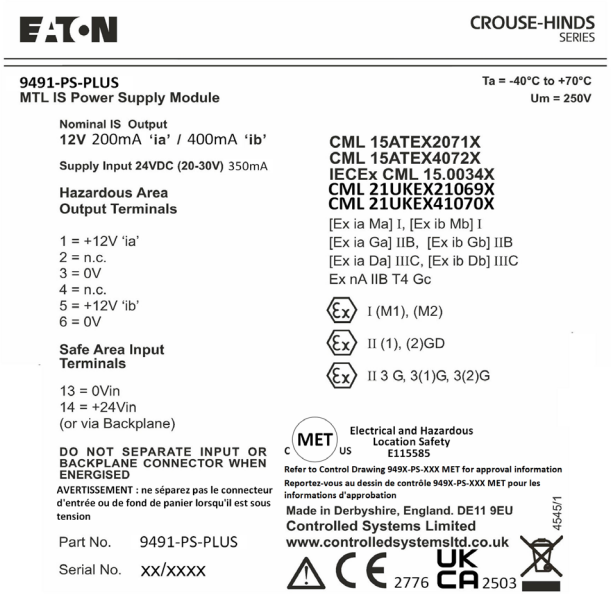

Figure 8.2 MTL 9491-PS-PLUS product label

NOTE: For North America, See Control Drawing on following pages

REV	DESCRIPTION	DATE
1	Original	23/01/2023

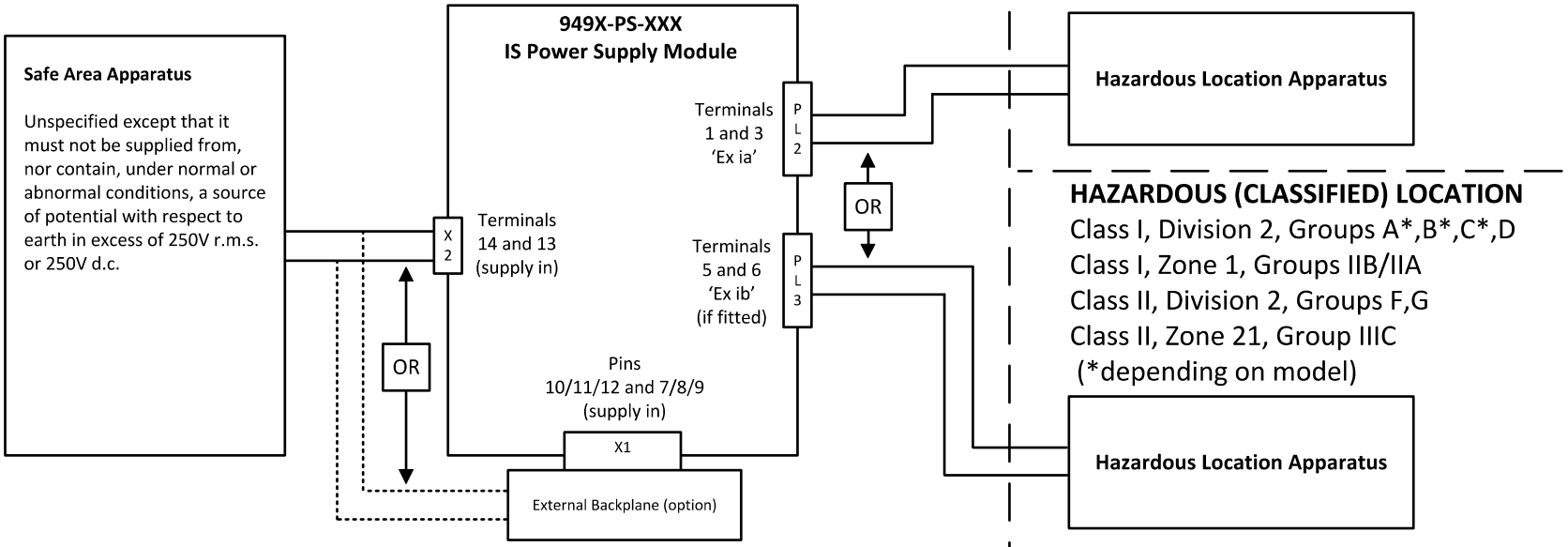

CONTROLLED SYSTEMS LTD.
SWADLINCOTE, DERBYSHIRE. ENGLAND

TITLE: 949X-PS-XXX MET Control Drawing

DRAWN : IAC
DATE: 23/01/2023

SIZE	DWG NO	REV
A3	949X-PS-XXX MET	1

SCALE | SHEET 1 OF 4

REV	DESCRIPTION	DATE
1	Original	23/01/2023

HAZARDOUS (CLASSIFIED) LOCATION
Class I, Division 2, Groups A*,B*,C*,D
Class I, Zone 2, Groups IIC*/IIB*/IIA
(*depending on model)

HAZARDOUS (CLASSIFIED) LOCATION
Class I, Division 1, Groups A*,B*,C*,D
Class I, Zone 0 or 1, Groups IIC*/IIB*/IIA
Class II, Division 1, Groups E,F,G
Class II, Zone 20 or 21, Group IIIC
(*depending on model)

HAZARDOUS (CLASSIFIED) LOCATION
Class I, Division 2, Groups A*,B*,C*,D
Class I, Zone 1, Groups IIB/IIA
Class II, Division 2, Groups F,G
Class II, Zone 21, Group IIIC
(*depending on model)

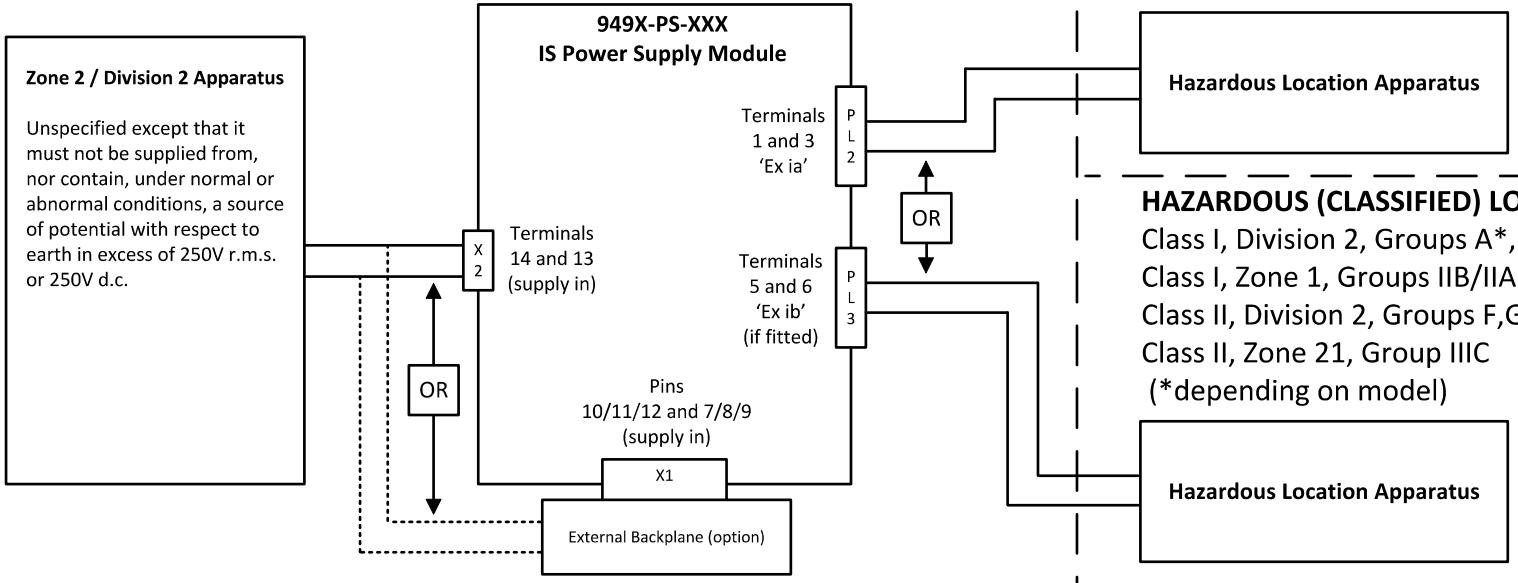

CONTROLLED SYSTEMS LTD.
SWADLINCOTE, DERBYSHIRE. ENGLAND

TITLE: 949X-PS-XXX MET Control Drawing

DRAWN : IAC	SIZE A3		DWG NO 949X-PS-XXX MET	REV 1
DATE: 23/01/2023	SCALE		SHEET 2 OF 4	

REV	DESCRIPTION	DATE
1	Original	23/01/2023

The 949X-PS-XXX IS Power Supply Module electrical parameters are:
Um = 250V

The circuit connected to the safe area terminals is designed to operate from a d.c. supply voltage of up to 30V.

Tamb = -40°C to +70°C

Part Number	Group	LOP	Nominal O/P Voltage	Uo (OVP)	Io	Po
9491-PS-PLUS	IIB	ia ib	10.0V … 12.2V	12.4V	2.61A or 505mA	8.09W or 6.27W
9492-PS-PLUS	IIB	ia ib	10.0V … 12.6V	12.8V	3.23A or 630mA	10.34W or 8.07W
9493-PS-C5	IIC	ia	4.8V … 5.2V	5.4V	4.01A	5.41W
9493-PS-B5	IIB	ia	4.8V … 5.2V	5.4V	8.26A	11.16W
9493-PS-C6	IIC	ia	5.7V … 6.7V	7.0V	3.21A	5.62W
9493-PS-C7	IIC	ia	6.6V … 7.7V	8.0V	3.11A	6.22W
9493-PS-C8	IIC	ia	7.6V … 8.7V	9.0V	3.03A	6.82W
9493-PS-C9	IIC	ia	8.4V … 9.7V	10.0V	2.81A	7.01W
9493-PS-C10	IIC	ia	9.1V … 10.7V	11.0V	2.53A	6.94W
9493-PS-C11	IIC	ia	9.9V … 11.7V	12.0V	2.25A	6.73W
9493-PS-C12	IIC	ia	10.8V … 12.7V	13.0V	1.99A	6.47W
9493-PS-C13	IIC	ia	11.3V … 13.7V	14.0V	1.14A	3.99W
9493-PS-B13	IIB	ia	11.3V … 13.7V	14.0V	2.62A	9.17W
9493-PS-A13	IIA	ia	11.3V … 13.7V	14.0V	3.21A	11.25W
9493-PS-C14	IIC	ia	12.4V … 14.7V	15.0V	0.83A	3.12W
9493-PS-B14	IIB	ia	12.4V … 14.7V	15.0V	2.10A	7.89W
9493-PS-A14	IIA	ia	12.4V … 14.7V	15.0V	2.81A	10.52W
9493-PS-C15	IIC	ia	13.2V … 15.7V	16.0V	0.67A	2.69W
9493-PS-B15	IIB	ia	13.2V … 15.7V	16.0V	1.58A	6.34W
9493-PS-A15	IIA	ia	13.2V … 15.7V	16.0V	2.24A	8.98W
9493-PS-C16	IIC	ia	14.1V … 16.7V	17.0V	0.48A	2.03W
9493-PS-B16	IIB	ia	14.1V … 16.7V	17.0V	1.26A	5.37W
9493-PS-A16	IIA	ia	14.1V … 16.7V	17.0V	1.83A	7.76W
9493-PS-C17	IIC	ia	15.0V … 17.7V	18.0V	0.41A	1.86W
9493-PS-B17	IIB	ia	15.0V … 17.7V	18.0V	1.11A	4.99W
9493-PS-A17	IIA	ia	15.0V … 17.7V	18.0V	1.47A	6.60W

The capacitance and the resistance ratio (L/R) of the load connected to the output terminals must not exceed the following values, when used as Ex ia:

Type	Group	Co (uF)	Lo/Ro (uH/Ω)
9491-PS-PLUS	IIB	7.9	17.2
	IIA	30	34.4
9492-PS-PLUS	IIB	6.8	13.8
	IIA	24.2	27.5
9493-PS-C5	IIC	65	6.6
9493-PS-B5	IIB	1000	12.7
	IIA	1000	25.5
9493-PS-C6	IIC	15.7	6.3
	IIB	300	25.3
	IIA	1000	50.6
9493-PS-C7	IIC	8.4	5.7
	IIB	100	22.9
	IIA	1000	45.8
9493-PS-C8	IIC	4.9	5.2
	IIB	40	20.9
	IIA	500	41.7
9493-PS-C9	IIC	3	5.1
	IIB	20	20.3
	IIA	100	40.6
9493-PS-C10	IIC	1.97	5.1
	IIB	13.8	20.5
	IIA	60	41
9493-PS-C11	IIC	1.41	5.3
	IIB	9	21.1
	IIA	36	42.2
9493-PS-C12	IIC	1	5.5
	IIB	6.2	22.0
	IIA	22.5	44.0
9493-PS-C13	IIC	0.73	8.9
9493-PS-B13	IIB	4.6	15.5
9493-PS-A13	IIA	17	25.3
9493-PS-C14	IIC	0.58	11.4
9493-PS-B14	IIB	3.55	18.0
9493-PS-A14	IIA	14	27.0
9493-PS-C15	IIC	0.46	13.2
9493-PS-B15	IIB	2.75	22.4
9493-PS-A15	IIA	11	31.7
9493-PS-C16	IIC	0.375	17.5
9493-PS-B16	IIB	2.2	26.5
9493-PS-A16	IIA	9	36.6
9493-PS-C17	IIC	0.309	19.1
9493-PS-B17	IIB	1.780	28.5
9493-PS-A17	IIA	7.6	43.1

The capacitance and the inductance of the load connected to the output terminals must not exceed the following values, when used as Ex ib:

Type	Group	Co (µF)	Lo (µH)
9491-PS-PLUS	IIB	0.5	100
9492-PS-PLUS	IIB	1.0	100

Equivalent Groups for Zones and Divisions:

IIC = Groups A, B, C, D
IIB = Groups C, D
IIA = Group D
IIIC = Groups E, F, G

CSL

CONTROLLED SYSTEMS LTD.
SWADLINCOTE, DERBYSHIRE. ENGLAND

TITLE: 949X-PS-XXX MET Control Drawing

DRAWN : IAC
DATE: 23/01/2023
SIZE: A3
DWG NO: 949X-PS-XXX MET
REV: 1
SCALE:
SHEET: 3 OF 4

REV	DESCRIPTION	DATE
1	Original	23/01/2023

General

The installation must be in accordance with the National Electrical Code (NEC), ANSI/ NFPA 70, Articles 504 and 505, the Canadian Electric Code (CEC), Part 1, Appendix F and ANSI/ISA-RP12.6.

US (Zones)

Associated apparatus for use in Unclassified Locations, providing intrinsically safe outputs for Class I, Zone 0 or 1, Group IIC*/IIB*/IIA Hazardous Locations when installed in accordance with Control Drawing 949X-PS-XXX MET
- [AEx ia Ga] II*
- [AEx ib Gb] II*

(*Group IIC, IIB or IIA depending on model)

Associated apparatus for use in Unclassified Locations, providing intrinsically safe outputs for Class II, Zone 20 or 21, Group IIIC Hazardous Locations when installed in accordance with Control Drawing 949X-PS-XXX MET
- [AEx ia Da] IIIC
- [AEx ib Db] IIIC

For use in Class I, Zone 2, Group IIC*/IIB*/IIA Hazardous Locations when installed in accordance with Control Drawing 949X-PS-XXX MET
- Class I, Zone 2 AEx nA II* T4 Gc

(*Group IIC, IIB or IIA depending on model)
Refer to Unclassified Locations above for Intrinsically Safe output options

US (Divisions)

Associated apparatus for use in Unclassified Locations providing intrinsically safe outputs for Class I, Division 1 or Class I, Division 2, Groups A-D* Hazardous Locations when installed in accordance with Control Drawing 949X-PS-XXX MET
(*Groups A,B,C,D depending on model)

Associated apparatus for use in Unclassified Locations providing intrinsically safe outputs for Class II, Division 1 or Class II, Division 2, Groups E-G Hazardous Locations when installed in accordance with Control Drawing 949X-PS-XXX MET

For use in Class I, Division 2, Groups A-D*, T4 Hazardous Locations when installed in accordance with Control Drawing 949X-PS-XXX MET
(*Groups A,B,C,D depending on model)
Refer to Unclassified Locations above for Intrinsically Safe output options

Canada (Zones)

Associated apparatus for use in Unclassified Locations, providing intrinsically safe outputs for Class I, Zone 0 or 1, Group IIC*/IIB*/IIA Hazardous Locations when installed in accordance with Control Drawing 949X-PS-XXX MET
- [Ex ia Ga] II*
- [Ex ib Gb] II*

(*Group IIC, IIB or IIA depending on model)

Associated apparatus for use in Unclassified Locations, providing intrinsically safe outputs for Class II, Zone 20 or 21, Group IIIC Hazardous Locations when installed in accordance with Control Drawing 949X-PS-XXX MET
- [Ex ia Da] IIIC
- [Ex ib Db] IIIC

For use in Class I, Zone 2, Group IIC*/IIB*/IIA Hazardous Locations when installed in accordance with Control Drawing 949X-PS-XXX MET
- Class I, Zone 2 Ex nA II* T4 Gc

(*Group IIC, IIB or IIA depending on model)
Refer to Unclassified Locations above for Intrinsically Safe output options

Canada (Divisions)

Same markings as for US(Divisions) above.

CSL	CONTROLLED SYSTEMS LTD. SWADLINCOTE, DERBYSHIRE. ENGLAND		
	TITLE: 949X-PS-XXX MET Control Drawing		
DRAWN : IAC	SIZE A3	DWG NO 949X-PS-XXX MET	REV 1
DATE: 23/01/2023	SCALE	SHEET 4 OF 4	

Appendix A

949X-PS-XXX IS Power Supply Module (Parameters Relating: CML 15ATEX2071X Issue 3)

Um = 250V

The circuit connected to the safe area terminals is designed to operate from a d.c. supply voltage of up to 30V.

Part Number	Group	LOP	Nominal O/P Voltage	Uo (OVP)	Io	Po
9491-PS-PLUS	IIB/IIA/I	ia ib	10.0V ... 12.2V	12.4V	2.61A or 505mA	8.09W or 6.27W
9492-PS-PLUS	IIB/IIA/I	ia ib	10.0V ... 12.6V	12.8V	3.23A or 630mA	10.34W or 8.07W
9493-PS-C5	IIC	ia	4.8V ... 5.2V	5.4V	4.01A	5.41W
9493-PS-B5	IIB	ia	4.8V ... 5.2V	5.4V	8.26A	11.16W
9493-PS-C6	IIC	ia	5.7V ... 6.7V	7.0V	3.21A	5.62W
9493-PS-C7	IIC	ia	6.6V ... 7.7V	8.0V	3.11A	6.22W
9493-PS-C8	IIC	ia	7.6V ... 8.7V	9.0V	3.03A	6.82W
9493-PS-C9	IIC	ia	8.4V ... 9.7V	10.0V	2.81A	7.01W
9493-PS-C10	IIC	ia	9.1V ... 10.7V	11.0V	2.53A	6.94W
9493-PS-C11	IIC	ia	9.9V ... 11.7V	12.0V	2.25A	6.73W
9493-PS-C12	IIC	ia	10.8V ... 12.7V	13.0V	1.99A	6.47W
9493-PS-C13	IIC	ia	11.3V ... 13.7V	14.0V	1.14A	3.99W
9493-PS-B13	IIB	ia	11.3V ... 13.7V	14.0V	2.62A	9.17W
9493-PS-A13	IIA	ia	11.3V ... 13.7V	14.0V	3.21A	11.25W
9493-PS-C14	IIC	ia	12.4V ... 14.7V	15.0V	0.83A	3.12W
9493-PS-B14	IIB	ia	12.4V ... 14.7V	15.0V	2.10A	7.89W
9493-PS-A14	IIA	ia	12.4V ... 14.7V	15.0V	2.81A	10.52W
9493-PS-M14	I	ia	12.4V ... 14.7V	15.0V	3.16A	11.84W
9493-PS-C15	IIC	ia	13.2V ... 15.7V	16.0V	0.67A	2.69W
9493-PS-B15	IIB	ia	13.2V ... 15.7V	16.0V	1.58A	6.34W
9493-PS-A15	IIA	ia	13.2V ... 15.7V	16.0V	2.24A	8.98W
9493-PS-M15	I	ia	13.2V ... 15.7V	16.0V	2.99A	11.97W
9493-PS-C16	IIC	ia	14.1V ... 16.7V	17.0V	0.48A	2.03W
9493-PS-B16	IIB	ia	14.1V ... 16.7V	17.0V	1.26A	5.37W
9493-PS-A16	IIA	ia	14.1V ... 16.7V	17.0V	1.83A	7.76W
9493-PS-M16	I	ia	14.1V ... 16.7V	17.0V	2.20A	9.36W
9493-PS-C17	IIC	ia	15.0V ... 17.7V	18.0V	0.41A	1.86W
9493-PS-B17	IIB	ia	15.0V ... 17.7V	18.0V	1.11A	4.99W
9493-PS-A17	IIA	ia	15.0V ... 17.7V	18.0V	1.47A	6.60W
9493-PS-M17	I	ia	15.0V ... 17.7V	18.0V	1.93A	8.70W

Note: IIC model may be used in Gas Groups IIC/IIB/IIA/I
IIB model may be used in Gas Groups IIB/IIA/I
IIA model may be used in Gas Groups IIA/I

The capacitance and the resistance ratio (L/R) of the load connected to the output terminals must not exceed the following values, when used as Ex ia:

Type	Group	Co	Lo	Lo/Ro
		(uF)	(uH)	(uH/Ω)
9491-PS-PLUS	IIB	7.9	50	17.2
	IIA	30	90	34.4
	I	34	150	56.4
9492-PS-PLUS	IIB	6.8	30	13.8
	IIA	24.2	60	27.5
	I	30	100	45.1
9493-PS-C5	IIC	65	-	6.6
9493-PS-B5	IIB	1000	-	12.7
	IIA	1000	10	25.5
	I	1000	20	41.8
9493-PS-C6	IIC	15.7	10	6.3
	IIB	300	30	25.3
	IIA	1000	60	50.6
	I	1000	100	83.0
9493-PS-C7	IIC	8.4	10	5.7
	IIB	100	30	22.9
	IIA	1000	70	45.8
	I	1000	110	75.1
9493-PS-C8	IIC	4.9	10	5.2
	IIB	40	30	20.9
	IIA	500	70	41.7
	I	1000	110	68.4
9493-PS-C9	IIC	3	10	5.1
	IIB	20	40	20.3
	IIA	100	80	40.6
	I	180	130	66.5
9493-PS-C10	IIC	1.97	10	5.1
	IIB	13.8	50	20.5
	IIA	60	100	41
	I	67.5	160	67.2
9493-PS-C11	IIC	1.41	20	5.3
	IIB	9	60	21.1
	IIA	36	130	42.2
	I	38	210	69.5
9493-PS-C12	IIC	1	20	5.5
	IIB	6.2	80	22.0
	IIA	22.5	160	44.0

	I	28.5	270	72.2
9493-PS-C13	IIC	0.73	60	8.9
9493-PS-B13	IIB	4.6	50	15.5
9493-PS-A13	IIA	17	060	25.3
9493-PS-C14	IIC	0.58	120	11.4
9493-PS-B14	IIB	3.55	70	18.0
9493-PS-A14	IIA	14	80	27.0
9493-PS-M14	I	17.8	110	39.4
9493-PS-C15	IIC	0.46	180	13.2
9493-PS-B15	IIB	2.75	130	22.4
9493-PS-A15	IIA	11	130	31.7
9493-PS-M15	I	15.2	120	39.0
9493-PS-C16	IIC	0.375	350	17.5
9493-PS-B16	IIB	2.2	200	26.5
9493-PS-A16	IIA	9	190	36.6
9493-PS-M16	I	12.64	220	49.9
9493-PS-C17	IIC	0.309	480	19.1
9493-PS-B17	IIB	1.780	260	28.5
9493-PS-A17	IIA	7.6	300	43.1
9493-PS-M17	I	10	280	53.6

The capacitance and the inductance of the load connected to the output terminals must not exceed the following values, when used as Ex ib:

Type	**Group**	**Co**	**Lo**
		(µF)	**(µH)**
9491-PS-PLUS	IIB/IIA/I	0.5	100
9492-PS-PLUS	IIB/IIA/I	1.0	100

This page left intentionally blank

This page left intentionally blank

CROUSE-HINDS
SERIES

EATON Crouse-Hinds series

The safety you rely on.

See the complete MTL product portfolio at **www.mtl-inst.com**

For more information:
If further assistance is required, please contact an authorised MTL Distributor, Sales Office, or Customer Service Department

www.eaton.com

Eaton Electric Ltd
Great Marlings, Butterfield, Luton
Beds LU2 8DL

Tel: +44 (0) 1582 723633 Fax: +44 (0)1582 422283
E-mail: mtlenquiry@eaton.com

Powering Business Worldwide

Eaton Electric Limited,
Great Marlings, Butterfield, Luton
Beds, LU2 8DL, UK.
Tel: + 44 (0)1582 723633 Fax: + 44 (0)1582 422283
E-mail: mtlenquiry@eaton.com
www.eaton.com

© 2025 Eaton
All Rights Reserved
Publication No. INM 9492-PS-PLUS Rev 5 241125
November 2025

EUROPE (EMEA):
+44 (0)1582 723633
mtlenquiry@eaton.com

THE AMERICAS:
+1 800 835 7075
mtl-us-info@eaton.com

ASIA-PACIFIC:
+65 6 645 9888
sales.mtlsing@eaton.com

The given data is only intended as a product description and should not be regarded as a legal warranty of properties or guarantee. In the interest of further technical developments, we reserve the right to make design changes.