Instruction manual
MTL intrinsic safety solutions

February 2024
INM 4500/4600 Rev 14

CROUSE-HINDS
SERIES

MTL4500/4600 range

Isolating interface units

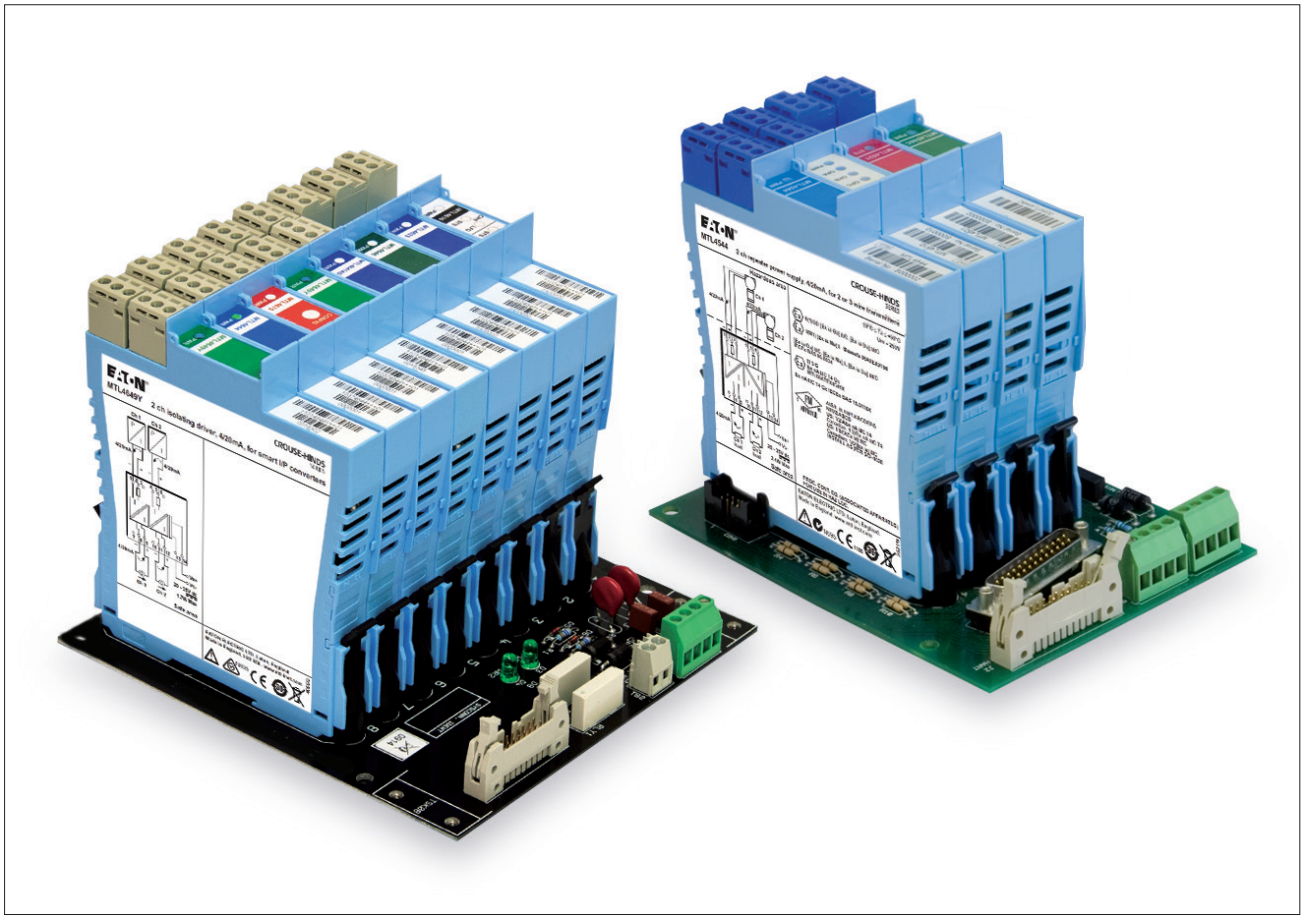

Powering Business Worldwide

DECLARATION OF CONFORMITY

A printed version of the Declaration of Conformity has been provided separately within the original shipment of goods. However, you can find a copy of the latest version at: http://www.mtl-inst.com/certificates

CONTENTS

DECLARATION OF CONFORMITY . . . . . **II**

IMPORTANT NOTE . . . . . **v**

ATEX/UKCA/IECEx SAFETY INSTRUCTIONS . . . . . **vi/vii**

1 INTRODUCTION **1**

1.1 General **1**
1.2 The MTL4500 concept **1**
1.3 The MTL4600 concept **1**

2 MTL4500 RANGE DESCRIPTION **3**

2.1 Standard backplanes **3**
2.2 Customised backplanes **3**
2.3 Accessories **3**

3 INSTALLATION – PRECAUTIONS **3**

3.1 General **3**
3.2 Precautions **3**

4 BACKPLANE INSTALLATION **5**

4.1 Backplane mounting **5**
4.2 Identification and tagging **6**
4.3 Backplane earth rails **8**
4.4 Backplane electrical connections **8**
4.5 Backplanes – customised **10**
4.6 Backplanes - module clip replacement **10**

5 INSTALLATION – MODULES **11**

5.1 Modules – pre-installation **11**
5.2 Modules – installation **12**

6 UNIT DESCRIPTIONS, SETTING-UP AND CONNECTIONS **14**

6.1 Digital Input modules **15**
6.1.1 Phase reversal 15
6.1.2 Line-Fault Detection (LFD) 15
6.1.3 MTL4501-SR - Fail-safe Switch/Proximity detector interface 16
6.1.4 MTL4504 - Switch/Proximity detector interface 17
6.1.5 MTL4510 & MTL4510B - Switch/Proximity detector interface 18
6.1.6 MTL4511 - Switch/Proximity detector interface 22
6.1.7 MTL4513 - Switch/Proximity detector interface 23
6.1.8 MTL4514/MTL4514B/MTL4514D - Switch/Proximity detector interface 24
6.1.9 MTL4514N - Switch/Proximity detector interface 25
6.1.10 MTL4516 - Switch/Proximity detector interface 26
6.1.11 MTL4516C - Switch/Proximity detector interface 27
6.1.12 MTL4517 - Switch/Proximity detector interface 28
6.2 Digital Output modules **29**
6.2.1 MTL4521/MTL4521L - Solenoid Alarm driver 29
6.2.2 MTL4523/MTL4523R - Solenoid Alarm driver 30
6.2.3 MTL4523L - Solenoid Alarm driver 31
6.2.4 MTL4523V/MTL4523VL - Solenoid Alarm driver 32
6.2.5 MTL4524 - Solenoid Alarm driver 33
6.2.6 MTL4524S - Solenoid Alarm driver 34
6.2.7 MTL4525 - Solenoid Alarm driver 35
6.2.8 MTL4526 - Switch operated relay 36
6.3 Pulse and Vibration modules **37**
6.3.1 MTL4531 - Vibration Transducer Interface 37
6.3.2 MTL4532 - Pulse Isolator 38
6.3.3 MTL4533 - Vibration Transducer Interface 40

(continued on next page)

6.4 Analogue Input modules . . . 41
6.4.1 MTL4541/MTL4541S/MTL4541Y - Repeater Power Supply . . . 41
6.4.2 MTL4541A/MTL4541AS/MTL4541YA - Current Repeater . . . 42
6.4.3 MTL4541B/MTL4541P/MTL4541T - Repeater Power Supply . . . 43
6.4.4 MTL4544/MTL4544S - Repeater Power Supply . . . 44
6.4.5 MTL4544A/MTL4544AS - Current Repeater . . . 45
6.4.6 MTL4544B - Repeater Power Supply . . . 46
6.4.7 MTL4544D - Repeater Power Supply . . . 47
6.5 Analogue Output modules . . . 48
6.5.1 MTL4545Y/MTL4546/MTL4546C/MTL4546S/MTL4546Y - Isolating Driver . . . 48
6.5.2 MTL4549/MTL4549C/MTL4549Y - Isolating Driver . . . 49
6.6 Fire and Smoke Interface modules . . . 50
6.6.1 MTL4561 - Fire and Smoke Detector Interface . . . 50
6.7 Temperature Input module . . . 51
6.7.1 MTL4573 - Temperature Converter . . . 52
6.7.2 MTL4575 - Temperature Converter . . . 53
6.7.3 MTL4576-RTD - Temperature Converter . . . 54
6.7.4 MTL4576-THC - Temperature Converter . . . 55
6.7.5 MTL4581 - mV/Thermocouple Isolator . . . 56
6.8 General modules . . . 57
6.8.1 MTL4599 - Dummy Isolator . . . 57
6.8.2 MTL4599N - General purpose feedthrough module . . . 57
6.9 PCS45/PCL45USB configurator for MTL temperature converters . . . 58

7 FAULT FINDING AND ROUTINE MAINTENANCE . . . 59
7.1 Maintenance precautions . . . 59
7.2 Fault finding . . . 59
7.3 Routine maintenance . . . 59

8 BENCH TESTING MODULES . . . 61
8.1 Digital Input (DI) modules . . . 61
8.2 Digital Output (DO) modules . . . 62
8.3 Analogue Input (AI) Modules . . . 63
8.4 Analogue Output (AO) Modules . . . 65
8.5 Testing the functioning of other modules . . . 65

9 APPLICATIONS INVOLVING ZONE 2 AND/OR ZONE 22 HAZARDOUS AREAS . . . 66
9.1 Enclosure . . . 66

10 APPENDIX . . . 67
10.1 Table A - Safety descriptions . . . 67
10.2 Table B - Maximum cable parameters . . . 68

© 2022 Eaton Electric Limited. All rights reserved.

IMPORTANT NOTE

This manual describes the installation and use of:

- **MTL4500 range of isolating interfaces for Intrinsic Safety**
- **MTL4600 range of signal conditioners**

The MTL4500 range of products are intended for protection of hazardous areas in process plants that apply Intrinsic Safety techniques.

Although functionally similar to the MTL4500 range, the MTL4600 range of isolator modules are *NOT certified or approved for connection to hazardous area circuits*.

To ensure both the segregation of equipment and the requisite separation of wiring, operation and maintenance activities, it is recommended that the MTL4500 and the MTL4600 range of modules are NOT mounted on the same backplane.

The use of separate backplanes for I.S. and non-I.S. signals reduces the possibility of confusion over 'safe operating practice' and is strongly recommended.

MTL4500 range of products

	WARNING ! This manual has content describing the use and installation of safety equipment. This equipment must be installed, operated and maintained only by trained competent personnel and in accordance with all appropriate international, national and local standard codes of practice and site regulations for intrinsically safe apparatus and in accordance with the instructions contained here.

ATEX

If the country of installation is governed by the Essential Health and Safety Requirements (Annex II) of the EU Directive 2014/34/EU [the ATEX Directive - safety of apparatus] then consult the ATEX safety instructions for safe use in this manual before installation.

Note: Refer to the website for multiple language safety instructions.

ELECTRICAL PARAMETERS

Refer to the certification documentation for the electrical rating of these products.

CERTIFICATION DOCUMENTATION

Our website http://www.mtl-inst.com contains product documentation regarding intrinsic safety certification for many locations around the world. Consult this data for information relevant to your local certifying authority.

FUNCTIONAL SAFETY

If the MTL4500 range of products are to be used in functional safety applications check that each module has been asssessed for that service and refer to the Safety Manual for details.

REPAIR

MTL4500 range of products MUST NOT be repaired. Faulty or damaged products must be replaced with an equivalent certified product.

CLEANING

Should modules require cleaning, use water only on a damp cloth.

CAUTION -
Read the instructions

CAUTION -
Hot surface

Symbols used on the product and in this manual

ATEX/UKCA/IECEx SAFETY INSTRUCTIONS

The following information is in accordance with the Essential Health and Safety Requirements (Annex II) of the EU Directive 2014/34/EU [the ATEX Directive - safety of apparatus), and Schedule 1 of the Equipment and Protective Systems Intended for Use in Potentially Explosive Atmospheres Regulations 2016 (UK S.I. 2016/1107) and is provided for those locations where the ATEX Directive or UKCA regulations are applicable.

General

a) This equipment must only be installed, operated and maintained by competent personnel. Such personnel shall have undergone training, which included instruction on the various types of protection and installation practices, the relevant rules and regulations, and on the general principles of area classification. Appropriate refresher training shall be given on a regular basis. [See clause 4.2 of IEC/EN 60079-17].

b) This equipment has been designed to provide protection against all the relevant additional hazards referred to in Annex II of the ATEX directive (such as clause 1.2.7) or Schedule 1 of the UK regulation (such as clause 13).

c) This equipment has been designed to meet the requirements of IEC/EN 60079-0, IEC/EN 60079-7, IEC/EN 60079-11 and IEC/EN 60079-15.

Installation

a) The installation must comply with the appropriate European, national and local regulations, which may include reference to the IEC code of practice IEC/EN 60079-14. In addition, particular industries or end users may have specific requirements relating to the safety of their installations and these requirements should also be met. For the EU, Directive 1999/92/EC [the ATEX Directive - safety of installations} is also applicable. For the UK, the Dangerous Substances and Explosive Atmospheres Regulations 2002 (DSEAR) is also applicable.

b) This apparatus is an associated electrical apparatus and is normally mounted in a non-hazardous [safe] area. The equipment may be installed in a Zone 2 location providing that equipment is covered by a suitable certificate and the relevant installation conditions are met. Refer to “Special Conditions for Safe Use – Zone 2 mounting” below.

c) Unless already protected by design, this equipment must be protected by a suitable enclosure against:

   i) mechanical and thermal stresses in excess of those noted in the certification documentation and the product specification

   ii) aggressive substances, excessive dust, moisture and other contaminants.

Read also the Special Conditions for Safe Use (below) for any additional or more specific information.

Special Conditions of Safe Use for Zone 2 applications

a) When used in Zone 2, the equipment must be installed in an enclosure or an environment that provides a degree of protection of at least IP54 and meets the relevant material and environmental requirements of IEC/EN 60079-0 and IEC/EN 60079-15.

b) The equipment must not be inserted or removed unless either:

   i) the area in which the equipment is installed is known to be non-hazardous or

   ii) the circuit to which it is connected has been de-energised.

c) The 24V supply for this equipment must be derived from a regulated power supply complying with the requirements of European Community Directives.

d) For MTL4511, MTL4514, MTL4514B, MTL4514D, MTL4516, MTL4516C, MTL4517, MTL4526 & MTL4532 only: Relay contacts may switch up to 35V, 2A and 100VA.

   For MTL4575: Relay contacts may switch up to 35V, 250mA.

e) Any backplane used does not form part of this certificate and shall be separately certified for use in Zone 2.

f) The associated backplane must be fitted with MTL4500 retention clips (use type MCK45 if not fitted) that allow the equipment to be 'clipped' to the backplane. The retention clips shall always be in place when the equipment is energised.

g) For 4573 Maximum Input/Output parameters – see certificate

h) Special Conditions will vary on individual certificates.

Inspection and maintenance

a) Inspection and maintenance should be carried out in accordance with European, national and local regulations which may refer to the standard IEC/EN 60079-17. In addition specific industries or end users may have specific requirements which should also be met.

b) Access to the internal circuitry must not be made during operation.

Repair

a) This product cannot be repaired by the user and must be replaced with an equivalent certified product.

Marking

Each device is marked in compliance with the EU Directive and UK regulation, and CE and UKCA marked accordingly.

Example label showing markings:

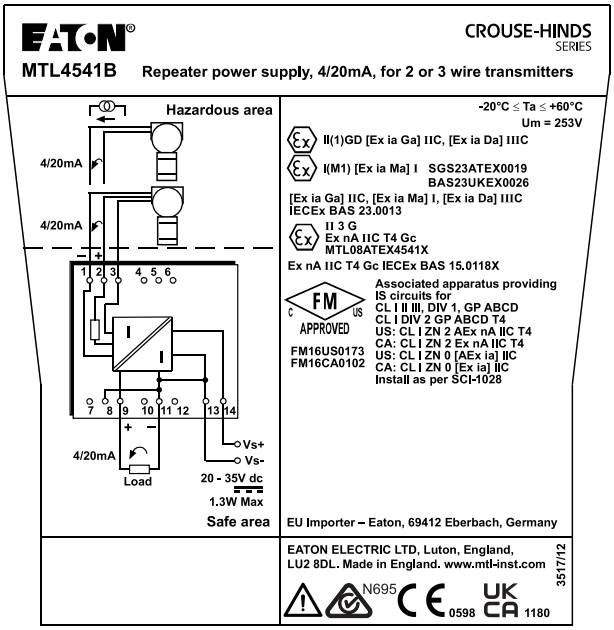

This page is left intentionally blank

1 INTRODUCTION

1.1 General

This instruction manual describes the procedures for installing, connecting, checking and maintaining MTL4500/4600 range of isolating interfaces and accessories. The MTL4500 products provide an intrinsically safe (IS) interface to a hazardous area of a process plant, while the MTL4600 range is exclusively for non-hazardous area service.

The individual sections cover the following topics

- Section 2 describes the range and its accessories
- Section 3 specifies precautions before installation
- Section 4 covers the installation of backplanes
- Section 5 describes the installation of modules onto the backplanes
- Section 6 provides relevant technical data
- Section 7 outlines fault-finding and maintenance
- Section 8 describes bench test procedures
- Section 9 provides hazardous-area application information
- Section 10 provides safety parameter information

1.2 The MTL4500 concept

The MTL4500 range of modules and accessories are designed for use with process connected systems. It consists of compact isolating interface modules mounted on backplanes, which carry safe-area signals and power supplies. Hazardous-area circuits connect to the **blue terminals** on the modules. Backplanes can be integrated into a user's process system architecture or mounted in separate enclosures.

1.3 The MTL4600 concept

The MTL4600 range of modules and accessories are designed for use with process connected systems, but in non-hazardous area applications. They are based on the MTL4500 range but have been given a separate identity to avoid the burden of administration previously associated with the use of IS modules in non-IS applications. Field equipment, located in non-hazardous areas, connects to the **grey terminals** on the modules.

Most of the mechanical and electrical characteristics shared by the two ranges are identical. The information contained in this manual relates specifically to the MTL4500 range of products; however, where an MTL4600 version of the module exists, the information is also applicable unless otherwise specified.

The table below lists the related products in the MTL4500/4600 ranges. Please refer to the MTL4500 data provided in this manual for both ranges. Any variation from the MTL4500 specification is indicated. Refer also to the individual MTL4500 and MTL4600 data sheets.

MTL4500/4600 modules

Digital Input		Channels	Function
MTL4501-SR	–	1	fail-safe, solid-state output + LFD alarm
MTL4504	MTL4604	1	switch/prox input, phase reversal + LFD
MTL4510	MTL4610	4	switch/prox input, solid-state output
MTL4510B	–	4	multi-function, switch/prox input, solid-state output
MTL4511	MTL4611	1	switch/prox input, c/o relay output
MTL4513	MTL4613	2	switch/prox input, solid-state output
MTL4514	MTL4614	1	switch/prox input, relay + LFD
MTL4514B	–	1	switch/prox input, relay + LFD
MTL4514D	–	1	switch/prox input, relay + LFD
MTL4514N	–	1	switch/prox input, LFD passthrough
MTL4516	MTL4616	2	switch/prox input, relay + LFD outputs
MTL4516C	–	2	switch/prox input, relay + LFD outputs
MTL4517	MTL4617	2	switch/prox input, c/o relay + LFD outputs
Digital Output			
MTL4521	MTL4621	1	loop-powered solenoid driver
MTL4521L	–	1	low powered, loop-powered, IIC
MTL4521Y	–	1	loop-powered solenoid driver
MTL4523	MTL4623	1	solenoid driver with LFD
MTL4523L	MTL4623L	1	loop- powered solenoid driver with LFD
MTL4523R	MTL4623R	1	solenoid driver with reverse LFD
MTL4523V	–	1	solenoid driver with LFD + voltage control, IIC
MTL4523VL	–	1	solenoid driver with LFD + voltage control, IIC
MTL4523Y	–	1	solenoid driver with LFD + voltage control, IIC
MTL4524	MTL4624	1	switch operated solenoid driver
MTL4524S	MTL4624S	1	switch operated solenoid driver, 24V override
MTL4525	–	1	switch operated solenoid driver, low power
MTL4526	MTL4626	2	switch operated relay
Pulse & Vibration Output			
MTL4531	–	1	vibration probe interface
MTL4532	MTL4632	1	pulse isolator, digital or analogue output
MTL4533	–	2	vibration probe interface
Analogue Input			
MTL4541	MTL4641	1	2/3 wire transmitter repeater
MTL4541A	MTL4641A	1	transmitter repeater, passive input
MTL4541AS	MTL4641AS	1	transmitter repeater, passive input, current sink
MTL4541S	MTL4641S	1	2/3 wire transmitter repeater, current sink
MTL4541T	–	1	2/3 wire transmitter repeater
MTL4541Y	–	1	2/3 wire transmitter repeater
MTL4541YA	–	1	transmitter repeater, passive input
MTL4544	MTL4644	2	2/3 wire transmitter repeater
MTL4544A	MTL4644A	2	transmitter repeater, passive input
MTL4544AS	MTL4644AS	2	transmitter repeater, passive input, current sink
MTL4544S	MTL4644S	2	2/3 wire transmitter repeater, current sink
MTL4544D	MTL4644D	1	2/3 wire transmitter repeater, dual output
Analogue Output			
MTL4545Y	–	1	4-20mA smart isolating driver + oc LFD
MTL4546	MTL4646	1	4-20mA smart isolating driver + LFD
MTL4546C	–	1	4-20mA smart isolating driver + oc LFD
MTL4546S	–	1	4-20mA smart isolating driver + oc LFD
MTL4546Y	MTL4646Y	1	4-20mA smart isolating driver + oc LFD
MTL4549	MTL4649	2	4-20mA smart isolating driver + LFD
MTL4549C	–	2	4-20mA smart isolating driver + oc LFD
MTL4549Y	MTL4649Y	2	4-20mA smart isolating driver + oc LFD
Fire and Smoke			
MTL4561	–	2	loop-powered for fire & smoke detectors
Temperature Input			
MTL4573	MTL4673	1	temperature converter, THC or RTD
MTL4573Y	–	1	temperature converter, THC or RTD
MTL4575	MTL4675	1	temperature converter, THC or RTD
MTL4576-RTD	MTL4676-RTD	2	temperature converter, RTD
MTL4576-THC	MTL4676-THC	2	temperature converter, THC
MTL4581	–	1	mV/thermocouple isolator for low level signals
General			
MTL4599	–	1	dummy module
MTL4599N	–	1	general purpose, feedthrough module

2 MTL4500 RANGE DESCRIPTION

Each module has a multi-pin connector in its base that plugs into a matching connector on the backplane. This connector carries all appropriate safe-area circuits and power supplies. Additional multiway connectors, located at the front of the module, accept the wiring from the hazardous-area circuits. All connectors are keyed so that connections cannot be made the 'wrong way round'.

Status LEDs and configuration ports (where appropriate) are located on the front of the modules for easy access, and full dc isolation is provided between the input and output so that the modules are intrinsically safe without needing an earth.

2.1 Standard backplanes

MTL4500 range of standard backplanes, with quick-release clip connectors, accommodate 4, 8, 16 or 24 modules. The backplane carries the safe-area signals and distributes dual-redundant 24V dc power supplies with three-point status monitoring. In applications where a number of 8- and 16-way backplanes are installed, the power supplies can be interconnected. Optional earth-rail kits are available for 8- and 16-way backplanes and tagging-strip kits are available for all backplanes.

2.2 Customised backplanes

If the backplane is to be mounted in a safe area (which is the most common type of application) then it does not need to be certified, because the hazardous area wiring connects to the I/O modules, *not the backplane*. This means that non-hazardous area backplanes can be produced easily by Eaton, or the user, and can be designed to match exactly the size, shape, method of mounting, type of connector, pin assignments, etc, of a particular process system. Please contact Eaton's MTL product line for further information.

When mounting the backplane in Zone 2/Div 2 hazardous areas refer to our website for documents detailing any approvals.

2.3 Accessories

Accessories are available that enable the user to mount standard MTL backplanes. These include surface-mounting kits, T-section and G-section DIN-rail mounting kits and end stops and a horizontal plate for mounting 24-way backplanes in 19-inch racks.

3 INSTALLATION – PRECAUTIONS

3.1 General

Read this section before beginning to install backplanes, enclosures, modules etc.

3.2 Precautions

a) Make sure that all installation work is carried out in accordance with all relevant local standards, codes of practice and site regulations.

b) When planning the installation of MTL4500 range it is essential to **make sure that I.S. and non-I.S. wiring is segregated**, as required by a nationally accepted authority or as described in EN 60079-14 or ISA RP 12.6.

c) Check that the hazardous-area equipment complies with the descriptive system document.

d) If in doubt, refer to the certificate/catalogue for clarification of any aspects of intrinsic safety, or contact Eaton's MTL product line or your local representative for assistance.

e) Check that the interface unit(s) function(s) are correct for the application(s).

f) When plugging modules into backplanes and hazardous-area connectors into modules, check the identification labels to make sure the items match correctly.

g) External power supply shall contain double isolation from hazardous voltages or that unit shall be supplied by Limited Power Circuit per UL/IEC 60950 or Limited Energy Circuit per UL/IEC 61010 or Class II Power Supply per NEC.

h) Environmental conditions: indoor use, altitude (up to 2000m) and humidity less than 95% non condensing.

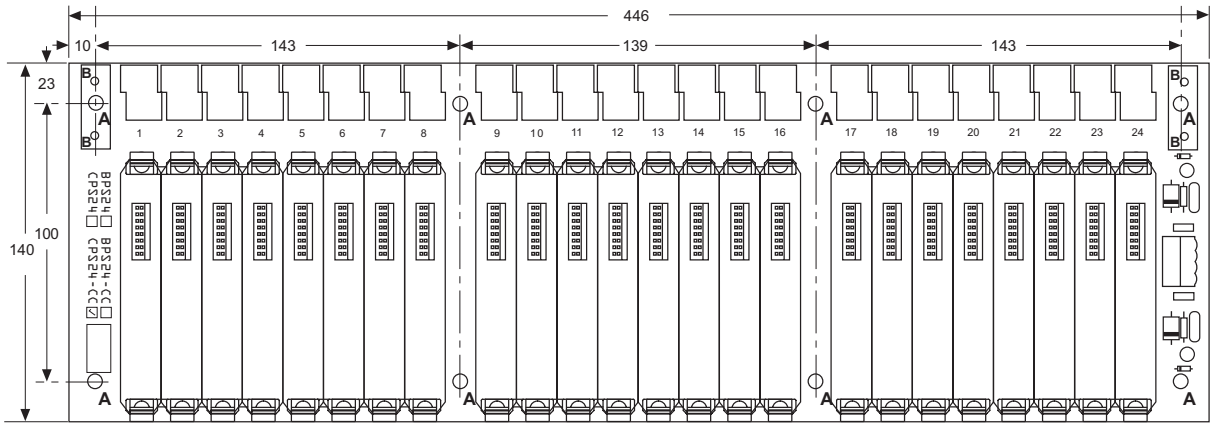

CPS24

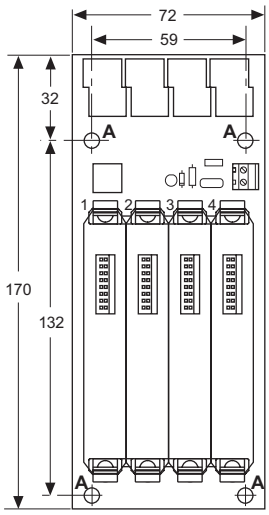

CPS04

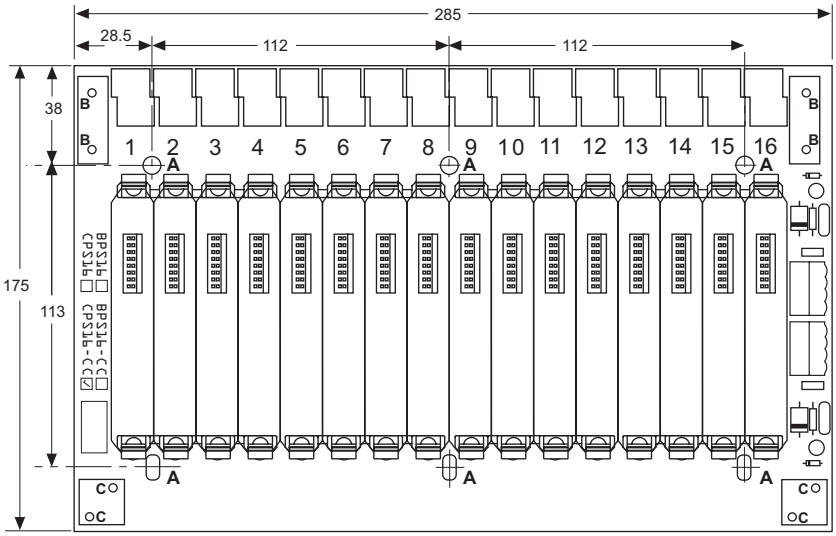

CPS16

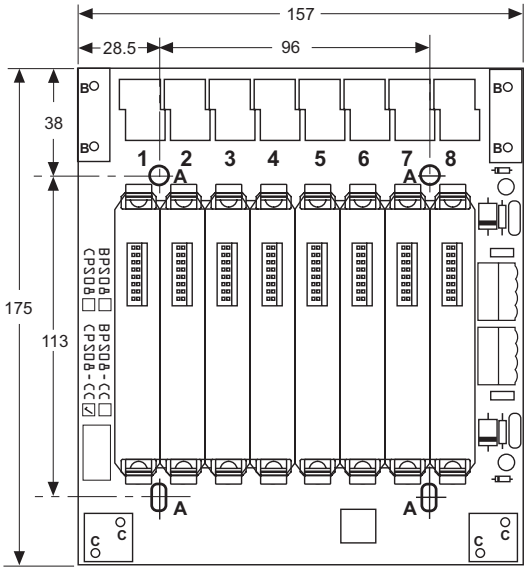

CPS08

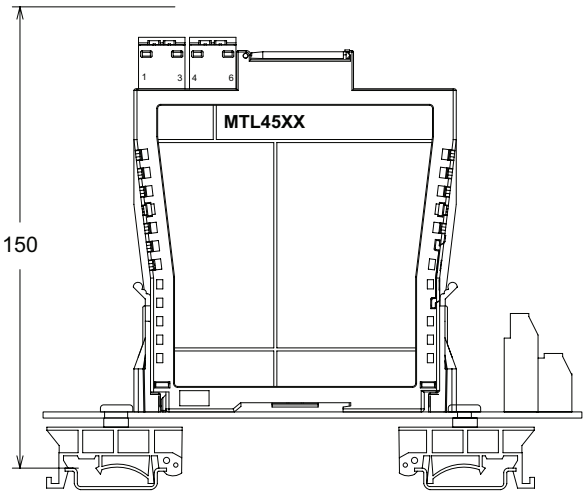

Figure 4.1: Standard backplanes with dimensions

4 BACKPLANE INSTALLATION

4.1 Backplane mounting

See Figure 4.1 for dimensions and mounting centres and Table 4.1 for a listing of the mounting options and the kits and accessories applicable to MTL standard backplanes.

Table 4.1: Backplanes, mounting kits and accessories

Backplane model number	Number of modules	Safe-area connections	Mounting Kits			Accessories		
			Surface	DIN-rail (T or G)	19-inch rack	Earth-rail kit	Tagging strip kit	Spare fuse pack
CPS04	4	Screw-clamp	SMS01	DMK01	–	–	–	FUS1.0ATE5
CPS08	8	Screw-clamp	SMS01	DMK01	–	ERK08	TSK08	FUS1.0ATE5
CPS16	16	Screw-clamp	SMS01	DMK01	–	ERK16	TSK16	FUS2.0ATE5
CPS24	24	Screw-clamp	SMS01	DMK01	HMP24	–	TSK24	FUS4.0ATE5

4.1.1 Surface mounting – with SMS01 mounting kit

Refer to Figures 4.1 and 4.2.

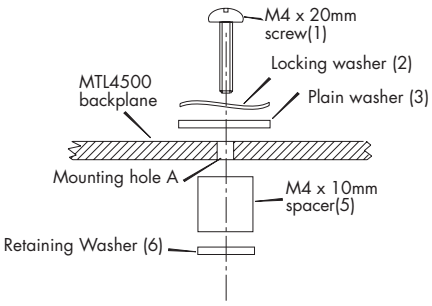

Figure 4.2: Surface mounting

a) Drill mounting surface at centres A (Figure 4.1) and tap, or fit retaining nuts if required.

b) Select the appropriate number of M4 x 20mm screws for the size of backplane (4 for a 4-way and 8-way, 6 for a 16-way and 8 for a 24-way backplane).

c) Fit each M4 x 20mm screw (1) with a locking washer (2) and a plain washer (3) (Figure 4.2).

d) Insert the screws through the backplane at each mounting centre A.

e) Fit each with an M4 x 10mm spacer (5) and a retaining washer (6) (Figure 4.2).

f) Attach the assemblies to the prepared surface using a suitable nut if the holes are not tapped.

4.1.2 T- or G-section DIN-rail mounting – with DMK01 mounting kit

See Figures 4.1 and 4.3.

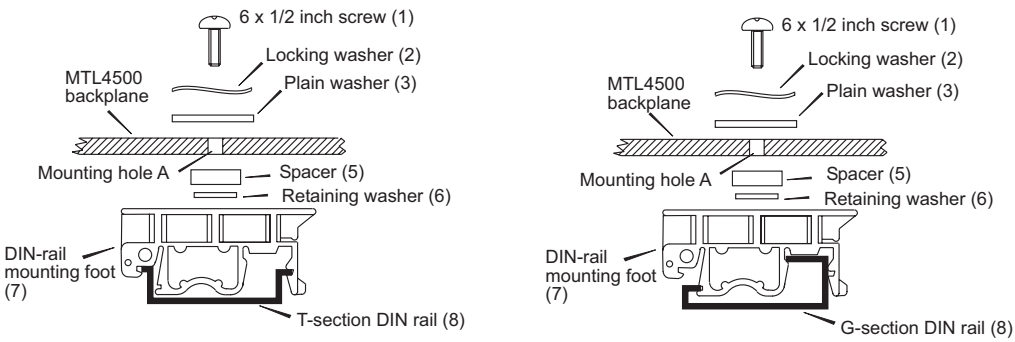

Figure 4.3: Mounting a backplane onto 'T' or 'G' section DIN rail

a) Cut two pieces of T- or G-section DIN-rail to the required length and fix them side-by-side with centres spaced appropriately – 132mm (CPS04), 113mm (CPS08/16) or 100mm (CPS24).

b) With reference to Figure 4.3, clip the appropriate number of mounting feet (7) to the DIN rail (8) at centres 'A' (4 for each 4/8-way, 6 for each 16-way and 8 for each 24-way backplane) (Figure 4.3).

c) Select the appropriate number of No. 6 x 1/2-inch screws (1) and fit each with a locking washer (2) and a plain washer (3) (Figure 4.3).

d) Insert the assemblies through the mounting holes A on the backplane (Figures 4.1 and 4.3).

e) Fit spacers (5), retaining them with the washers (6) (Figure 4.3).

f) Locate the assemblies over the mounting feet and attach the screws (1) to the feet (Figure 4.3).

NOTE: For vertically orientated backplanes it is recommended that end stops with screw fixings are fitted on the DIN rails immediately below the lowest backplane fixing. This will avoid the chance of backplane slippage down the DIN rail.

4.1.3 19-inch rack mounting – CPS24 backplanes with HMP24 mounting plate

See Figure 4.4.

a) Place an unloaded backplane onto the HMP24 mounting plate.

b) Attach the backplane to the mounting plate at centres A with the eight M4 x 12mm screws provided.

c) Attach the assembly to the 19-inch rack centres at D.

Figure 4.4: 19-inch rack mounting

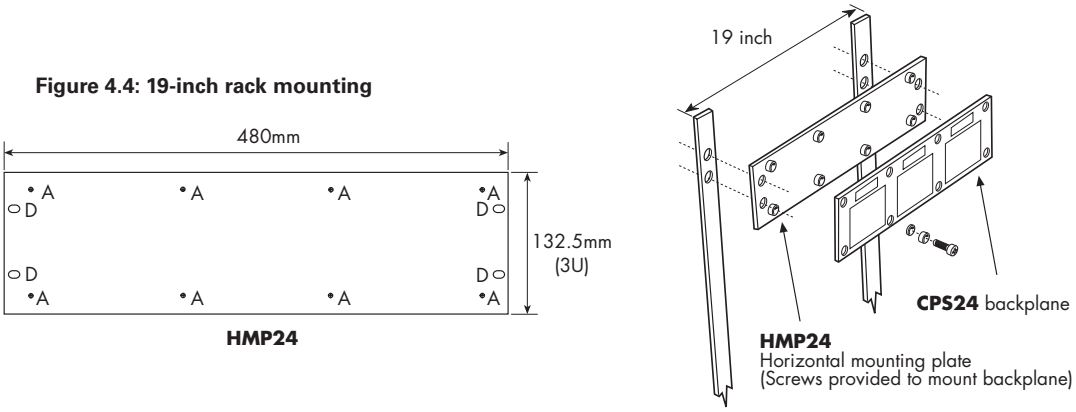

4.2 Identification and tagging

Backplane labelling facilities include marked areas for identifying backplanes, specific module locations and system connections (multiway backplanes only). Mounting holes for earth-rail and tagging-strip attachments are similarly marked

4.2.1 Backplane identification labels

a) Attach a suitably marked label to the area marked BACKPLANE IDENT to identify an individual backplane (Figure 4.5).

b) Attach suitably marked MPL01 module position labels to the areas marked MODULE IDENT (Figure 4.5).

4.2.2 Tagging strip mounting kit (TSK08, TSK16, TSK24)

See Figures 4.1, 4.6 and 4.7.

a) Attach the tagging strip mounting posts (1) at backplane centres B (Figure 4.1) using two M3 x 12mm mounting screws (2) and washers (3) (Figure 4.6).

b) Attach colour coding labels (4) to the tag label (5) (Figure 4.6). See Table 4.2 for suggested colour codes for individual modules.

c) Mark the tag label (5) with the tag reference.

d) Slide the tag label (5) into the plastic holder (6) and retain with a plastic rivet (9) (Figure 4.6).

e) Attach the plastic retaining tie (7) with two plastic rivets (8) (Figure 4.6).

f) Clip the tag strip holder (6) onto the mounting posts (1) by pushing it downwards (Figure 4.7).

g) If required, swivel the tagging strip vertically (Figure 4.7)

Colour	Module no.	Function
Yellow	MTL4501-SR MTL4504	Digital Inputs
White	MTL451x	
Red	MTL452x	Digital Outputs
Blue	MTL4531/33	Vibration
Purple	MTL4532	Pulse
Blue	MTL4541x MTL4544x	Analogue Inputs
Green	MTL4546x MTL4549x	Analogue Outputs
Blue	MTL456x	Fire & Smoke
Orange	MTL457x MTL4581	Temperature inputs
Grey	MTL4599	Dummy isolator

Table 4.2: MTL4500 front label colour coding

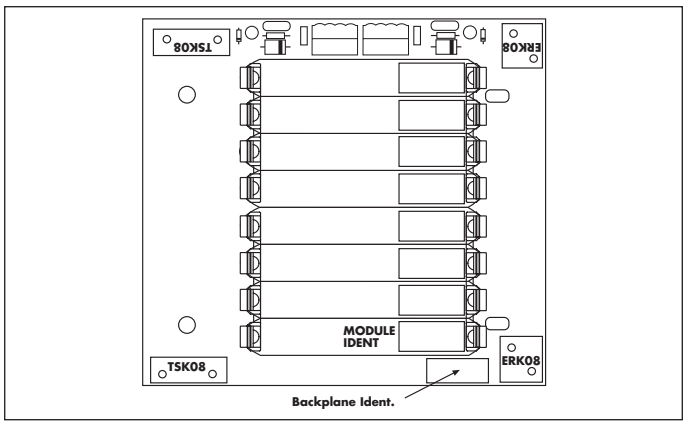

Figure 4.5: Locations for labels and attachments

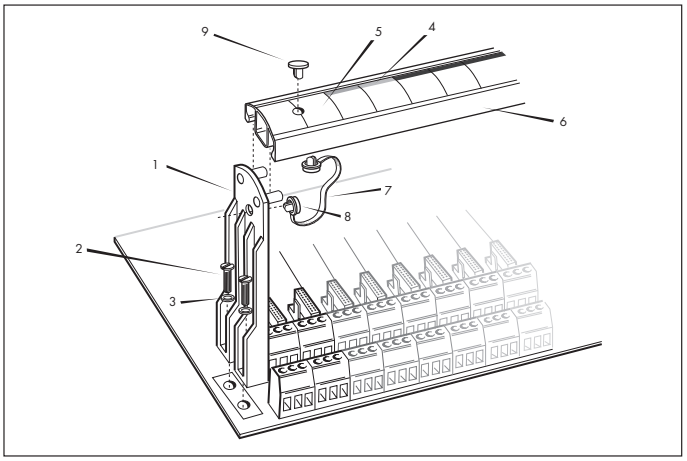

Figure 4.6: Mounting a tagging-strip post

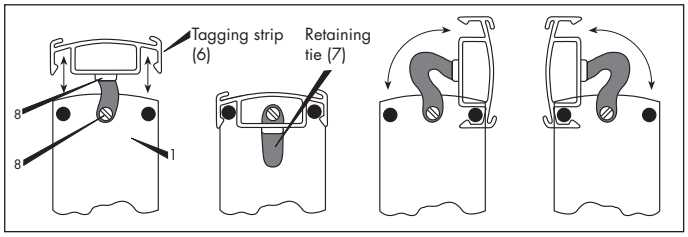

Figure 4.7: Attaching and swivelling a tagging-strip

4.3 Backplane earth rails

Optional earth rails are available for 8- and 16-way backplanes (kits ERK08 and ERK16 respectively). Cable screens from hazardous-area circuits, or spare pairs from a multicore cable, can be connected to the terminals on the earth rails, which are mounted on the backplane at about the same height as the front of the modules, close to the hazardous-area connectors. Proceed as follows.

4.3.1 Earth rail kit (ERK08 and ERK16)

See Figures 4.1 and 4.8.

a) Locate the earth rail mounting posts (1) at backplane centres C (Figures 4.1 and 4.8).

b) Attach the mounting posts (1) with M3 x 12 screws (3) and washers (4).

c) Slide the earth rail (5) through the slots in the of the mounting posts (1).

d) Fit the earth terminal(s) (6) on the rail (5).

e) Attach plastic retaining rivets (7) to each end of the earth rail (5).

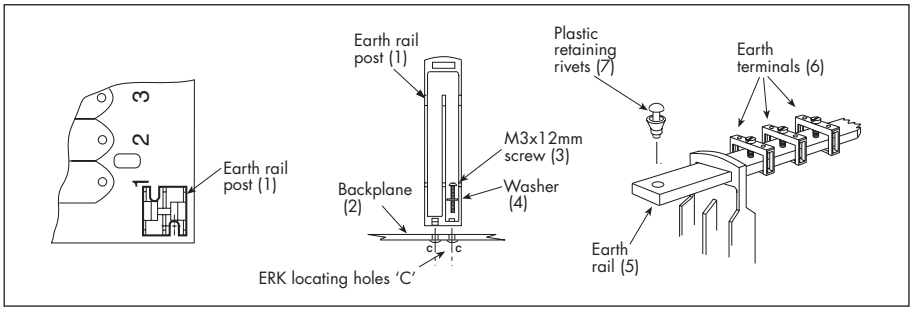

Figure 4.8: Earth rail post kit details

4.4 Backplane electrical connections

Safe-area circuit connections are made to the backplane by fixed screw-clamp terminals. Power supply connections are also made to the backplanes via *pluggable* screw-terminal connectors.

For optimum EMC performance, cables from local power supplies should not exceed 10m in length.

See section 4.4.2 for details, section 4.4.3 for a procedure to interconnect power supplies on multiple 8- and 16-way backplanes, and section 4.4.4 for details of connecting power supplies on
24-way backplanes.

4.4.1 Making connections

a) Trim back the insulation of conductors by 12mm.

b) Check the terminal assignments shown in section 6 or on the side label of the unit.

c) Insert conductors according to the terminal assignments and tighten screws. Torque range 0.4Nm to 0.6Nm.

If the wires are to be fitted with crimp ferrules, the following is a list of those recommended with required trim lengths for each:

Plug type	Entry	Wire size (mm^2)	Metal tube length (mm)	Trim length	Recommended ferrules
Signal	Single	0.75	12	14	Weidmuller 902591
Signal	Single	1.0	12	14	Cembre PKC112
Signal	Single	1.0	12	14	Phoenix Contact AI 1-12 RD (3200674)
Signal	Single	1.5	12	14	Cembre PKE1518†
Signal	Single	2.5	12	14	Cembre PKE2518†
Power	Twin	2x0.75	10	12	Cembre PKET7510
Power	Twin	2x0.75	10	12	AMP (non-preferred) 966144-5
Power	Twin	2x1.0	10	12	Phoenix Contact AI-TWIN 2X 1-10 RD
Power	Single	0.75	10	12	AMP 966067-0
Power	Single	1.0	10	12	Phoenix Contact AI 1-10 RD

† These ferrules with 18mm length metal tubes should be cut to 12mm after crimping

Note: Smaller section wire than that stated can often be successfully used if the crimping is good.

Crimp tool: Phoenix Contact Crimpfox UD6 part number 1204436

4.4.2 Safe-area - signal connections

Each module position is provided with a 6-way split-level terminal block for safe-area signals. The six terminals reproduce the module terminals numbered 7 to 12 as shown in Figure 4.9.

Figure 4.9: Terminal pin assignments

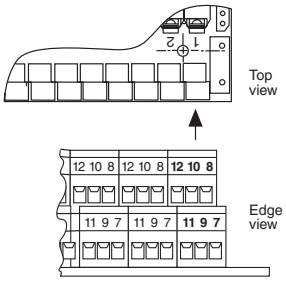

a) Make the appropriate connections to the terminal block in accordance with the pin assignment numbers reproduced in Figure 4.9.

b) Wire entry for each terminal is from the side of the block.

c) The maximum permissible wire gauge is 2.5mm² (14 AWG).

4.4.3 Safe area – power supply connections (8- and 16-way backplanes)

Dual-redundant 24V DC power supplies can be connected to each backplane using plug-in connectors. The supplies are connected in parallel, through diodes, and bussed by the backplanes to individual isolators. LEDs on the backplane will light to show that the two independent supplies are operational. The diodes between the two supplies means that the one with the higher voltage is used at any given moment, but provide automatic switchover of supplies if one source fails.

Figure 4.10: PSU connections 8- & 16-way

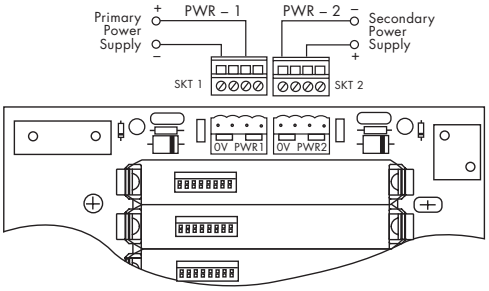

a) Connect each of the two 21V to 35V dc power supply connectors to the independent supply sources according to the terminal assignments shown in Figure 4.10. The maximum permissible wire size is 2.5mm² (14 AWG).

b) Plug the power supply connectors into the base connectors on the backplanes.

c) The fuses on the backplanes are rated as follows:-

8-way:	1A	(FUS1.0ATE5)	16-way:	2A	(FUS2.0ATE5)

4.4.4 Interconnecting power supplies for multiple 8- and 16-way backplanes

Power supplies for 8- and 16-way backplanes can be interconnected in the form of a ring. This can reduce wiring and also permits individual backplanes to be taken out of service without affecting supplies to the other backplanes.

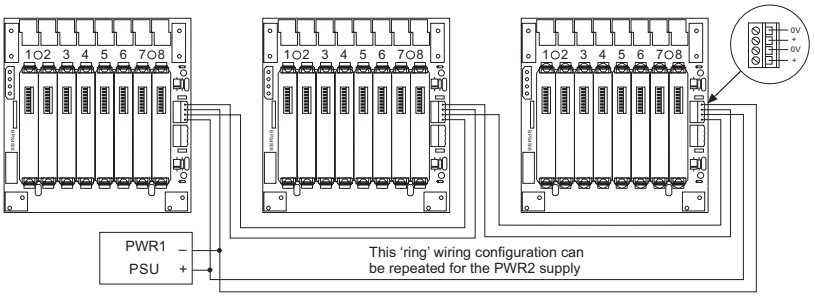

Figure 4.11: "Ring main" wiring for DC power

More than one backplane can be removed, provided that they are immediate neighbours and ensures that other backplanes are not left without an active supply. The connection method is shown in Figure 4.11.

Note: *a mixture of 8- and 16-way backplanes can be interconnected, provided that the maximum circuit current does not exceed 12A. Wire sizes up to 2.5mm² (14 AWG) can be used and should be chosen after calculating the voltage drop for the current load.*

4.4.5 Safe area – discrete power supply connections (24-way backplanes)

Dual-redundant 24V DC power supplies can be connected to each backplane using plug-in connectors. The supplies are connected in parallel, through diodes on the backplane, and bussed to individual isolators. LEDs on the backplane will light to show that the two independent supplies are operational. The diodes between the two supplies means that the one with the higher voltage is used at any given moment, but provide automatic switchover of supplies if one source fails.

Figure 4.12: PSU connections 24-way

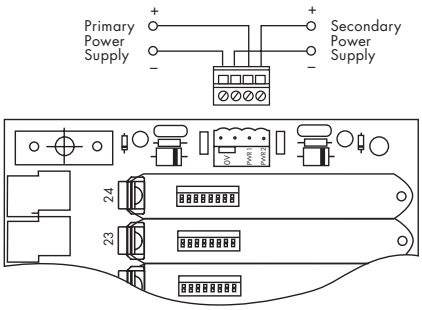

a) Connect the power supply cables to the connector according to the pin assignments shown in Figure 4.12. The maximum permissible wire size is 2.5mm² (14 AWG).

b) Plug the power supply connector into the base connector on the backplane.

c) The rating of the fuse is:– 24-way: 4.0A (FUS4.0ATE5 fuse kit)

4.5 Backplanes – customised

For information about installing customised backplanes (whether supplied by Eaton or by a third party), see the separate instructions provided with the units.

4.6 Backplanes - module clip replacement

Any broken module retaining clips must be replaced to maintain safe operation. Clips are constructed in moulded strips of four and are secured to the backplane with plastic rivets. Spare sets are available as part number SCK45 which contains 10 strips of four clips plus 40 rivets.

Figure 4.13: Module clips and rivets

4.6.1 Changing a damaged strip

a) Identify the strip of four clips that includes the damaged clip and remove the modules that are retained by that strip.

b) Using a small pointed tool, such as a small screwdriver, push out from the underside the four rivets securing the clips and remove the strip.

c) Fit a new strip of four clips and insert *new* rivets, pressing them in fully. Do not reuse the existing rivets as they will be deformed by previous use.

5 INSTALLATION – MODULES

IMPORTANT

- Work should be carried out in accordance with all relevant local standards, codes of practice and site regulations.
- Check that the hazardous-area equipment complies with the descriptive system document.
- Refer to the certificate/catalogue for clarification of any aspects of intrinsic safety or contact Eaton's MTL product line or your local representative for assistance.
- Make sure the correct hazardous-area connector (field-wiring plug) is plugged into the corresponding isolator. It is recommended that the connector is identified by the same tag number as the matching isolator.

5.1 Modules – pre-installation

5.1.1 Switch settings for operating conditions

Some modules have operating conditions, such as Line-Fault Detection (LFD), Phase Reversal, etc., that can be established by the setting of switches on the unit. The subminiature switches are accessible through an aperture on the side of the module (see Figure 5.1) and can be set in the required positions with, for example, the blade of a small screwdriver.

Figure 5.1: Location of switches

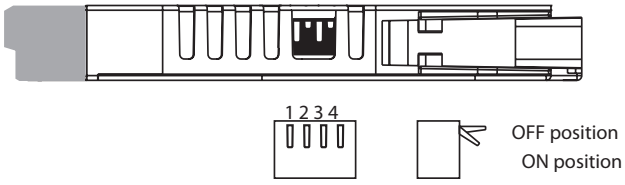

The switch setting options are always indicated on the side label of the module, but the user may also consult the individual module information in Section 6 of this manual for details.

5.1.2 Relay outputs

Reactive loads on all units with relays should be adequately suppressed. To achieve maximum contact life on all *mechanical* output relays, the load should not be less than 50mW, e.g. 10mA at ≥ 5V DC.

5.1.3 Ambient temperature considerations

The MTL4500 range of isolators are rated for an ambient operating temperature range of –20°C to +60° even when they are mounted (close-packed) on a backplane, except where otherwise noted.

5.1.4 Module and backplane orientation

The orientation of the backplane will have an influence on the amount of air flow through and around the modules, so this must be considered if this operating temperature range is to be maintained. There are two main orientations for the backplanes, as shown in Figure 5.2. Although orientation b), where the modules are aligned in a vertical plane, is the optimum for heat transfer, orientation a), where the modules are horizontal, is the most frequent because it is probably the most convenient for cabling.

5.1.5 Cabinet and enclosure mounting

The backplanes are normally mounted with other equipment in an enclosure or wiring cabinet, so particular consideration must be given to the management of the internal temperature and the need to remove heat from around the modules. Space around the modules is essential for the free movement of air and adequate ventilation is required for its removal.

The larger the source of heat, the higher it should be mounted in the cabinet, this is in order to avoid the creation of an undesirable temperature gradient from the bottom of the cabinet to the top.

Principal sources of heat in such circumstances are ac/dc power supplies for the internal equipment. These should certainly be located at the top of the cabinet to limit the effect of their dissipated heat.

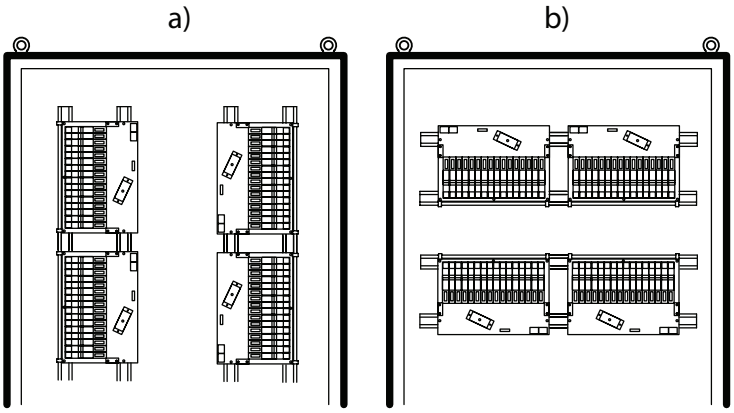

Figure 5.2: Backplane orientations when mounted in cabinets

Clearly, the temperature of the air surrounding the cabinet must also be considered. In a control room environment with control and maintenance staff present, this should be reasonably well defined, but other locations may require additional shielding to reduce the exposure to excess heat or cold.

Ventilation for modest amounts of dissipation can be achieved by natural convection but, for larger sources of heat, forced movement of air with fans is normally required. If orientation a) (see diagram) is used, then forced ventilation is recommended to ensure adequate air movement around the modules.

The cabinet manufacturer should be approached for best advice on how much ventilation can be achieved by natural convection, or else on the quantity of fans required for forced cooling. Table 5.1 shows some typical figures for the permitted power dissipation in a cabinet 2200mm high x 600mm wide x 500mm deep, with front and rear doors. This should only be taken as a rough guide and appropriate calculations should be carried out to assess the true figures.

Air flow requirements	Natural convection	Forced 250m³/hour	Forced 500m³/hour	Forced 1000m³/hour
Watts per cabinet @ 25°C	300	420	550	600
Watts per cabinet @ 35°C	260	350	450	470

Table 5.1: Typical air flow volumes in cabinet

5.2 Modules – installation

5.2.1 Signal conductors

The removable, field-device, signal connectors are located on the front of the module. They are fitted with screw clamp terminals and mechanically keyed to fit only in the correct position. Note that the conductors should be between 14 and 24 AWG (1.6 and 0.5mm dia) in size.

5.2.2 Electrical connections

See Figure 5.3 and also Section 4.4.1 on page 8for details on choosing ferrules.

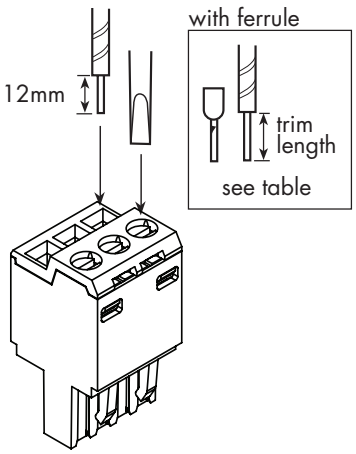

Figure 5.3:
Hazardous-area connector (blue)
Non-hazardous area connector (grey)

a) Trim back the insulation for solid conductors by 12mm (or to the length shown in the table on page 8 when fitting a ferrule for stranded wire).

b) Check the module terminal assignments - shown in section 6 or on the side label of the unit.

c) Insert conductors according to the terminal assignments and tighten screws. Torque range 0.4Nm to 0.6Nm.

Note: Smaller section wire than that stated can be used successfully if care is taken to ensure that the wire is properly secured after crimping the ferrule.

5.2.3 Finishing

Connect individual isolators in accordance with wiring schedules.

Ensure hazardous- and safe-area wiring is segregated into separate trunking or looms and maintain a tidy installation.

Use an MTL4599 dummy isolator to provide termination and earthing for unused cores from the hazardous area.

5.2.4 Module mounting and removal

Check for the correct orientation of the module then locate it between the latching clips. Press the module straight onto the backplane. See Figure 5.4.

To remove the module, unclip the latch nearest the CE mark shown on the module label and rotate the module away from this latch. When the module is unplugged from the power connector, move the module clear of the other latch and remove it. See Figure 5.5.

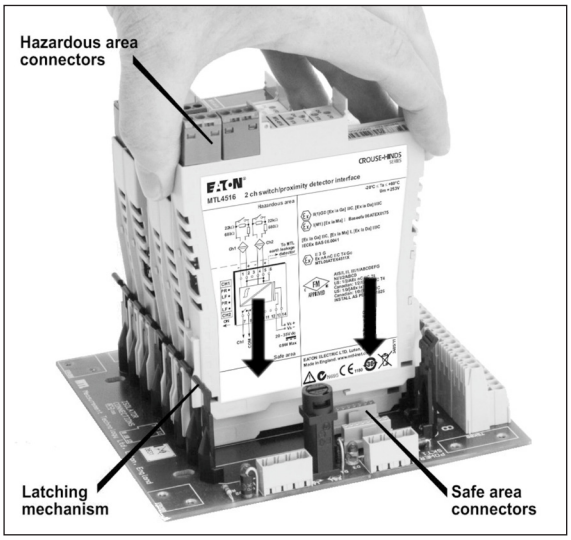

Figure 5.4: Mounting a module onto a backplane

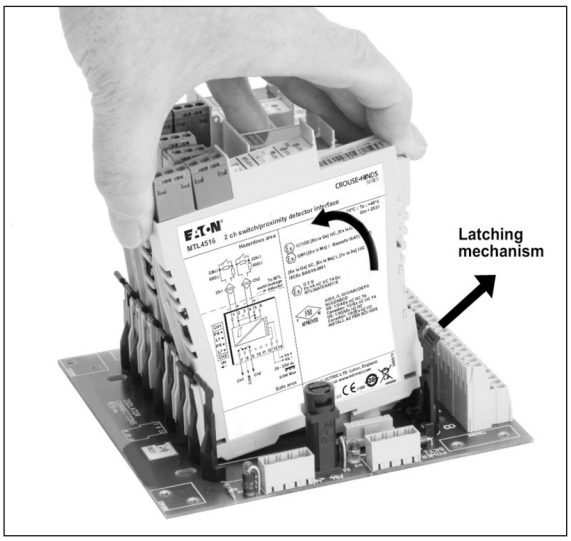

Figure 5.5: Removing a module from a backplane

6 UNIT DESCRIPTIONS, SETTING-UP AND CONNECTIONS

This section describes the function (briefly), the setting-up procedure and the wiring connections for each MTL4500 range of unit. For a fuller functional description and a detailed technical specification, refer to the individual datasheets, which can be found on our website at *http://www.mtl-inst.com* or in the current MTL IS catalogue.

If a fault is suspected, first check that the power LED is lit (not applicable to loop-powered devices). If necessary, check that all signal and power plugs are properly inserted, that no wires are loose and that the unit is mounted correctly. If operation is still suspect, the unit should be replaced with a servicable unit.

There are no replaceable parts inside the MTL4500 range of units, so any that appear to be inoperative should be returned to the manufacturer/supplier for repair or replacement.

WARNING !
MTL4500 range

When disconnecting units for maintenance purposes, take care to segregate hazardous and safe-area cables.

- Short circuit hazardous-area cable cores to an IS earth or insulate and secure the ends.
- Insulate and secure safe-area cables.

If testing a unit 'in situ' note that the test equipment used MUST be intrinsically safe.

The rest of this section is divided into sub-sections based upon the following module types.

6.1 Digital Input modules
MTL4501-SR, MTL4504, MTL4510, MTL4510B, MTL4511, MTL4513, MTL4514, MTL4514B, MTL4514D, MTL4514N, MTL4516, MTL4516C, MTL4517

6.2 Digital Output modules
MTL4521, MTL4521L, MTL4521Y, MTL4523, MTL4523Y, MTL4523L, MTL4523R, MTL4523V, MTL4523VL, MTL4524, MTL4524S, MTL4525, MTL4526

6-3 Pulse and Vibration modules
MTL4531, MTL4532, MTL4533

6.4 Analogue Input modules
MTL4541, MTL4541A, MTL4541AS, MTL4541B, MTL4541P, MTL4541S, MTL4541T, MTL4541YA, MTL4541Y, MTL4544, MTL4544A, MTL4544AS, MTL4544B, MTL4544D, MTL4544S

6.5 Analogue Output modules
MTL4545Y, MTL4546, MTL4546C, MTL4546S, MTL4546Y, MTL4549, MTL4549C, MTL4549Y

6-6 Fire and Smoke Interface modules
MTL4561

6.7 Temperature Input modules
MTL4573, MTL4573Y, MTL4575, MTL4576-RTD, MTL4576-THC, MTL4581

6.8 General modules
MTL4599, MTL4599N

6.9 PCS45/PCL45USB configurator for MTL temperature converters

Note: Any LED indicators provided on the modules will display in the following colours:

LED label	LED colour
PWR (power)	Green
STS (status)	Yellow
LFD (line fault)	Red
FLT (fault)	Red
OPx (o/p status)	Yellow

6.1 Digital Input modules

The Digital Input (DI) module range offers solid state or relay output switches in a safe area that respond to input switches located in a hazardous area. Single or multiple channel (2 or 4) options are available, as well as **Line-Fault Detection** (LFD).

Modules with LFD can recognise open or short circuit conditions on the input wires going to the field sensors, and some DI modules have the facility to reverse the effect of the input on the output i.e. **phase reversal**.

These options are chosen with switches located on the edge of the module on the hazardous area terminal side. In some applications it may be easier to set these switches *before* fitting the module to the backplane.

Figure 6.1: Switches to set LFD and phase reversal

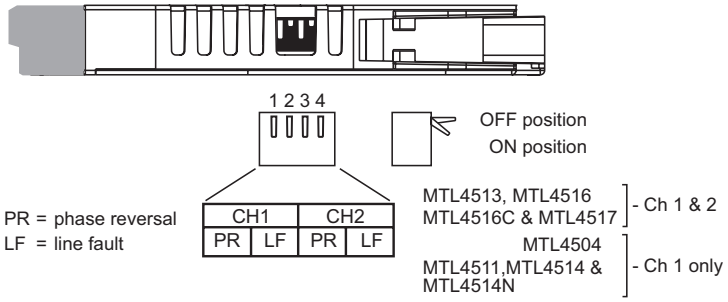

6.1.1 Phase reversal

Set the PR switch ON or OFF for the appropriate channel(s).

6.1.2 Line-Fault Detection (LFD)

Where fitted, set the LF switch ON or OFF for the appropriate channel(s). **Note**: LFD is permanently active on the MTL4501-SR.

For all DI modules with LFD **except for the MTL4501-SR**; when using the LFD facility with a contact input, resistors must be used. Fit 500Ω to 1kΩ (preferred value 680Ω) in series with the switch and 20kΩ to 25kΩ (preferred value 22kΩ) in parallel with the switch.

For modes of operation of the MTL4510 & MTL4510B that include LFD, resistors should be fitted as described above.

For MTL4501-SR use 1k4Ω in series and 10kΩ in parallel with switch contact inputs.

For hazardous-area inputs conforming to EN 60947-5-6:2001 (NAMUR), a line fault is judged by the following rules:

- Open circuit condition if hazardous-area current <50μA
- Line integrity (no open circuit) if hazardous-area current >250μA
- Short circuit condition if hazardous-area load <100Ω
- Line integrity (no short circuit) if hazardous-area load >360Ω

Note: the open circuit window (between 250μA and 50μA), and the short circuit window (between 100Ω and 360Ω), is not hysteresis. All MTL4500 range of modules, with inputs conforming to EN 60947-5-6:2001 (NAMUR), will switch between open and complete circuit conditions within these limits.

The MTL4501-SR, MTL4514N and the MTL4504 LFD relays *de-energise* when a fault condition is detected. The MTL4514 and the MTL4517 *energise* the LFD relay to indicate a fault condition.

6.1.3 MTL4501-SR - Fail-safe Switch/Proximity detector interface

Single channel, fail-safe module with line-fault detection

The MTL4501-SR enables a fail-safe switch/proximity detector located in the hazardous area to control an isolated fail-safe electronic output. It provides line-fault detection (LFD) alarm contacts and is designed for use with approved fail-safe sensors in loops that require operation up to SIL3 according to the functional safety standard IEC 61508.

Note: For reliable, long-term operation the load on the LFD switching relay should not be less than 50mW, e.g. 10mA at 5V DC.

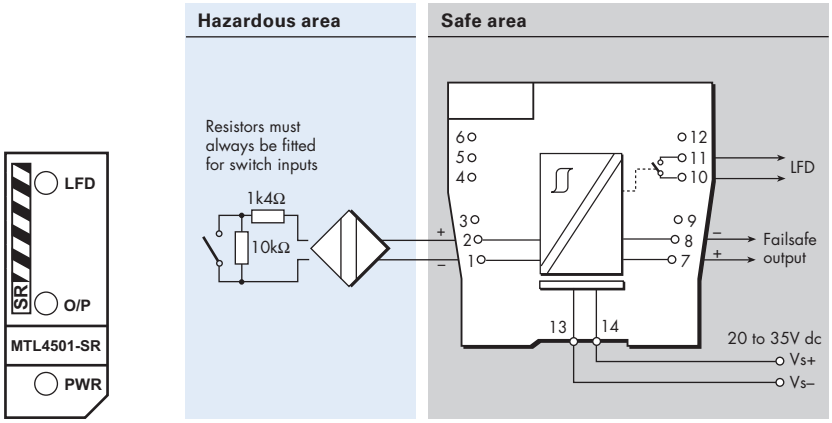

Figure 6.2: Top label for MTL4501-SR

Terminal	Function
1	Input –ve
2	Input +ve
7	Output +ve
8	Output –ve
10	LFD
11	LFD
13	Supply –ve
14	Supply +ve

Input / output characteristics

Input value in sensor circuits	Fail–safe output	Operation	LFD contacts
2.9mA < Is < 3.9mA	ON	Normal	CLOSED
Is < 1.9mA & Is > 5.1mA	OFF	Normal	CLOSED
Is < 50µA	OFF	Broken line	OPEN
Rs < 100Ω	OFF	Shorted line	OPEN

Correct operation of the fail-safe output and LFD is indicated by the LEDs on the front of the unit. The yellow **O/P** LED is ON when the fail-safe output is energised. The red **LFD** LED flashes if a line fault is detected. The fail-safe output is de-energised (OFF) if the module detects an incorrect sensor current, an open circuit or a short circuit in the sensor circuit.

Input signal sensors may be either suitable proximity sensors or switches. The proximity sensor properties are specified in the standard EN60947-5-6:2001; however, when used with MTL4501-SR modules, additional requirements for the "low-impedance" current of 3.4±0.5mA must be met. The list below shows suitable proximity sensors, all manufactured by Pepperl+Fuchs Group, Germany, and specified as usable to SIL3, according to IEC 61508:

SJ 2-SN	NJ 4-12GK-SN	NJ 10-30GK-SN
SJ 3,5-SN	NJ 5-18GK-SN	NJ 15-30GK-SN
SJ 3,5-S1N	NJ 8-18GK-SN	NJ 6S1+U1+N
NJ 2-11-SN	NJ 6-22-SN	NJ 15S+U1+N
NJ 2-11-SN-G	NJ 6-22-SN-G	NJ 20S+U1+N
NJ 2-12GK-SN	NJ 5-30GK-S1N	NJ 40-FP-SN-P1

6.1.4 MTL4504 - Switch/Proximity detector interface

Single-channel, with LFD and phase reversal

The MTL4504 enables a safe–area load to be controlled, through a relay, by a proximity detector or switch located in a hazardous area. Line faults are signalled through a separate relay and indicated on the top of the module. MTBF information for the LFD relay is available from Eaton to allow the failure rate for the LFD relay to be calculated when used in the critical path with the output relay for safety critical applications. Switches are provided to select phase reversal and to enable the line fault detection.

Note that series and parallel resistors are required for switch inputs with LFD - see Section 6.1.2 for recommended values.

Note: For reliable, long-term operation the load on the output switching relays should not be less than 50mW, e.g.10mA at 5VDC.

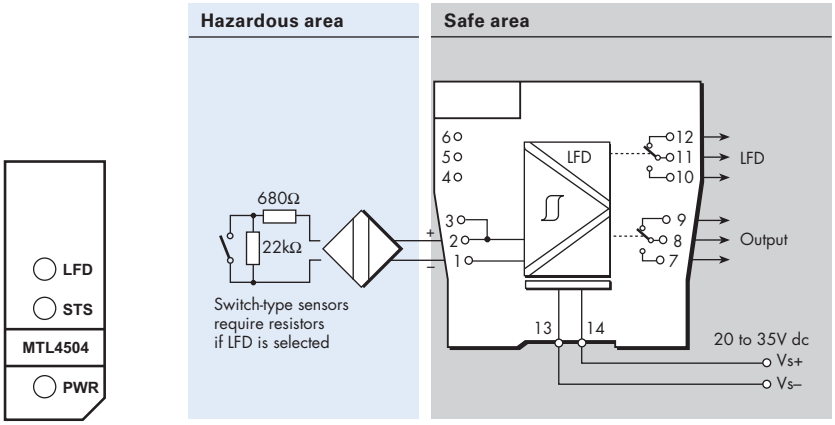

Figure 6.3: Top label for MTL4504

Terminal	Function
1	Input –ve
2	Input +ve
3	To earth leakage detector*
7	Normally-open contact (output)
8	Common (output)
9	Normally-closed contact (output)
10	Normally-open contact (LFD)
11	Common (LFD)
12	Normally-closed contact (LFD)
13	Supply – ve
14	Supply +ve

6.1.5 MTL4510 & MTL4510B - Switch/Proximity detector interface

4-channel, digital input and multifunction modules

These digital modules provide solid state output switches in a safe area that respond to switches (inputs) located in a hazardous area. The way they respond - their "mode" - can be configured using a bank of four DIL selector switches accessible through the side of the module - see Figure 6.5.

Model MTL4510 has an one output channel for each input channel and the user can reverse the output phase if necessary to suit the application. Model MTL4510B has more varied modes that can, for example, enable one input to affect multiple outputs or create latched outputs, etc. The channel output transistors - Ch1/Ch2 and Ch3/Ch4 - share a common terminal and can switch +ve or –ve polarity signals.

Note that series and parallel resistors are required for switch inputs with LFD - see Section 6.1.2 for recommended values.

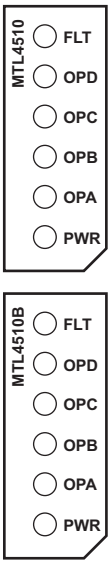

Figure 6.4 Top labels for MTL4510 & MTL4510B

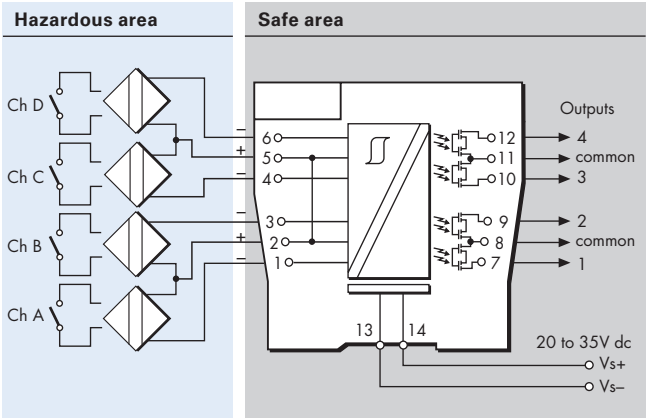

Terminal	Function
1	Input channel A
2	Input channel AB common (+)
3	Input channel B
4	Input channel C
5	Input channel CD common (+)
6	Input channel D
7	Output channel 1
8	Output channel 1/2 common
9	Output channel 2
10	Output channel 3
11	Output channel 3/4 common
12	Output channel 4
13	Supply –ve
14	Supply +ve

Figure 6.5: DIL switches for setting MODE

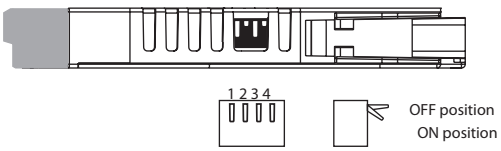

Tables 6.1 and 6.2 show details of the modes available and the switch settings required to obtain them.For ease of access, it is recommended that switches are set to the required mode *before* installation.Table 6.1 indicates whether the output follows the input, or the output is the reverse or antiphase of the input.

For example, in mode 0, o/p 1 = chA; so, if channel A switch is closed, then output 1 will also be closed or short circuit. However, in mode 1, o/p 1 = chA rev., so if channel A switch is closed, then output 1 will be the reverse, i.e. open-circuit.

Table 6 .1 - MTL4510 mode options

Switch setting				MODE	o/p 1	o/p 2	o/p 3	o/p 4	i/p type
1	2	3	4						
OFF	OFF	OFF	OFF	0	chA	chB	chC	chD	switch
ON	OFF	OFF	OFF	1	chA rev.	chB	chC	chD	
OFF	**ON**	OFF	OFF	2	chA	chB rev.	chC	chD	
ON	**ON**	OFF	OFF	3	chA	chB	chC rev.	chD	
OFF	OFF	**ON**	OFF	4	chA	chB	chC	chD rev.	
ON	OFF	**ON**	OFF	5	chA rev.	chB	chC rev.	chD	
OFF	**ON**	**ON**	OFF	6	chA	chB rev.	chC	chD rev.	
ON	**ON**	**ON**	OFF	7	chA rev.	chB rev.	chC rev.	chD rev.	
OFF	OFF	OFF	**ON**	8	chA	chB	chC	chD	prox. detector + LFD
ON	OFF	OFF	**ON**	9	chA rev.	chB	chC	chD	
OFF	**ON**	OFF	**ON**	10	chA	chB rev.	chC	chD	
ON	**ON**	OFF	**ON**	11	chA	chB	chC rev.	chD	
OFF	OFF	**ON**	**ON**	12	chA	chB	chC	chD rev.	
ON	OFF	**ON**	**ON**	13	chA rev.	chB	chC rev.	chD	
OFF	**ON**	**ON**	**ON**	14	chA	chB rev.	chC	chD rev.	
ON	**ON**	**ON**	**ON**	15	chA rev.	chB rev.	chC rev.	chD rev.	

Table 6.2 shows the **MTL4510B** modes. The logic tables and timing diagrams on the following pages provide more detailed information on these modes.

Table 6.2 - MTL4510B mode options

Switch settings				MODE	Function	Equivalent
1	2	3	4			
OFF	OFF	OFF	OFF	0	4-ch switch input (see MTL4510 mode 0)	MTL4510
ON	OFF	OFF	OFF	1	2-ch each channel one input, two outputs	MTL4016
OFF	**ON**	OFF	OFF	2*	Same as mode 1 with all outputs phase reversed	MTL4016
ON	**ON**	OFF	OFF	3	2-ch, 2-pole changeover output	
OFF	OFF	**ON**	OFF	4	1-ch with line fault output	MTL4014
ON	OFF	**ON**	OFF	5	As mode 4 with changeover outputs	
OFF	**ON**	**ON**	OFF	6	1-ch with start-stop latch	MTL2210B
ON	**ON**	**ON**	OFF	7*	As mode 2 with LFD enabled	MTL4016
OFF	OFF	OFF	**ON**	8	4-ch switch input, see MTL4510 mode 8	MTL4510
ON	OFF	OFF	**ON**	9	2-ch with line fault output	MTL4017
OFF	**ON**	OFF	**ON**	10	As mode 9 with LFD changeover	
ON	**ON**	OFF	**ON**	11	As mode 10 with channel phase reversed	
OFF	OFF	**ON**	**ON**	12	3-ch with normally-open LFD output	
ON	OFF	**ON**	**ON**	13	3-ch with normally-closed LFD output	
OFF	**ON**	**ON**	**ON**	14	2-ch monostable, pulse stretcher	
ON	**ON**	**ON**	**ON**	15	4-ch switch input, see MTL4510 mode 15	MTL4510

*Mode of operation changed August 2015

MTL4510 & MTL4510B diagnostics

If an internal fault is detected, all outputs and channel LEDs will turn off and the red Fault LED will turn ON.

MTL4510B modes

The following logic and timing diagrams are provided to assist the user in understanding the behaviour of the MTL4510B module when a specific **mode** is chosen.

The open switch (-o/ o-) and closed switch (-o-o-) symbols are used to represent both the input conditions of Ch A, Ch B, Ch C or Ch D and then the output conditions of o/p 1, 2, 3 or 4. Note that in certain modes a Line Fault can cause an override of the output.

Mode 1: 2 ch, each ch 1 input 2 outputs

	i/p - Ch A	
o/p 1		
	-	-
o/p 3		
	-	-

	i/p - Ch C	
	-	-
o/p 2		
	-	-
o/p 4		

How to use these mode tables - examples

The logic tables for Mode 1 represent Ch A controlling outputs 1 & 3, while Ch C controls outputs 2 & 4.

Output 1 & 3 are shown following input Ch A (open or closed) while Outputs 2 & 4 follow input Ch C.

Mode 2 however shows o/p 1, 2, 3 and 4 being in antiphase to their inputs.

Mode 9 operates with both outputs for each channel being in antiphase to their inputs.

Mode 2: As mode 1 with all outputs phase reversed

	i/p - Ch A	
o/p 1		
	-	-
o/p 3		
	-	-

	i/p - Ch C	
	-	-
o/p 2		
	-	-
o/p 4		

Mode 3: 2 ch, 2 pole c/o output

	i/p - Ch A	
o/p 1		
o/p 2		
	-	-
	-	-

	i/p - Ch C	
	-	-
	-	-
o/p 3		
o/p 4		

Mode 4: 1 ch with line fault output

	i/p - Ch A			
	No fault	**Line fault**	No fault	**Line fault**
o/p 1				

	No fault	**Line fault**	No fault	**Line fault**
o/p 3				

Mode 5: As mode 4 with c/o outputs

	i/p - Ch A			
	No fault	**Line fault**	No fault	**Line fault**
o/p 1				
o/p 2				

	No fault	**Line fault**	No fault	**Line fault**
LFD o/p 3				
LFD o/p 4				

Mode 6: 1 ch with start/stop latch

i/p Ch C	Non-latching	
i/p Ch B	Enable	
i/p Ch A		
o/p 1		
o/p 2		
o/p 3		
o/p 4		

— OR —

i/p Ch C	Latching		
i/p Ch A		Start	Reset
i/p Ch B	No effect	Stop	
o/p 1			
o/p 2			
o/p 3			
o/p 4			

Mode 7: As mode 2 with LFD enabled

	i/p - Ch A			
	No fault	**Line fault**	No fault	**Line fault**
o/p 1				
o/p 3				

	i/p - Ch C			
o/p 2				
o/p 4				

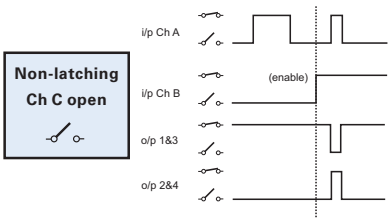

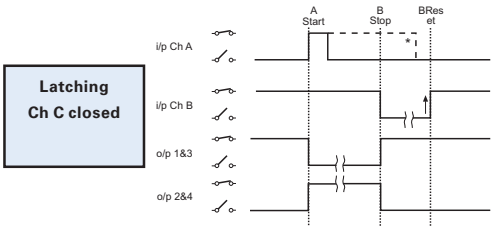

* i/p Ch A can be open or closed when i/p Ch B opens to stop latch

MTL4510B modes - continued

Mode 9: 2 ch with line fault output

	i/p - Ch A			
	No fault	**Line fault**	No fault	**Line fault**
o/p 1				

	i/p - Ch C			
	No fault	**Line fault**	No fault	**Line fault**
o/p 2				

	No fault	**Line fault**	No fault	**Line fault**
LFD o/p 3				

Mode 10: As mode 9 with line fault c/o

	i/p - Ch A			
	No fault	**Line fault**	No fault	**Line fault**
o/p 1				

	i/p - Ch C			
	No fault	**Line fault**	No fault	**Line fault**
o/p 2				

	No fault	**Line fault**	No fault	**Line fault**
LFD o/p 3				
LFD o/p 4				

Mode 11: As mode 10 with ch phase reversed

	i/p - Ch A			
	No fault	**Line fault**	No fault	**Line fault**
o/p 1				

	i/p - Ch C			
	No fault	**Line fault**	No fault	**Line fault**
o/p 2				

	No fault	**Line fault**	No fault	**Line fault**
LFD o/p 3				
LFD o/p 4				

Mode 12: 3 ch with common LFD output

	i/p - Ch A			
	No fault	**Line fault**	No fault	**Line fault**
o/p 1				

	i/p - Ch B			
	No fault	**Line fault**	No fault	**Line fault**
o/p 2				

	i/p - Ch C			
	No fault	**Line fault**	No fault	**Line fault**
o/p 3				

	No fault	**Line fault**	No fault	**Line fault**
LFD o/p 4				

Mode 13: As mode 12 but with LFD o/p 4 reversed

	No fault	**Line fault**	No fault	**Line fault**
LFD o/p 4				

Mode 14

This mode provides a two channel pulse stretcher for inputs A and C. Outputs 1 and 2 respond to Ch A, while 3 and 4 respond to Ch C.
Input B (or D) being open or closed affects the input transition and the output polarity as shown in the timing diagrams below.
When triggered by A (or C) the outputs hold the change of state for a minimum of 1 second or as long as the input (A or C) remains in the same triggered state.

Input Ch B (or D) closed

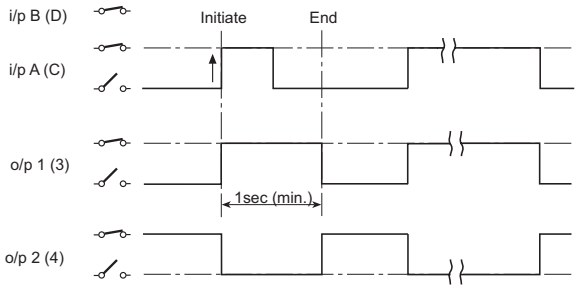

Input Ch B (or D) open

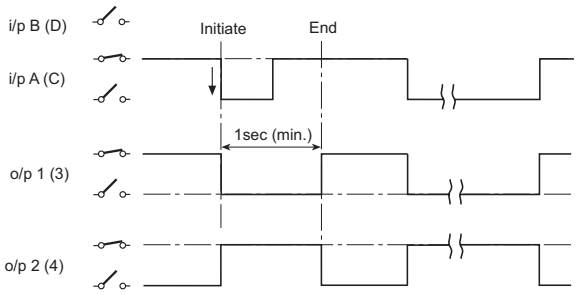

6.1.6 MTL4511 - Switch/Proximity detector interface

Single channel, with line-fault detection

The MTL4511 contains a changeover relay, which enables a safe-area load to be controlled by a switch or proximity detector located in a hazardous-area. When selected, the line-fault detect (LFD) facility detects open or short circuit conditions in the field wiring and also indicates this on the top of the module. **Line-Fault Detect** and **Phase Reversal** for the channel are selected by DIL switches on the side of the module and output is provided by the changeover relay contacts.

See page 15 for LFD and PR switch details. **Channel 1 only** switch settings apply.

For switch sensor inputs, with LFD selected, make sure resistors (22kΩ and 680Ω) are fitted.

Note: For reliable, long-term operation the load on the output switching relay should not be less than 50mW, e.g.10mA at 5VDC.

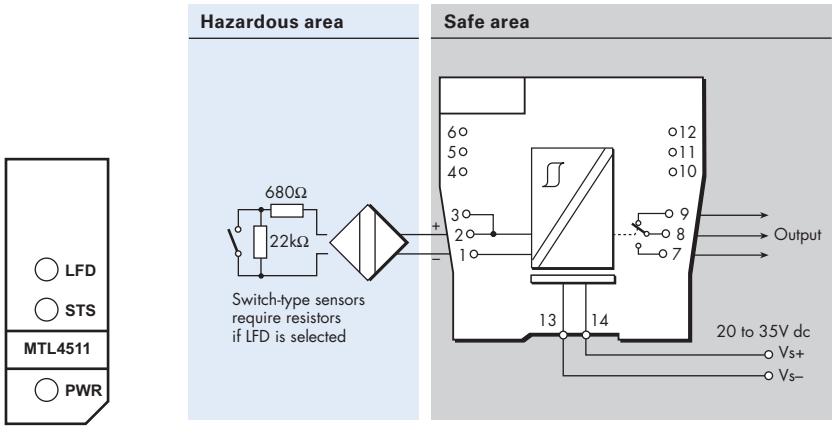

Figure 6.6: Top label for MTL4511

Terminal	Function
1	Input –ve
2	Input +ve
3	To earth leakage detector*
7	Output normally-open contact
8	Common
9	Output normally-closed contact
13	Supply –ve
14	Supply +ve

6.1.7 MTL4513 - Switch/Proximity detector interface

Two-channel, with line-fault detection and phase reversal

The MTL4513 enables two solid-state outputs in the safe area to be controlled by two switches or proximity detectors located in the hazardous area. The Ch1/Ch2 output transistors share a common terminal and can switch +ve or –ve polarity signals. **Line-Fault Detect** and **Phase Reversal** for the channel are selected by DIL switches on the side of the module. LFD indication is provided on the top of the module.

See page 15 for LFD and PR switch details. **Channel 1 & 2** switch settings apply.

For switch sensor inputs, with LFD selected, make sure resistors (22kΩ and 680Ω) are fitted.

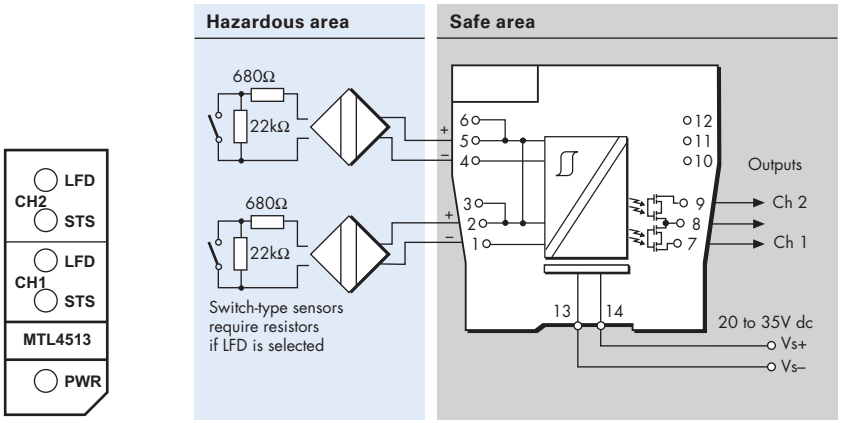

Figure 6.7: Top label for MTL4513

Terminal	Function
1	Input –ve (Ch 1)
2	Input +ve (Ch 1)
3	To earth leakage detector*
4	Input –ve (Ch 2)
5	Input +ve (Ch 2)
6	To earth leakage detector*
7	Output (Ch 1)
8	Output (Ch 1/Ch 2)
9	Output (Ch 2)
13	Supply –ve
14	Supply +ve

6.1.8 MTL4514/MTL4514B/MTL4514D - Switch/Proximity detector interface

Single channel, with line-fault detection and phase reversal

The MTL4514 and MTL4514B enables a safe-area load to be controlled, through a relay, by a proximity detector or switch located in a hazardous area. Line faults are signalled through a separate relay and indicated on the top of the module. The MTL4514D enables two safe-area loads to be controlled by a single hazardous area proximity detector or switch, with line faults indicated on the top of the module. **Line-Fault Detect** and **Phase Reversal** for the channel are selected by DIL switches on the side of the module. Output is provided by ***changeover*** relay contacts in the MTL4514 and ***single-pole*** relay contacts in the MTL4514B and MTL4514D.

See page 15 for LFD and PR switch details. **Channel 1 only** switch settings apply.

For switch sensor inputs, with LFD selected, make sure resistors (22kΩ and 680Ω) are fitted.

Note: For reliable, long-term operation the load on the output switching relays should not be less than 50mW, e.g.10mA at 5VDC.

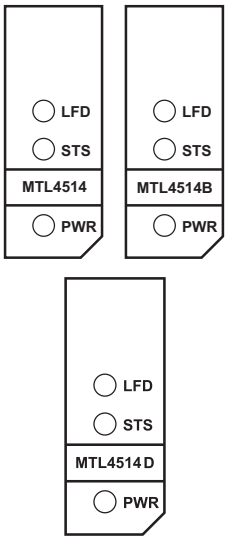

Figure 6.8: Top labels for MTL4514, MTL4514B & MTL4514D

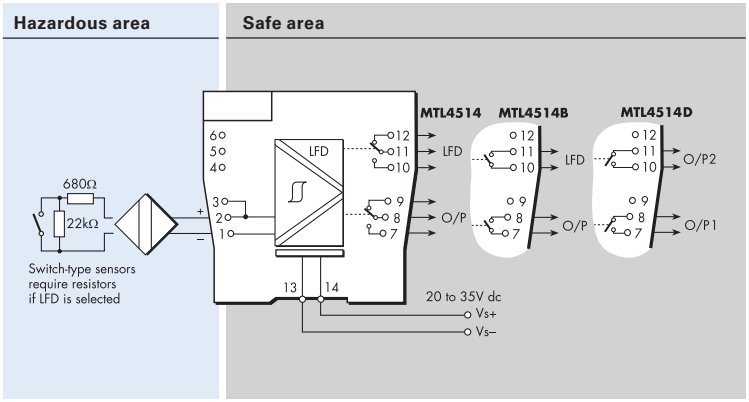

Terminal	Function		
	MTL4514	MTL4514B	MTL4514D
1		Input –ve	
2		Input +ve	
7	Output contact N.O.	Output contact N.O.	Output 1 contact N.O.
8	Output common	Output contact N.O.	Output 1 contact N.O.
9	Output contact N.C.	–	–
10	LFD contact N.O.	LFD contact N.O.	Output 2 contact N.O.
11	LFD common	LFD contact N.O.	Output 2 contact N.O.
12	LFD contact N.C.	–	–
13		Supply – ve	
14		Supply +ve	

N.O. = normally open N.C. = normally closed

6.1.9 MTL4514N - Switch/Proximity detector interface

Single channel, with line-fault detection with passthrough and phase reversal

The MTL4514N is designed to work with system inputs which monitor the impedance of the field circuit in order to detect line faults. Low and high impedance states reflect a switch closed or open in the field. An open circuit state is used to signal a line fault.

There are 2 relays and resistors provided, the main channel relay switches the 2k2 resistor across the system input. The LFD relay switches a 15k resistor in parallel with the 2k2. When a line fault is detected the main relay is open and the LFD relay is open thus providing an open circuit condition on the system input.

A custom backplane designed for the MTL4514N must be used or, if a general purpose backplane is used, the module outputs must be wired in parallel (terminals 8-10 and 9-11 linked). Switch contacts in the field must be fitted with end of line resistors if LFD passthough is required.

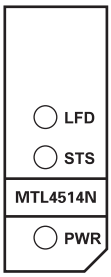

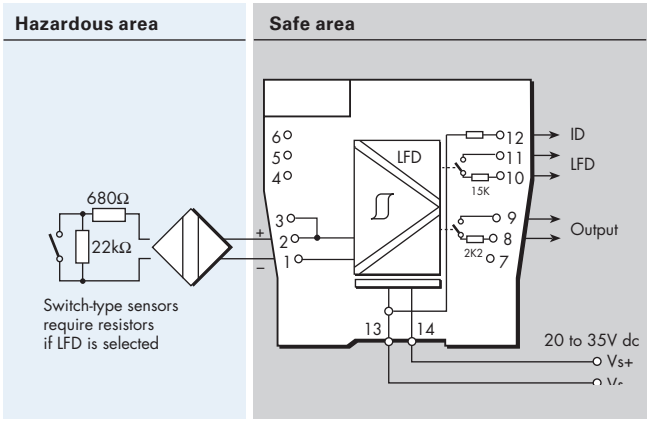

Figure 6.9: Top label for MTL4514N

Terminal	Function
1	Input –ve
2	Input +ve
8	Output N.O.
9	Output Common
10	LFD N.O.
11	LFD Common
12	ID resistor

6.1.10 MTL4516 - Switch/Proximity detector interface

Two channel, with line-fault detection and phase reversal - normally-open contacts

The MTL4516 contains two normally-open contact relays, which enable two safe-area loads to be controlled by switches or proximity detectors located in a hazardous-area. When selected, the line-fault detect (LFD) facility detects open or short circuit conditions in the field wiring and also indicates this on the top of the module. **Line-Fault Detect** and **Phase Reversal** for the channel are selected by DIL switches on the side of the module and output is provided by the changeover relay contacts.

See page 15 for LFD and PR switch details. **Channel 1 & 2** switch settings apply.

For switch sensor inputs, with LFD selected, make sure resistors (22kΩ and 680Ω) are fitted.

Note: For reliable, long-term operation the load on the output switching relays should not be less than 50mW, e.g.10mA at 5VDC.

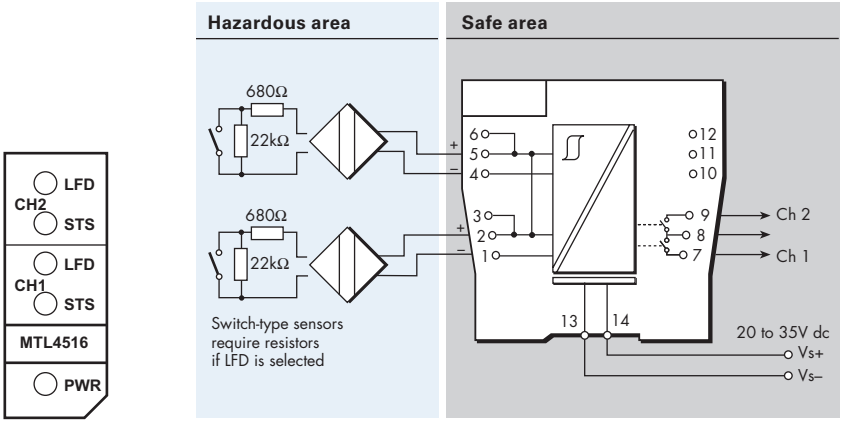

Figure 6.10: Top label for MTL4516

Terminal	Function
1	Input –ve (Ch 1)
2	Input +ve (Ch 1)
4	Input –ve (Ch 2)
5	Input +ve (Ch 2)
7	Output (Ch 1)
8	Common (Ch 1/Ch 2)
9	Output (Ch 2)
13	Supply –ve
14	Supply +ve

6.1.11 MTL4516C - Switch/Proximity detector interface

Two channel, with line-fault detection and phase reversal - changeover contacts

The MTL4516C contains two changeover relays, which enable two safe-area loads to be controlled by switches or proximity detectors located in a hazardous-area. When selected, the line-fault detect (LFD) facility detects open or short circuit conditions in the field wiring and also indicates this on the top of the module. **Line-Fault Detect** and **Phase Reversal** for the channel are selected by DIL switches on the side of the module and output is provided by the changeover relay contacts.

See page 15 for LFD and PR switch details. **Channel 1 & 2** switch settings apply..

For switch sensor inputs, with LFD selected, make sure resistors (22kΩ and 680Ω) are fitted.

Note: For reliable, long-term operation the load on the output switching relays should not be less than 50mW, e.g.10mA at 5VDC.

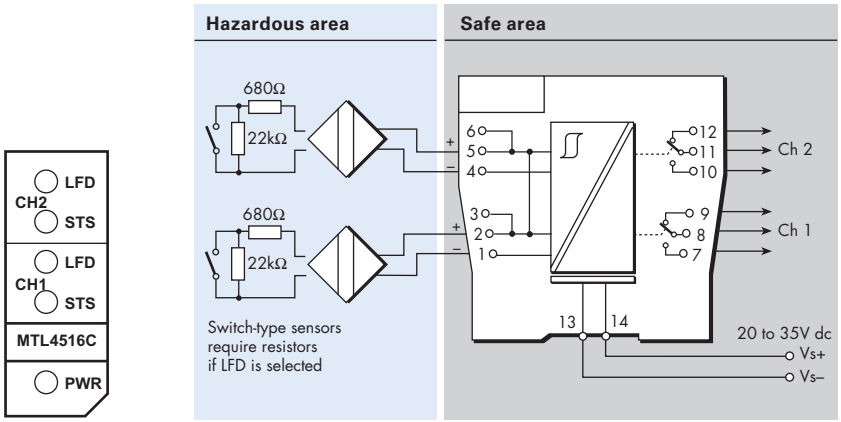

Figure 6.11: Top label for MTL4516C

Terminal	Funct ion
1	Input –ve (Ch 1)
2	Input +ve (Ch 1)
4	Input –ve (Ch 2)
5	Input +ve (Ch 2)
7	Normally-open contact (Ch 1)
8	Common (Ch 1)
9	Normally-closed contact (Ch 1)
10	Normally-open contact (Ch 2)
11	Common (Ch 2)
12	Normally-closed contact (Ch 2)
13	Supply –ve
14	Supply +ve

6.1.12 MTL4517 - Switch/Proximity detector interface

Two channel, with line-fault detection and phase reversal

The MTL4517 enables two safe-area loads to be controlled, through a relay, by switches or proximity detectors located in a hazardous-area. When selected, the line-fault detect (LFD) is signalled through a separate relay and indicated on the top of the module. **Line-Fault Detect** and **Phase Reversal** for the channel are selected by DIL switches on the side of the module and output is provided by the relay contacts.

See page 15 for LFD and PR switch details. **Channel 1 & 2** switch settings apply.

For switch sensor inputs, with LFD selected, make sure resistors (22kΩ and 680Ω) are fitted.

Note: For reliable, long-term operation the load on the output switching relays should not be less than 50mW, e.g.10mA at 5VDC.

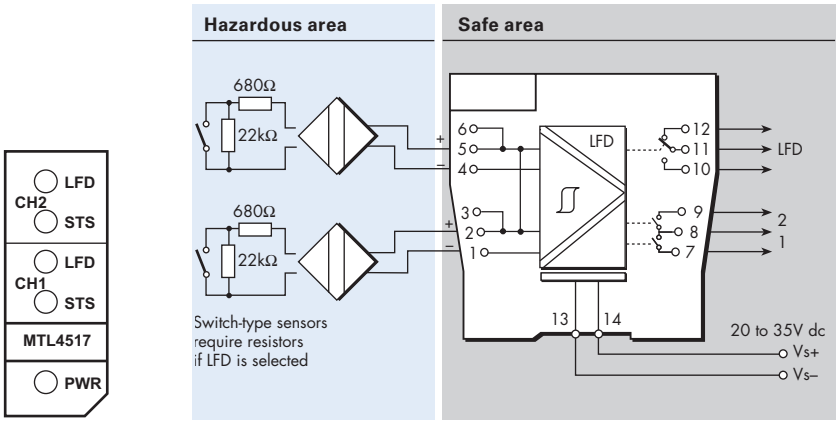

Figure 6.12: Top label for MTL4517

Terminal	Function
1	Input –ve (Ch 1)
2	Input +ve (Ch 1)
4	Input –ve (Ch 2)
5	Input +ve (Ch 2)
7	Output (Ch 1)
8	Common (Ch 1/Ch 2)
9	Output (Ch 1)
10	Normally-open contact (LFD)
11	Common (LFD)
12	Normally-closed contact (LFD)
13	Supply –ve
14	Supply +ve

6.2 Digital Output modules

The single channel Digital Output (DO) module range enables on/off devices in a hazardous area to be controlled from the safe area. Some units are loop powered while others enable solid-state switching by providing independent power supplies.

6.2.1 MTL4521/MTL4521L - Solenoid Alarm driver

Single channel, loop powered, IIC

The MTL4521 and MTL4521L are loop-powered modules that enable a device located in the hazardous area (IIC gas group) to be controlled from the safe area. They can both drive up to 48mA into a certified intrinsically safe low-power load, as well as non-energy-storing simple apparatus such as an LED. The only difference is that the MTL4521L has a lower current safety description i.e. 108mA instead of 147mA.

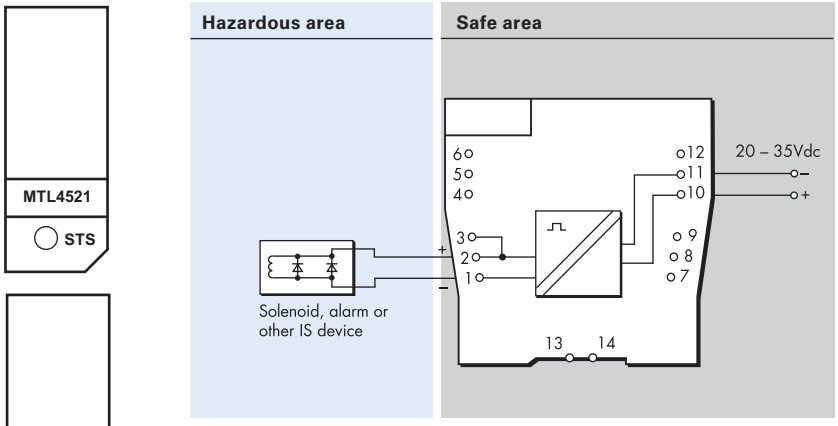

Figure 6.13: Top labels for MTL4521 & MTL4521L

Terminal	Function
1	Output –ve
2	Output +ve
10	Supply +ve
11	Supply –ve

6.2.2 MTL4523/MTL4523R - Solenoid Alarm driver

Single channel, with line-fault detection, IIC

The MTL4523 interface controls an on/off device in a hazardous area using a volt-free contact or logic signal in the safe area, and is suitable for driving loads such as solenoids. Line-Fault Detection (LFD) *operates independently of the output state* and is signalled by a safe-area, solid-state switch output which, when a field line is open or short-circuited, becomes de-energised in the MTL4523, and energised in the MTL4523R. Earth fault detection can be provided by connecting an MTL4220 earth leakage detector to terminal 3.

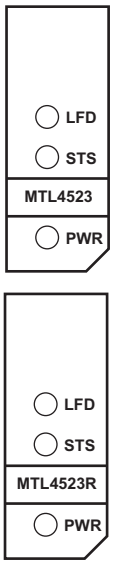

Figure 6.14: Top labels for MTL4523 & MTL4523R

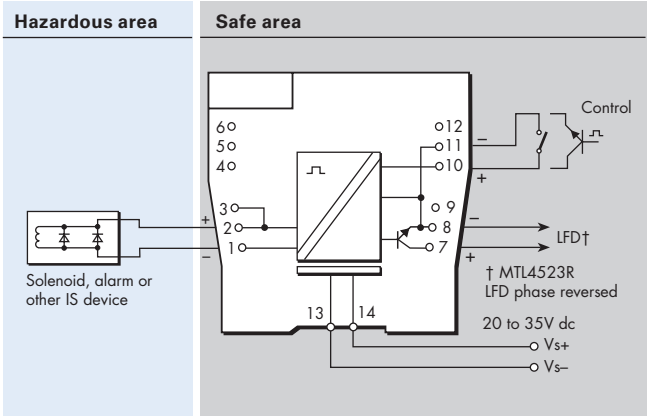

Terminal	Function
1	Output –ve
2	Output +ve
7	Line fault signal +ve
8	Line fault signal –ve
10	Control +ve
11	Control –ve
13	Supply –ve
14	Supply +ve

6.2.3 MTL4523L - Solenoid Alarm driver

Single channel, loop-powered with line-fault detection, IIC

The MTL4523L interface controls an on/off device in a hazardous area using a voltage signal in the safe area, and is suitable for driving loads such as solenoids. Line-Fault Detection (LFD) *operates only when the output is energised* and is signalled by a safe-area solid-state switch which, when a field line is open or short-circuited, becomes energised.

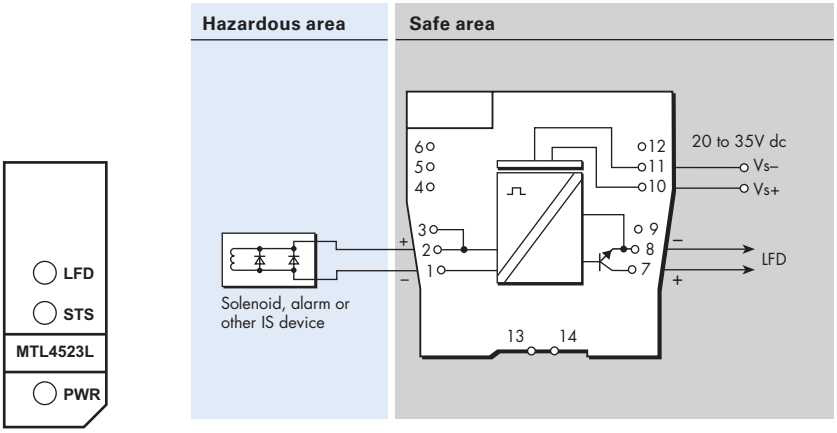

Figure 6.15: Top label for MTL4523L

Terminal	Function
1	Output –ve
2	Output +ve
7	Line fault signal +ve
8	Line fault signal –ve
10	Supply +ve
11	Supply –ve

6.2.4 MTL4523V/MTL4523VL - Solenoid Alarm driver

Single channel, voltage controlled with line-fault detection, IIC

With the MTL4523V or MTL4523VL interface, an on/off device in a hazardous area can be controlled by a voltage signal in the safe area. It is suitable for driving loads such as solenoids. Line fault detection (LFD), which operates irrespective of the output state, is signalled by a safe-area solid-state switch which energises if a field line is open or short–circuited.

The VL version has a lower current capability to suit alternative load requirements - see datasheet.

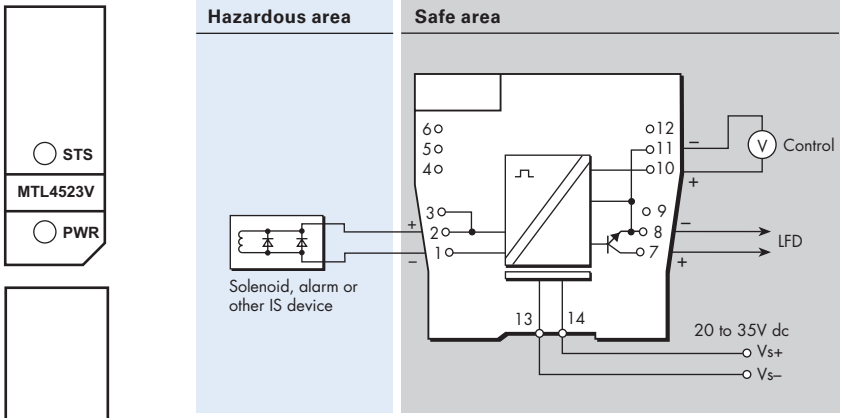

Figure 6.16: Top labels for MTL4523V & MTL4523VL

Terminal	Function
1	Output –ve
2	Output +ve
7	Line fault signal +ve
8	Line fault signal –ve
10	Control +ve
11	Control –ve
13	Supply –ve
14	Supply +ve

6.2.5 MTL4524 - Solenoid Alarm driver

Single channel, switch operated with override, IIC

The MTL4524 enables an on/off device in a hazardous area to be controlled by a volt-free contact or logic signal in the safe area. It can drive loads such as solenoids, alarms, LEDs and other low power devices that are certified as intrinsically safe or are classified as non-energy-storing simple apparatus. Short-circuit the Control input terminals to switch the output on.

A second safe-area input (Override) is provided. When short-circuited, the Override input will force the output to the off state; when open-circuit it has no effect.

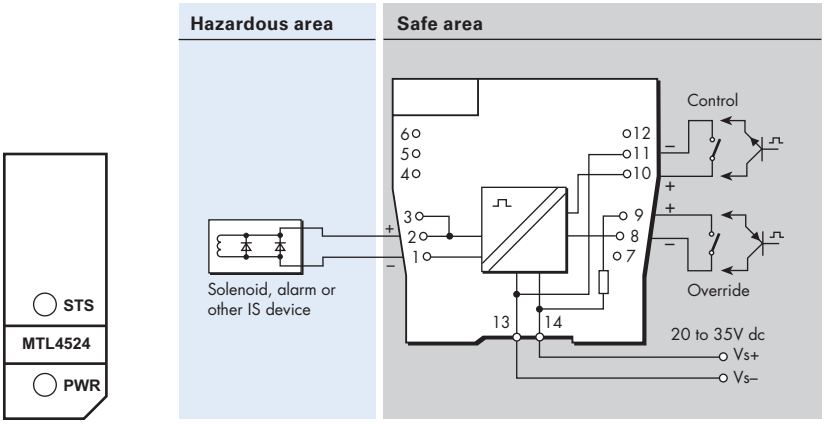

Figure 6.17: Top label for MTL4524

Terminal	Function
1	Output –ve
2	Output +ve
8	Override –ve
9	Override +ve
10	Control +ve
11	Control –ve
13	Supply –ve
14	Supply +ve

6.2.6 MTL4524S - Solenoid Alarm driver

Single channel, switch operated with 24V override, IIC

The MTL4524S enables an on/off device in a hazardous area to be controlled by a volt-free contact or a floating logic signal in the safe area. It can drive loads such as solenoids, alarms, LEDs and other low power devices that are certified as intrinsically safe or are classified as non-energy-storing simple apparatus. Short-circuit the Control input terminals to switch the output on.

A second safe-area voltage input (Override) is provided. With 9– 24V applied the Control input is enabled; when below 2V it forces the output to the off state.

Note: The Control input must be from an isolated source with respect to the Override input. The Override + (terminal 8) is joined internally to the Control – (terminal 11).

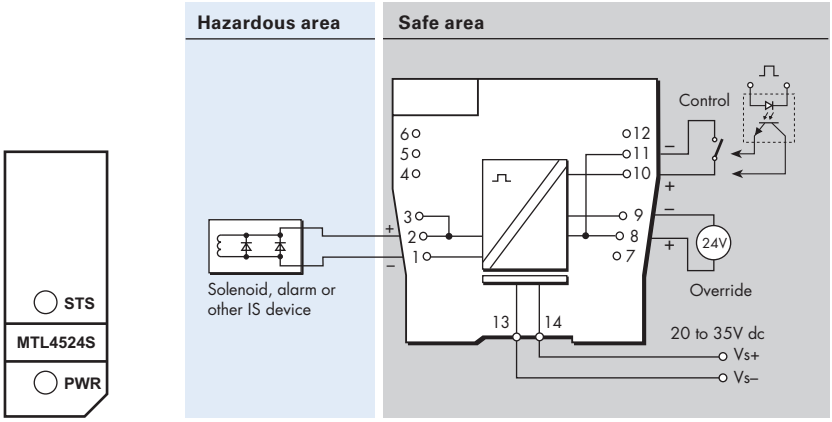

Figure 6.18: Top label for MTL4524S

Terminal	Function
1	Output –ve
2	Output +ve
8	Override +ve
9	Override –ve
10	Control +ve
11	Control –ve
13	Supply –ve
14	Supply +ve

6.2.7 MTL4525 - Solenoid Alarm driver

Single channel, switch operated with override, IIC

The MTL4525 enables an on/off device in a hazardous area (IIC gas group) to be controlled by a volt-free contact or logic signal in the safe area. It can drive loads such as solenoids, alarms, LEDs and other low power devices that are certified as intrinsically safe or are classified as non-energy-storing simple apparatus. Short-circuit the Control input terminals to switch the output on.

A second safe-area input (Override) is provided. When short-circuited, the Override input will force the output to the off state; when open-circuit it has no effect.

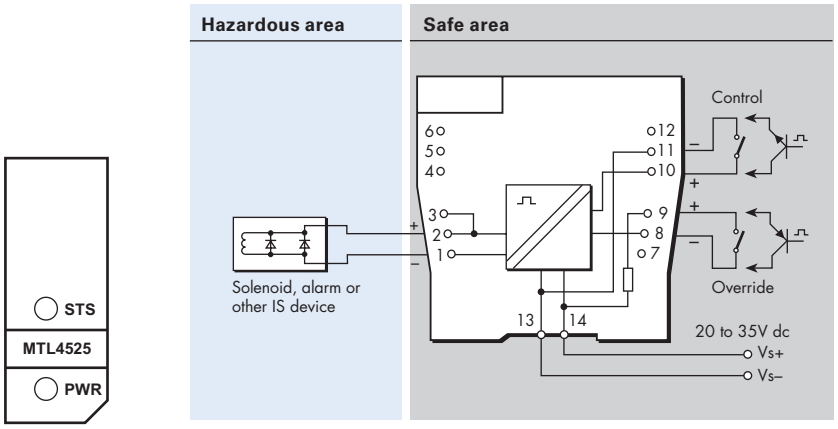

Figure 6.19: Top label for MTL4525

Terminal	Function
1	Output –ve
2	Output +ve
8	Override –ve
9	Override +ve
10	Control +ve
11	Control –ve
13	Supply –ve
14	Supply +ve

6.2.8 MTL4526 - Switch operated relay

Two channel, IS output

The MTL4526 enables two separate IS circuits in a hazardous area to be relay-contact controlled by two on-off switches or logic signals in a safe area. Applications include the calibration of strain-gauge bridges; changing the polarity (and thereby the tone) of an IS sounder; the testing of IS fire alarms; and the transfer of safe-area signals into an annunciator with IS input terminals not segregated from each other. The output-relay contacts are certified as non-energy-storing apparatus, and can be connected to any IS circuit without further certification, provided that separate IS circuits are such that they would remain safe if connected together.

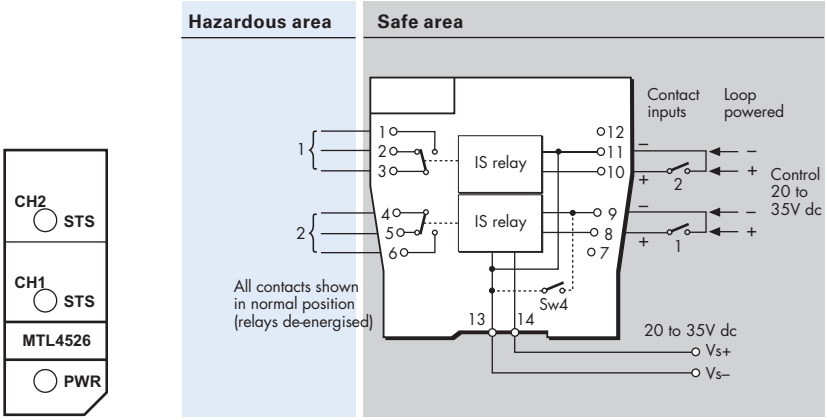

Figure 6.20: Top label for MTL4526

Terminal	Function
1	IS relay output 1 (normally open)
2	IS relay output 1 (normally closed)
3	IS relay output 1 (common)
4	IS relay output 2 (common)
5	IS relay output 2 (normally closed)
6	IS relay output 2 (normally open)
8	Relay 1 control +ve
9	Relay 1 control –ve
10	Relay 2 control +ve
11	Relay 2 control –ve
13	Supply –ve
14	Supply +ve

Mode	Function	SW1	SW2	SW3	SW4
Contact / Logic	2 ch	Off	On	On	On
Input	1in2out	On	On	On	On
Loop Powered	2 ch	Off	Off	Off	Off

Table 6.3 Switch settings for modes

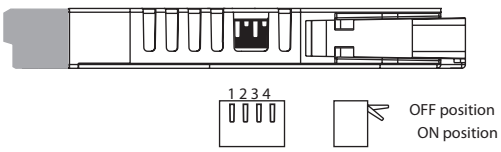

6.3 Pulse and Vibration modules

Single and dual channel modules are available to transfer vibration probe signals from a hazardous area to a safe one. Similarly, pulses from a switch, proximity detector, current pulse transmitter or voltage pulse transmitter, located in the hazardous area, can be safely transferred to the safe area.

6.3.1 MTL4531 - Vibration Transducer Interface

Single channel

The MTL4531 repeats a signal from a vibration sensor in a hazardous area, providing an output for a monitoring system in the safe area. The interface is compatible with 3-wire, eddy-current probes and accelerometers or 2-wire current sensors, and selection of the mode is made with a switch located on the side of the module.

Figure 6.21: Top label for MTL4531

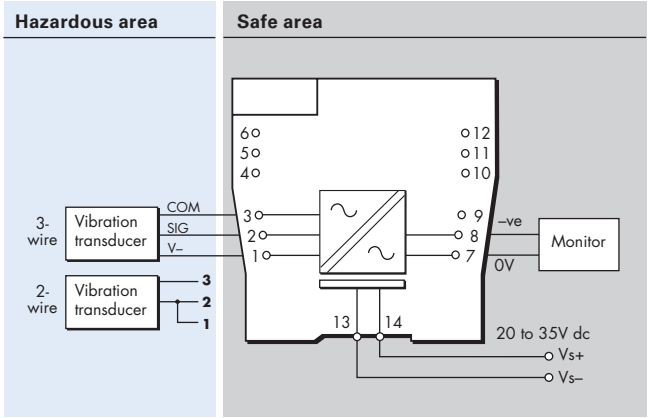

Terminal	Function
1	Transducer power V–
2	Signal
3	Common
7	Signal output 0V
8	Signal output –ve
13	Supply –ve
14	Supply +ve

2-/3-wire transducer setting switch

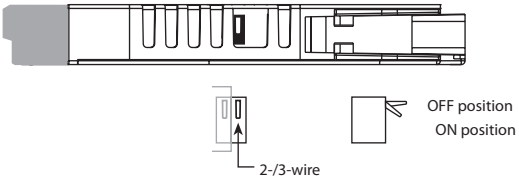

Mode	SW
2-wire (3.3mA)*	OFF
3-wire (20mA)	ON

* **Note**: When using 2-wire sensors, ensure that terminals 1 and 2 are linked as shown in the wiring diagram above.

WARNING! - Revision status 05 and below*

To enable optimum heat dissipation the recommended orientation for mounting is with the module vertical, i.e. with the vents in the case at the top and bottom.

This enables air to flow through the module.

In any other orientation, i.e. with the module horizontal, then the maximum ambient temperature is limited to:

- Close packed = 45°C
- Minimum of one module spacing = 55°C

*Revision status is the 2 digits after the +++ in the barcode

6.3.2 MTL4532 - Pulse Isolator

Pulse & 4/20mA current outputs

The MTL4532 isolates pulses from a switch, proximity detector, current pulse transmitter or voltage pulse transmitter located in a hazardous area. It is ideal for applications involving high pulse rates and fast response times, by repeating the pulses into the safe area, and the transistors used on the pulse output will switch +ve or –ve polarity signals.

It may be used immediately in simple or legacy mode, or it may be software configured for more specific applications - see next page for either option. With configuration, an analogue output proportional to frequency is available, together with a relay output, which may act as an alarm.

Note: For reliable, long-term operation the load on the output switching relay should not be less than 50mW, e.g.10mA at 5VDC.

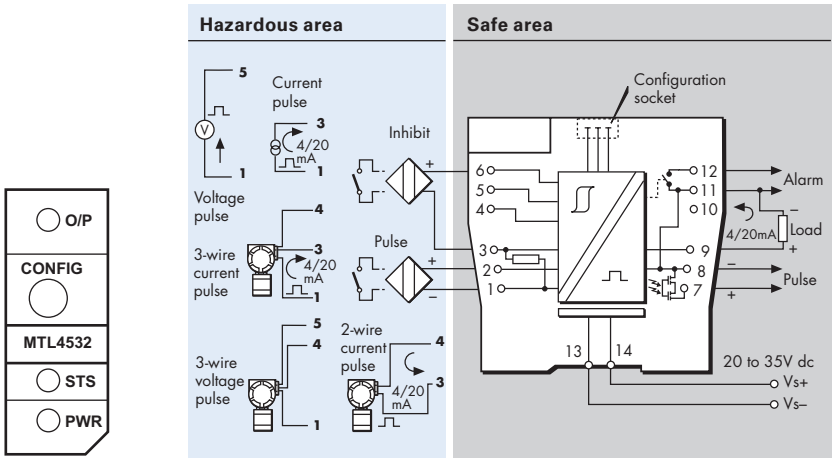

Figure 6.22: Top label for MTL4532

Terminal	Function
1	Common input –ve
2	Switch/proximity input +ve
3	Current pulse input +ve
4	Transmitter supply +ve
5	Voltage pulse input +ve
6	Inhibit input +ve
7	Pulse output +ve
8	Pulse/Current output –ve
9	Current output +ve
11	Alarm/Current output –ve
12	Alarm
13	Supply –ve
14	Supply +ve

Switches located on the edge of the module define the mode of operation.

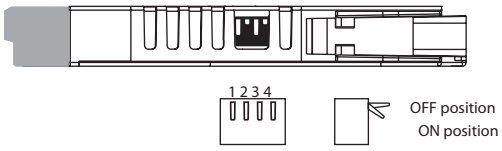

SW1	SW2	SW3	SW4
Vsp	Vsp	LFD	Mode

Vsp	SW1	SW2
3V	ON	ON
6V	ON	OFF
12V	OFF	OFF

LFD	SW3
OFF	OFF
ON	ON

Switch input operation

If switch contacts are used for this Pulse Input (terminals 1 & 2), then series and parallel resistors must be fitted - see Section 6.1.2 for recommended values.

Simple or Legacy mode - SW4 - OFF

If simple "pulse-in/pulse-out" operation is required or, if a replacement for the earlier MTL4032 pulse isolator is required, then SW4 should be set to OFF. The input switching point voltage (Vsp) thresholds can then be defined by Switches 1 & 2, and the LFD operation can be set with Switch 3. When Switch 3 is ON, the Alarm output (terminals 11 & 12) become active.

Configurable mode - SW4 - ON

In this mode, analogue, alarm and pulse outputs are available but the module *must* be software configured to define its operating mode. In this mode, software controls the LFD function and Switch 3 has no effect. Switches 1 & 2 continue to define the switching point threshold (Vsp). Configuration requires a personal computer, a PCL45USB interface and PCS45 software. See Section 6.9 on page 58 for details of the configurator.

Alarm inhibiting

The Inhibit input is provided to inhibit alarm output operation. This facility is useful, for example, during power-up, when pulse rates are below the alarm threshold. When normal operational values are established the inhibit can be disabled. Such a facility is sometimes referred to as a start-up delay. Inhibit is enabled by connecting a switch or proximity detector between terminals 6 and 3. If switch contacts are used for this input, then series and parallel resistors must be fitted - see Section 6.1.2 for recommended values.

LED indicators

Use the following LED information to understand the module status.

LED	Description
PWR Power (green)	ON - Power OK OFF - No power or insufficient voltage
O/P Output (yellow)	The LED will follow the pulse output state. If the output is pulsing then the LED brightness will pulse. If the pulsing is rapid or very short, the LED may dim if it is unable to respond to such changes. If the output is high, the LED will be ON.
STS Status (red - flashing)	In legacy mode a line fault will cause the LED to turn ON. In µC mode, the LED is programmable to display a line fault or an Alarm trip operation. In the event, it will also indicate a µC fault condition.

6.3.3 MTL4533 - Vibration Transducer Interface

WARNING!

Note: This module has been terminated and not available for use on new projects.

For existing applications spacing of one module position between active modules must be implemented to ensure reliable operation.

Two channel

The MTL4533 repeats signals from vibration sensors in a hazardous area, providing outputs for monitoring systems in the safe area. The interface is compatible with 3-wire eddy-current probes and accelerometers or 2-wire current sensors, and selection of the mode for each channel is made with the switches on the side of the module.

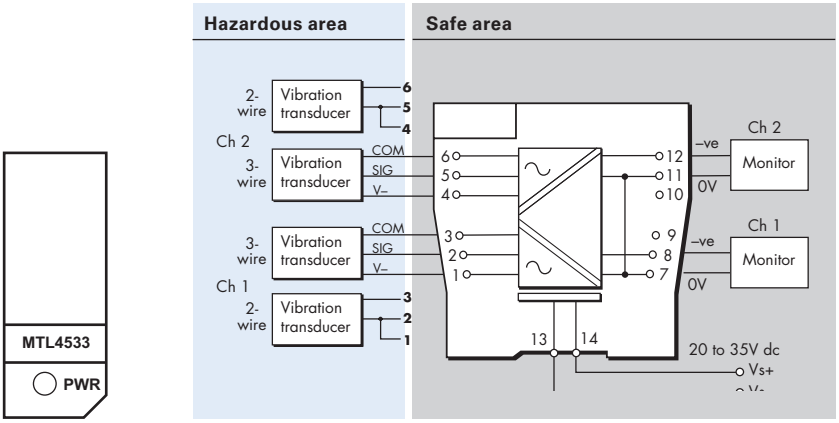

Figure 6.23: Top label for MTL4533

Terminal	Function
1	Ch 1 Transducer power V–
2	Ch 1 Signal
3	Ch 1 Common
4	Ch 2 Transducer power V–
5	Ch 2 Signal
6	Ch 2 Common
7	Ch 1 Signal output 0V
8	Ch 1 Signal output –ve
11	Ch 2 Signal output 0V
12	Ch 2 Signal output –ve
13	Supply –ve
14	Supply +ve

2-/3-wire transducer setting switches

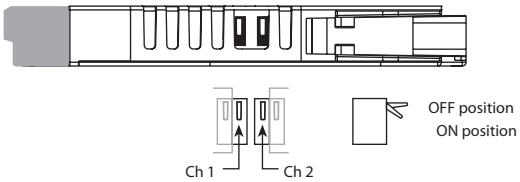

Mode	SW
2-wire (3.3mA)*	OFF
3-wire (20mA)	ON

* **Note**: When using 2-wire sensors, ensure that terminals 1 & 2 and 4 & 5 have wiring links as shown in the wiring diagram above.

Power dissipation

Because of its higher power dissipation (2.7W), it is mandatory that the MTL4533 is given additional spacing on the backplane by leaving vacant the module positions on either side of it.

6.4 Analogue Input modules

The analogue input (AI) modules support 2-wire or 3-wire 4/20mA or HART transmitters located in a hazardous area; repeating the current in other circuits to drive safe-area loads.

6.4.1 MTL4541/MTL4541S/MTL4541Y - Repeater Power Supply

Single channel, 4/20mA, HART® for 2- or 3-wire transmitters

The MTL4541 provides a fully-floating dc supply for energising a conventional 2- or 3-wire 4/20mA transmitter which is located in a hazardous area, and repeats the current in another floating circuit to drive a safe-area load. For HART 2-wire transmitters, the unit allows bi-directional communications signals superimposed on the 4/20mA loop current. Alternatively, the MTL4541S acts as a current sink for a safe-area connection rather than driving a current into the load. Seperately powered current sources, such as 4-wire transmitters, can be connected but will not support HART communication.

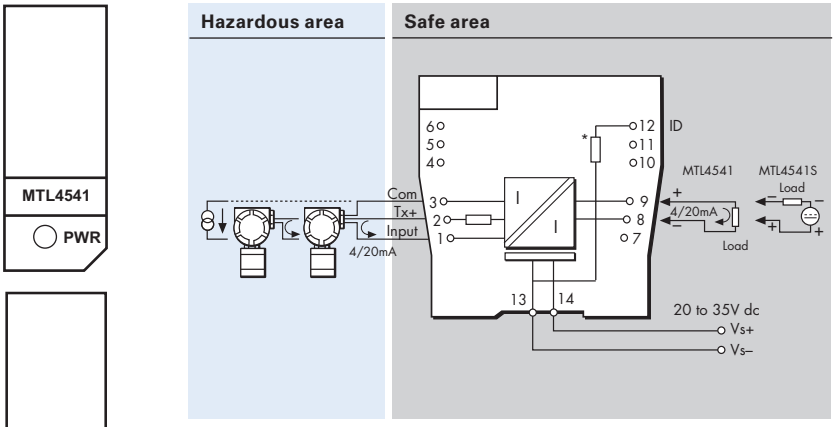

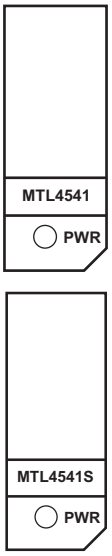

Figure 6.24: Top labels for MTL4541 & MTL4541S

Terminal	Function
1	Current input
2	Transmitter supply +ve
3	Common
8	Output –ve (+ve current sink)
9	Output +ve (–ve current sink)
12	ID resistor (MTL4541Y only)
13	Supply –ve
14	Supply +ve

* MTL4541Y is functionally identical to the MTL4541 but has an additional ID resistor connected to terminal 12.

6.4.2 MTL4541A/MTL4541AS/MTL4541YA - Current Repeater

Single channel, 4/20mA, passive input for HART® transmitters

The MTL4541A provides an input for separately powered 4/20mA transmitters and also allows bi-directional transmission of HART communication signals superimposed on the 4/20mA loop current. Alternatively, the MTL4541AS acts as a current sink for a safe-area connection rather than driving a current into the load.

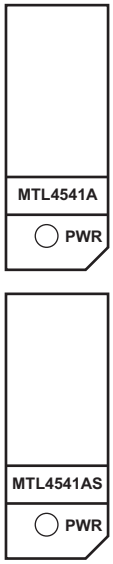

Figure 6.25: Top labels for MTL4541A & MTL4541S

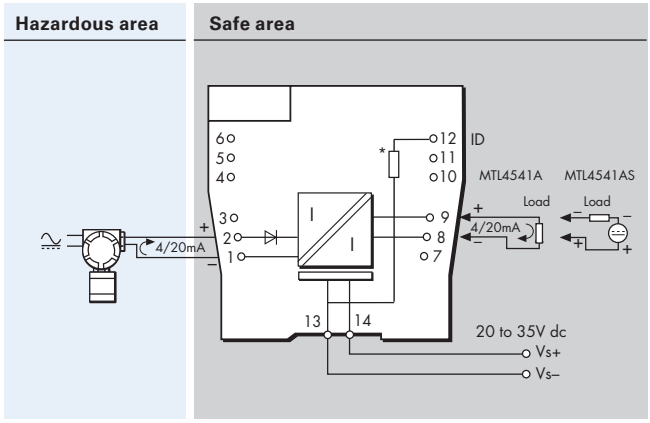

Terminal	Function
1	Input –ve
2	Input +ve
8	Output –ve (+ve current sink)
9	Output +ve (–ve current sink)
12	ID resistor (MTL4541YA only)
13	Supply –ve
14	Supply +ve

* MTL4541Y is functionally identical to the MTL4541 but has an additional ID resistor connected to terminal 12.

6.4.3 MTL4541B/MTL4541P/MTL4541T - Repeater Power Supply

Single channel, 4/20mA, HART® for 2- or 3-wire transmitters

These modules are intended for use as replacements for previous MTL4000 range of modules on existing backplane installations. They provide a fully-floating dc supply for energising a conventional 2- or 3-wire 4/20mA transmitter located in a hazardous area, and repeat the current in another circuit to drive a safe-area load. For HART 2-wire transmitters, the units allow bi-directional communications signals superimposed on the 4/20mA loop current.

The MTL4541P is a higher power version of the MTL4541B, usable for all gas groups provided that the field equipment is suitably certified.

The MTL4541T has a reduced maximum open-circuit voltage which, together with a corresponding increase in allowed cable capacitance, permits the use of longer field lines compared to the MTL4541.

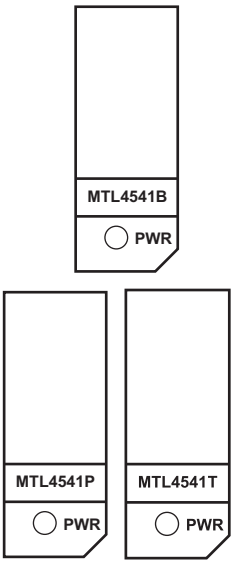

Figure 6.26: Top labels for MTL4541B, MTL4541P & MTL4541T

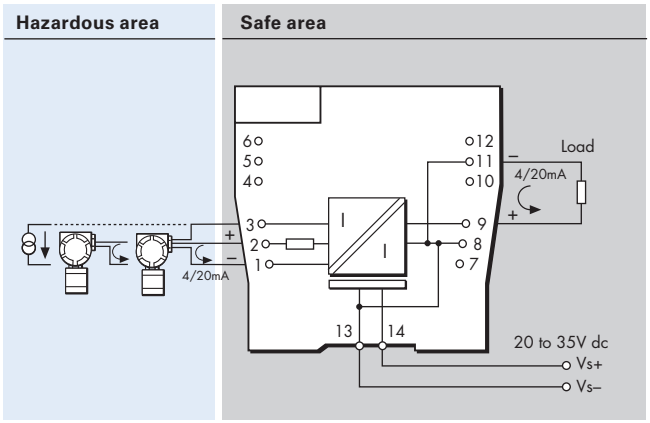

Terminal	Function
1	Current input
2	Transmitter supply +ve
3	Common
8	Output –ve
9	Output +ve
11	Output –ve
13	Supply –ve
14	Supply +ve

Note: Safe area outputs are referenced to PSU –ve

6.4.4 MTL4544/MTL4544S - Repeater Power Supply

Two channel, 4/20mA, HART® for 2- or 3-wire transmitters

The MTL4544 is intended for use as a replacement for a previous MTL4000 range of modules on existing backplane installations. It provides fully-floating dc supplies for energising two conventional 2-wire or 3-wire 4/20mA or HART transmitters located in a hazardous area, and repeats the current in other circuits to drive two safe-area loads. For HART transmitters, the unit allows bi-directional transmission of digital communication signals superimposed on the 4/20mA loop current. Alternatively, the MTL4544S acts as a current sink for a safe-area connection rather than driving a current into the load. Seperately powered current sources, such as 4-wire transmitters, can be connected but will not support HART communication.

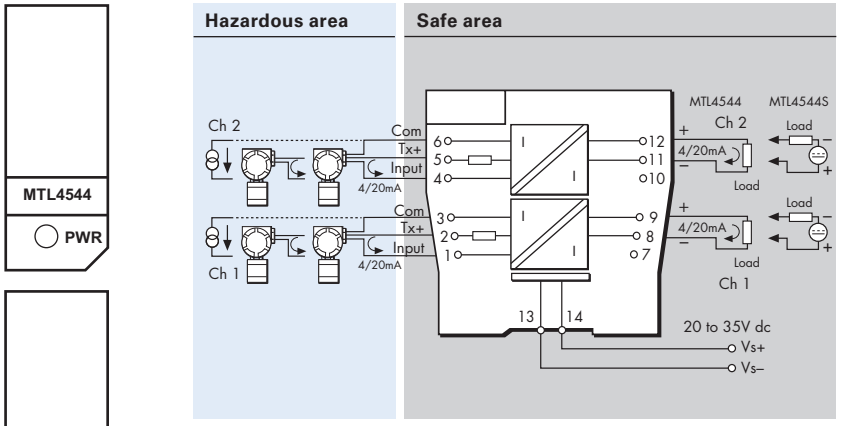

Figure 6.27: Top labels for MTL4544 & MTL4544S

Terminal	Function
1	Ch1 current input
2	Ch1 transmitter supply +ve
3	Ch1 common
4	Ch2 current input
5	Ch2 transmitter supply +ve
6	Ch2 common
8	Ch1 output –ve (+ve current sink)
9	Ch1 output +ve (–ve current sink)
11	Ch2 output –ve (+ve current sink)
12	Ch2 output +ve (–ve current sink)
13	Supply –ve
14	Supply +ve

The MTL4544 or MTL4544S can also be used to drive two safe-area loads from a single 2-wire transmitter (i.e. 1 in, 2 out) by interconnecting the input channels as shown in the diagram (right).

Note: In this mode the HART data is transferred via channel 1 output only.

See also the MTL4544D.

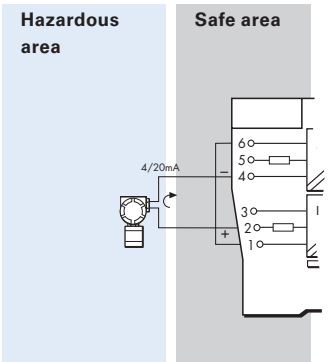

6.4.5 MTL4544A/MTL4544AS - Current Repeater

Two channel, 4/20mA, passive input for HART® transmitters

The MTL4544A provides inputs for separately powered 4/20mA transmitters and also allows bi-directional transmission of HART communication signals superimposed on the 4/20mA loop current. Alternatively, the MTL4544AS acts as a current sink for a safe-area connection rather than driving a current into the load.

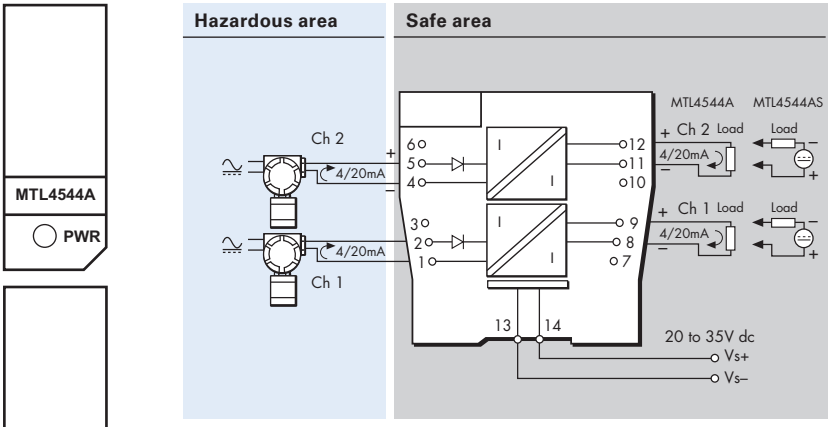

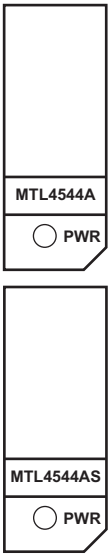

Figure 6.28: Top labels for MTL4544A & MTL4544AS

Terminal	Function
1	Ch1 input –ve
2	Ch1 input +ve
4	Ch2 input –ve
5	Ch2 input +ve
8	Ch1 output –ve (+ve current sink)
9	Ch1 output +ve (–ve current sink)
11	Ch2 output –ve (+ve current sink)
12	Ch2 output +ve (–ve current sink)
13	Supply –ve
14	Supply +ve

6.4.6 MTL4544B - Repeater Power Supply

Two channel, 4/20mA, HART® for 2- or 3-wire transmitters

The MTL4544B is intended for use as a replacement for a previous MTL4000 range of modules on existing backplane installations. It provides fully-floating dc supplies for energising two conventional 2-wire or 3-wire 4/20mA or HART transmitters located in a hazardous area, and repeats the current in other circuits to drive two safe-area loads. For HART transmitters, the unit allows bi-directional transmission of digital communication signals superimposed on the 4/20mA loop current.

Figure 6.29: Top label for MTL4544B

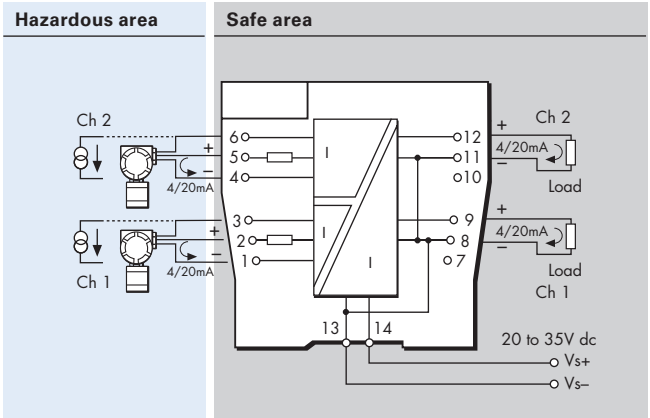

Terminal	Function
1	Ch1 current input
2	Ch1 transmitter supply +ve
3	Ch1 common
4	Ch2 current input
5	Ch2 transmitter supply +ve
6	Ch2 common
8	Ch1 output –ve
9	Ch1 output +ve
11	Ch2 output –ve
12	Ch2 output +ve
13	Supply –ve
14	Supply +ve

Note: Safe area outputs are referenced to PSU –ve

6.4.7 MTL4544D - Repeater Power Supply

Single channel, 4/20mA, HART® for 2- or 3-wire transmitters, two outputs

The MTL4544D provides a fully-floating dc supply for energising a conventional 2- or 3-wire 4/20mA transmitter located in a hazardous area, and repeats the current in other circuits to drive two safe-area loads. For HART 2-wire transmitters, the unit allows bi-directional transmission of digital communication signals superimposed on the 4/20mA loop current. Seperately powered current sources, such as 4-wire transmitters, can be connected but will not support HART communication.

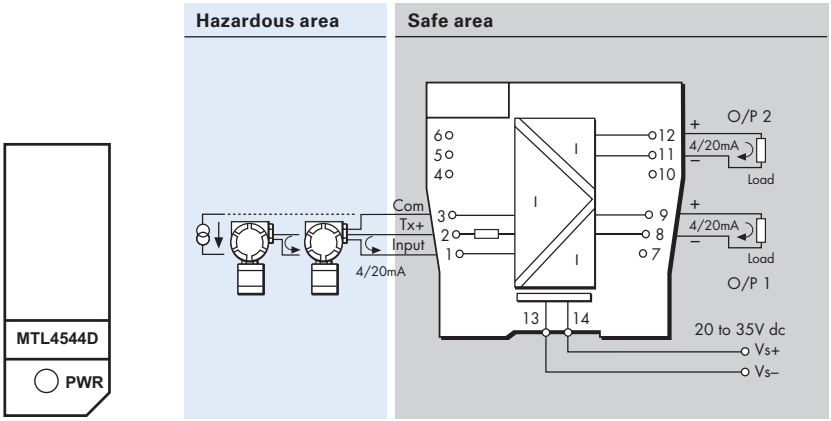

Figure 6.30: Top label for MTL4544D

Terminal	Function	
1	Current input	
2	Transmitter supply +ve	
3	Common	
8	Output 1 –ve	HART supported
9	Output 1 +ve	
11	Output 2 –ve	HART not available
12	Output 2 +ve	
13	Supply –ve	
14	Supply +ve	

NOTE
For correct operation of the module, a suitable load must be present on *both* output channels.

This is of particular importance during testing, commissioning or maintenance activities when the temporary disconnection, or absence, of a load can affect the transfer accuracy of the analogue variable.

6.5 Analogue Output modules

The analogue output (AO) modules accept 4/20mA floating signals from safe-area controllers to drive current/pressure converters (or any other load up to 800Ω) in a hazardous area.

6.5.1 MTL4546/MTL4546C/MTL4546S/MTL4546Y/MTL4545Y - Isolating Driver

Single channel, 4/20mA, HART® for valve positioners with line-fault detection

The MTL4546 accepts a 4/20mA floating signal from a safe-area controller to drive a current/pressure converter (or any other load up to 800Ω) in a hazardous area. For HART valve positioners, the module also permits bi-directional transmission of digital communication signals so that the device can be interrogated either from the operator station or by a hand-held communicator. Process controllers with a readback facility can detect open or short circuits in the field wiring: if these occur, the current taken into the terminals drops to a preset level. The MTL4546C and MTL4546Y are identical to the MTL4546 except that they provide open circuit detection only (no short-circuit detection).

The MTL4546S has a reduced maximum open-circuit voltage which permits the usage of longer field lines compared to the MTL4546.

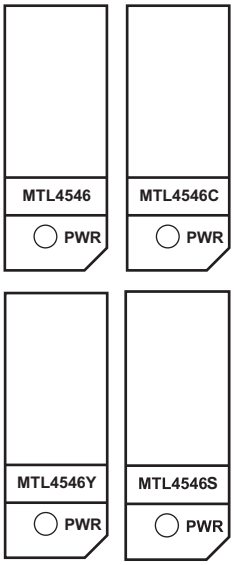

Figure 6.31: Top labels for MTL4546, MTL4546C, MTL4546Y & MTL4546S

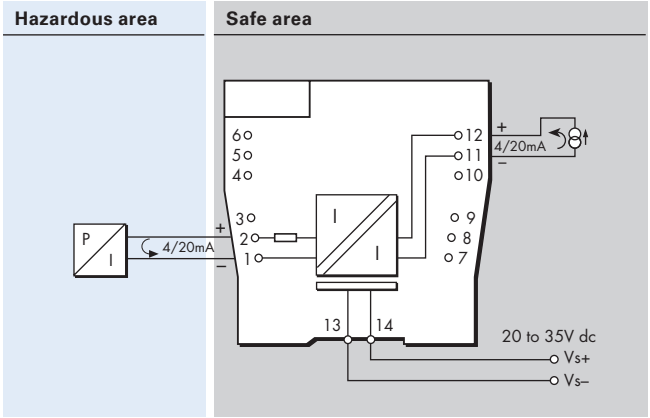

Terminal	Function	Term	MTL4545Y only
1	Output –ve	1	Output –ve
2	Output +ve	2	Output +ve
11	Input –ve	8	Input –ve
12	Input +ve	9	Input +ve
13	Supply –ve	12	ID resistor
14	Supply +ve	13	Supply –ve
		14	Supply +ve

Input Characteristics

Field wiring state	MTL4546	MTL4546C	MTL4545Y/ MTL4546Y
Normal	< 6.0V	< 6.0V	< 6.0V
Open-circuit	< 0.9mA	< 0.9mA	< 0.5mA
Short-circuit	< 0.9mA	N.A.	N.A.

6.5.2 MTL4549/MTL4549C/MTL4549Y - Isolating Driver

Two channel, 4/20mA, HART® for valve positioners with line-fault detection

The MTL4549 accepts 4/20mA floating signals from safe-area controllers to drive 2 current/pressure converters (or any other load up to 800Ω) in a hazardous area. For HART valve positioners, the module also permits bi-directional transmission of digital communication signals so that the device can be interrogated either from the operator station or by a hand-held communicator. Process controllers with a readback facility can detect open or short circuits in the field wiring: if these occur, the current taken into the terminals drops to a preset level. The MTL4549C and MTL4549Y are identical to the MTL4549 except that they provide open circuit detection only (no short-circuit detection).

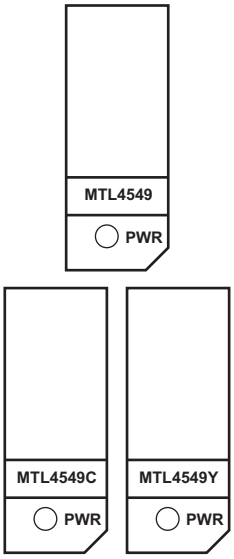

Figure 6.32: Top labels for MTL4549 MTL4549C & MTL4549Y

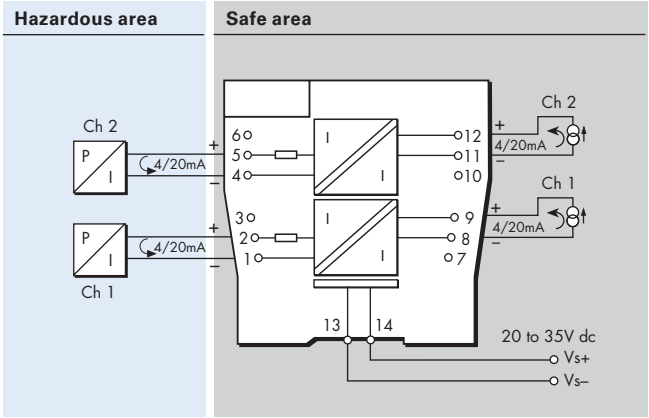

Terminal	Function
1	Output –ve (Ch 1)
2	Output +ve (Ch 1)
4	Output –ve (Ch 2)
5	Output +ve (Ch 2)
8	Input –ve (Ch 1)
9	Input +ve (Ch 1)
11	Input –ve (Ch 2)
12	Input +ve (Ch 2)
13	Supply –ve
14	Supply +ve

Input Characteristics

Field wiring state	MTL4549	MTL4549C	MTL4549Y
Normal	< 6.0V	< 6.0V	< 6.0V
Open-circuit	< 0.9mA	< 0.9mA	< 0.5mA
Short-circuit	< 0.9mA	N.A.	N.A.

6.6 Fire and Smoke Interface modules

Interfaces for use with conventional fire and smoke detectors located in hazardous areas.

6.6.1 MTL4561 - Fire and Smoke Detector Interface

Two channel

The MTL4561 is a loop-powered 2–channel interface for use with conventional fire and smoke detectors located in hazardous areas. In operation, the triggering of a detector causes a corresponding change in the safe–area current. The unit features reverse input polarity protection, while 'no-fail' earth fault detection on either line can be provided by connecting an earth leakage detector to terminal 3 and/or 6.

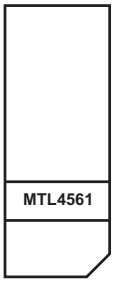

Figure 6.33: Top labels for MTL4561

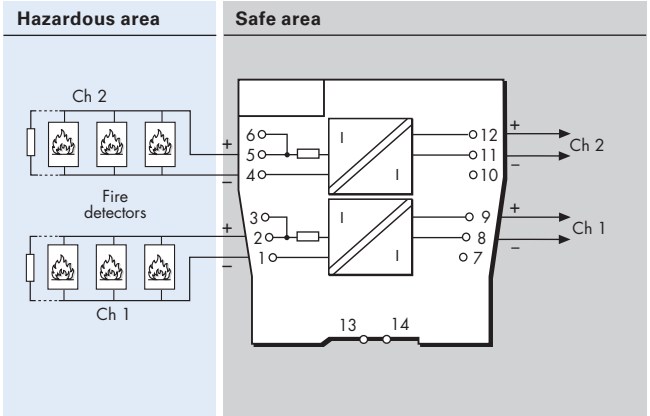

Terminal	Function
1	Output –ve (Ch 1)
2	Output +ve (Ch 1)
4	Output –ve (Ch 2)
5	Output +ve (Ch 2)
8	Input –ve (Ch 1)
9	Input +ve (Ch 1)
11	Input –ve (Ch 2)
12	Input +ve (Ch 2)

6.7 Temperature Input modules

These modules accept inputs from low-level dc sources such as thermocouples or RTDs in hazardous areas and convert them into 4/20mA signals to drive safe area loads.

***Thermocouples** early burnout detection (EBD)*

When EBD is selected, the resistance of the thermocouple circuit is monitored and an alarm is raised when there is an increase of more than 50Ω. This enables preventative maintenance to be conducted on the field installation before the thermocouple actually breaks.

Configuration using PCS45/PCL45USB

Use PCS45 software, in conjunction with the PCL45USB serial link, to configure these modules. Instructions are contained within the software. See Section 6.9 on page 58 for further details.

All MTL4573 and MTL4575 modules are supplied with the following default configuration.

Input type	Type K thermocouple
Linearisation	enabled
Units	°C
CJ Compensation	enabled
Damping value	0 seconds
Smoothing value	0 seconds
Output zero	0°C
Output span	250°C
Tag and description fields	blank
Open circuit alarm	set high (upscale)
Transmitter failure alarm	set low (downscale)
CJ failure alarm	set low (downscale)
Line frequency	50Hz

Use PCS45 software, in conjunction with the PCL45USB serial link, to modify these default values.

6.7.1 MTL4573 - Temperature Converter

Single channel, THC or RTD input

The MTLx573 converts a low-level dc signal from a temperature sensor mounted in a hazardous area into a 4/20mA current for driving a safe-area load. Software selectable features include linearisation, ranging, monitoring, testing and tagging for all thermocouple types and 2-, 3- or 4-wire RTDs. (For thermocouple applications the HAZ-CJC plug on terminals 1–3 includes an integral CJC sensor). Configuration is carried out using a personal computer with PCS45 software.

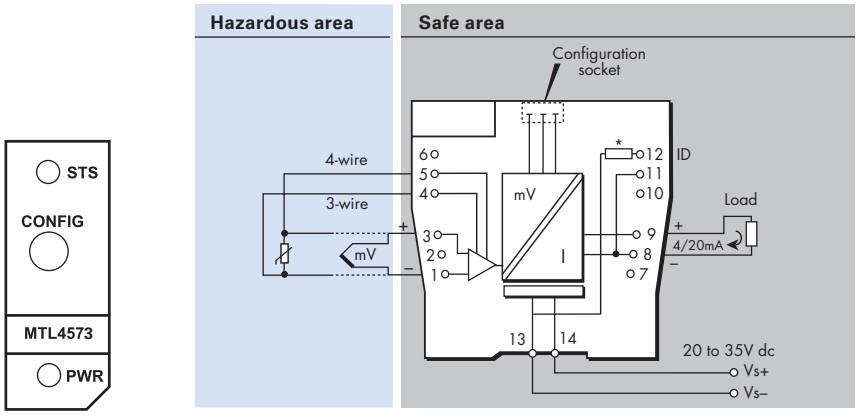

Figure 6.34: Top labels for MTL4573

Terminal	Function
1	THC/mV/RTD input –ve
3	THC/mV/RTD input +ve
4	3-wire RTD input –ve
5	4-wire RTD input +ve
8	Output –ve
9	Output +ve
11	Output –ve
12	ID resistor (*MTL4573Y only)
13	Supply –ve
14	Supply +ve

Top label

Use the following LED information to understand the module status.

Status	**PWR** (green)	**STS**(yellow)
Power ON	ON	
Insufficient voltage or Power OFF	OFF	
Normal working	ON	
Device failure	FLASH	
Sensor failure/Error	FLASH	
Early burnout detection (EBD)	FAST FLASH	

6.7.2 MTL4575 - Temperature Converter

Single channel, THC or RTD input with alarm

The MTL4575 converts a low-level dc signal from a temperature sensor mounted in a hazardous area into a 4/20mA current for driving a safe-area load. Software selectable features include linearisation, ranging, monitoring, testing and tagging for all thermocouple types and 2, 3 or 4-wire RTDs. (For thermocouple applications the HAZ-CJC plug, on terminals 1–3, includes an integral CJC sensor). A single alarm output is provided and may be configured for process alarm or to provide notice of early thermocouple failure.

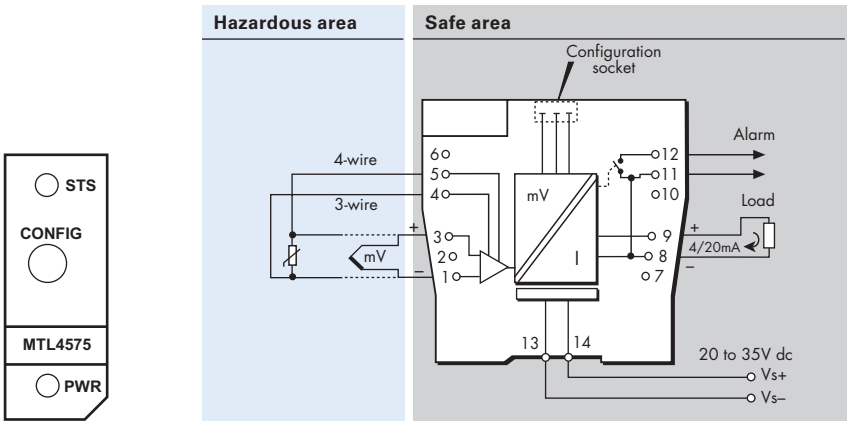

Figure 6.35: Top label for MTL4575

Terminal	Function
1	THC/mV/RTD input –ve
3	THC/mV/RTD input +ve
4	3-wire RTD input –ve
5	4-wire RTD input +ve
8	Output –ve
9	Output +ve
11	Output –ve/Alarm relay
12	Alarm relay
13	Supply –ve
14	Supply +ve

Top label

Use the following LED information to understand the module status.

Status	**PWR** (green)	**STS**(yellow)
Power ON	ON	
Insufficient voltage or Power OFF	OFF	
Normal working	ON	
Device failure	FLASH	
Sensor failure/Error	FLASH	
Output relay ON (Trip)	ON	ON
Output relay OFF (Trip)	ON	OFF
Early burnout detection (EBD)	FAST FLASH	

6.7.3 MTL4576-RTD - Temperature Converter

Two channel, RTD/potentiometer input

The MTL4576-RTD converts signals from resistance temperature detectors (RTDs) mounted in a hazardous area, into 4/20mA currents for driving safe-area loads. The MTL4576-RTD is compatible with 2- and 3-wire RTD inputs.

Performance features, including input type and characterisation, ranging, monitoring, testing and tagging are selected using PCS45 software, which is loaded onto a personal computer and connected via the PCL45USB serial link - see Section 6.9.

Use the following LED information to understand the module status.

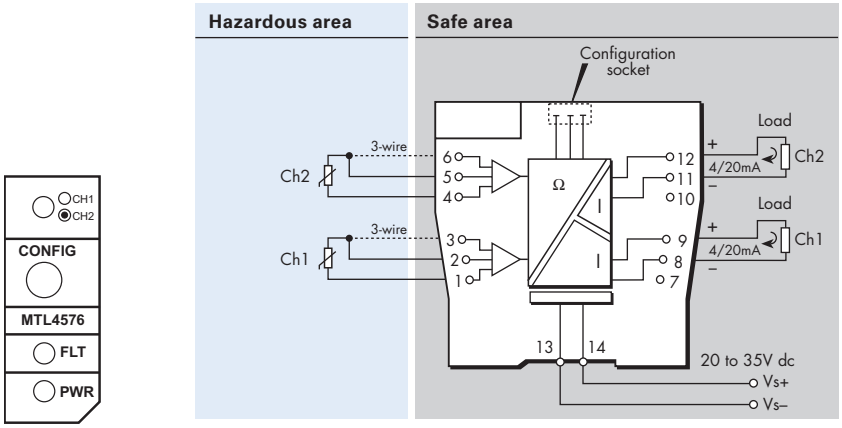

Figure 6.36: Top label for MTL4576

Terminal	Function
1	RTD input (Ch1)
2	RTD input (Ch1)
3	3–wire RTD input (Ch1)
4	RTD input (Ch2)
5	RTD input (Ch2)
6	3–wire RTD input (Ch2)
8	Output –ve (Ch1)
9	Output +ve (Ch1)
11	Output –ve (Ch2)
12	Output +ve (Ch2)
13	Supply –ve
14	Supply +ve

Top label

Use the following LED information to understand the module status.

Status	**PWR** (green)	**FLT** (red)	**STS**(yellow)
Power ON	ON		
Insufficient voltage or Power OFF	OFF		
Communication in progress	FLASH		
Normal working	ON	OFF	OFF
Device failure	ON	ON	
Channel 1 - Sensor failure/Error	ON	FLASH	OFF
Channel 2 - Sensor failure/Error	ON	FLASH	ON

Default configuration for both channels is as shown in 6.7 except:

- Input type: pt100 3 wire RTD
- S/C alarm set low (downscale)

6.7.4 MTL4576-THC - Temperature Converter

Two channel, mV/THC input

The MTL4576-THC converts low-level dc signals from temperature sensors mounted in a hazardous area, into 4/20mA currents for driving safe-area loads. The hazardous area connections include cold-junction compensation and do not need to be ordered separately.

Performance features, including linearisation for standard thermocouple types, ranging, monitoring, testing and tagging are selected using PCS45 software, which is loaded onto a personal computer and connected via the PCL45USB serial link - see Section 6.9.

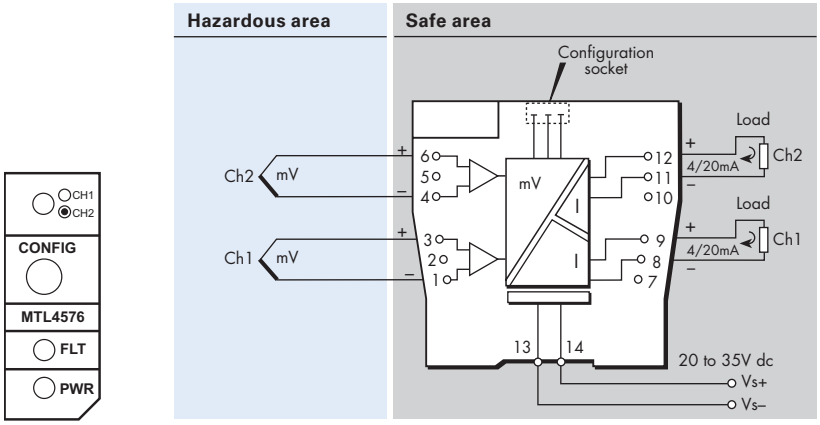

Figure 6.37: Top label for MTL4576

Terminal	Function
1	THC/mV (Ch1)
3	THC/mV (Ch1)
4	THC/mV (Ch2)
6	THC/mV (Ch2)
8	Output –ve (Ch1)
9	Output +ve (Ch1)
11	Output –ve (Ch2)
12	Output +ve (Ch2)
13	Supply –ve
14	Supply +ve

Top label

Use the following LED information to understand the module status.

Status	**PWR** (green)	**FLT** (red)	**STS**(yellow)
Power ON	ON		
Insufficient voltage or Power OFF	OFF		
Communication in progress	FLASH		
Normal working	ON	OFF	OFF
Device failure	ON	ON	
Channel 1 - Sensor failure/Error	ON	FLASH	OFF
Channel 2 - Sensor failure/Error	ON	FLASH	ON

Default configuration for both channels is as shown in 6.7 except S/C alarm set OFF.

6.7.5 MTL4581 - mV/Thermocouple Isolator

Single channel, mV/THC input for low power signals

The MTL4581 takes a low-level dc signal from a voltage source in a hazardous area, isolates it, and passes it to a receiving instrument located in the safe area. The module is intended for use with thermocouples utilising external cold-junction compensation. A switch enables or disables the safety drive in the event of thermocouple burnout or a cable breakage; a second switch permits the selection of upscale or downscale operation as the application requires.

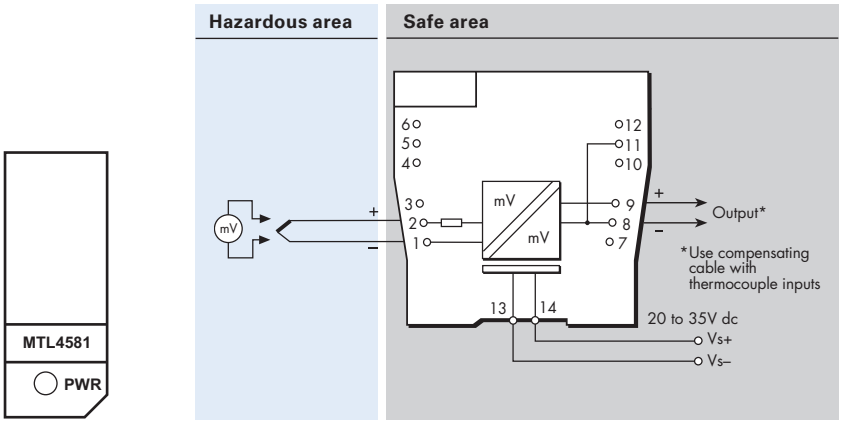

Figure 6.38: Top label for MTL4581

Terminal	Function
1	THC/mV input –ve
2	THC/mV input +ve
8	Output –ve
9	Output +ve
11	Output –ve
13	Supply –ve
14	Supply +ve

Please note that the safety drive on the MTL4581 responds to a line breakage (i.e. an open circuit) or a thermocouple burnout. *It does not provide detection of a short circuit.* It can however, when chosen, be set to drive the output either upscale or downscale. These options are selected using the switches located on the side of the module.

Safety drive switches		Line breakage	V_{out} value
Sw2 Safety drive	Sw1 Drive direction		
OFF	N/A	NO	V_{in}*
OFF	N/A	YES	undetermined
ON	+	NO	V_{in}*
ON	+	YES	> +50mV
ON	–	NO	V_{in}*
ON	–	YES	< –50mV

* Within V_{in}/V_{out} *transfer accuracy and drift error as specified in the product datasheet.*

Safety drive switches

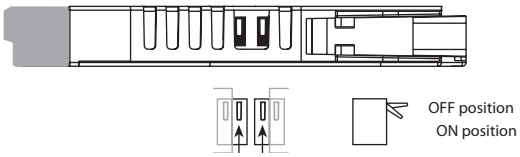

Sw1	OFF	ON
Drive direction	'+' Upscale	'–' Downscale

Sw2	OFF	ON
Safety drive	OFF	ON

6.8 General modules

These are general purpose modules that have applications associated with the MTL4500 range of modules.

6.8.1 MTL4599 - Dummy Isolator

The primary function of the MTL4599, is to provide termination and earthing facilities for unused cable cores from hazardous areas, that can occur, for example, if any MTL4500 module has been removed for maintenance purposes.

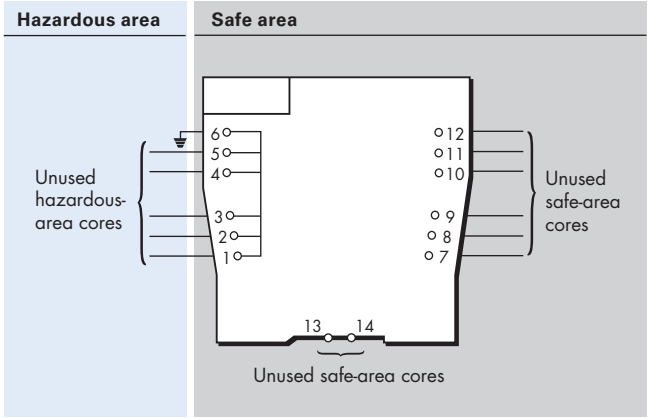

6.8.2 MTL4599N - General purpose feedthrough module

The feed-through termination module allows non–IS connections to the MTL4500 backplanes. The wires from the field are connected using screw terminals. Six terminals are provided for each contact of the multiway connector on the backplane. The terminals and cables conform to IS regulations so that non–IS and IS signals can be mixed on the same backplane.

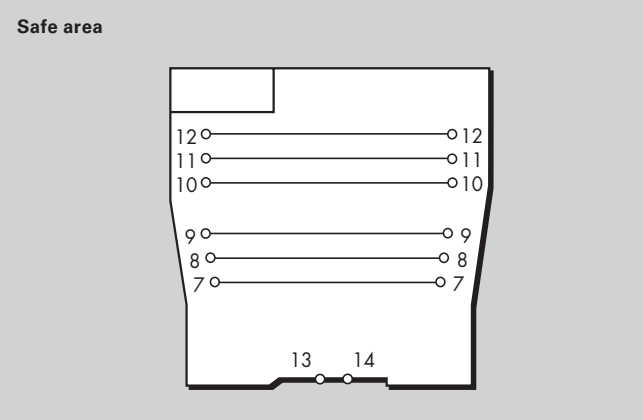

Note: Must not be used with signals >50V or >0.25A

6.9 PCS45/PCL45USB configurator for MTL temperature converters

The PCS45/PCL45USB configurator allows MTL isolating temperature converters to be configured from a standard PC running a Microsoft® Windows® operating system. The configurator comprises PC software provided on a CD (PCS45), and an ATEX certified interfacing link (PCL45USB). Temperature converters can be configured from the safe area, while on-line, and the software allows configurations to be saved to disk and printed out when required.

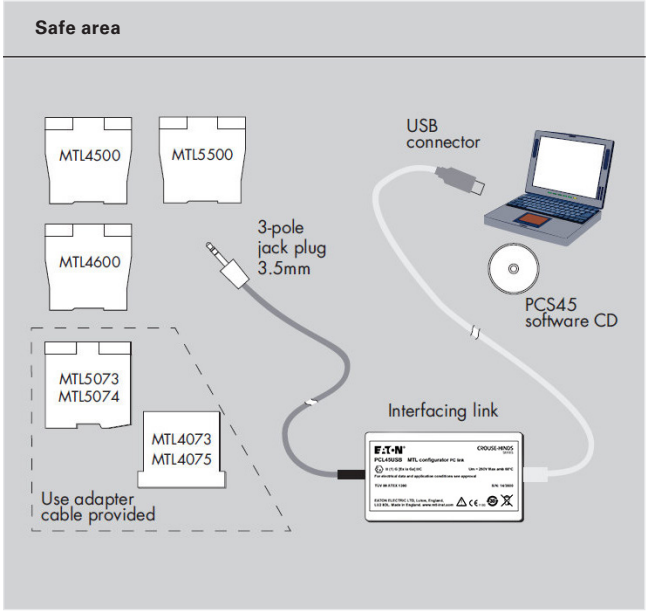

It is suitable for use with MTL4000, MTL4500, MTL4600, MTL5000 and MTL5500 range of products.

PCL45USB hardware

The PCL45USB provides the interfacing link between the converter module and the PC running the software and connects to the PC using the USB cable provided. The PCL45USB has a built-in cable fitted with a 3.5mm jackplug to connect to the 'Config' socket on MTL4500 and MTL5500 range of converters. An adapter cable is also provided to accommodate our earlier converters.

PCS45 Configuration software

The software provided on the CD requires only approximately 20Mb of hard disk space and is compatible with Windows 2000, Windows XP or Windows 7. Ensure that the chosen PC has a CD ROM drive and an available USB port. A local or network printer may also be an advantage.

Safety

It is not permitted to connect the PCL45USB to any device other than one approved by Eaton. Authorisation is valid provided that the converter type is named on the PCL45USB certificate or if the PCL45USB is specified on the converter certificate. Repairs to the PCL45USB are not permitted.

Setting up

The equipment can be used only in the safe area.

Before plugging in the PCL45USB link to the computer, extract the USB driver files to a known location on your PC. Afterwards, plug in the PCL45USB to the USB port on the PC and wait for it to find the new device. When requested by the computer, show it the location of the driver files so that it can complete the device installation.

Place the PCS45 software CD in the computer's CDROM drive and follow the on-screen instructions to install the software.

The PCL45USB is powered from the data lines and quickly establishes communication after plugging the 3.5mm connector to the device socket.

Note: Ensure that the 3.5mm jack plug is fully inserted into the socket of the temperature converter.

The software and its operations manual (INM PCS45) is available on-line at:
http://www.mtl-inst.com/product/configuration_tools_and_software/

7 FAULT FINDING AND ROUTINE MAINTENANCE

⚠	**WARNING!** On removal, take care that a hazardous-area connector is not laid in a position in which it may inadvertently come into contact with the backplane or with components on the backplane.

7.1 Maintenance precautions

Most Codes of Practice for intrinsic safety permit live maintenance on intrinsically safe devices and systems, provided precautions are taken to preserve the integrity of the device or system. During live maintenance of MTL4500 modules, the hazardous-area connectors that plug into the tops of the modules are likely to be removed. Avoid leaving a hazardous-area connector in a position where it may inadvertently contact non-IS circuits that are nearby. Prevent this by providing some form of temporary mechanical method of securing the connector so that it cannot come into contact with the non-IS circuits:

d) By plugging the connector into an MTL4599 dummy isolator

e) By using a tiewrap to constrain the connector in a safe position.

7.2 Fault finding

When fault finding, carry out the following steps as far as is necessary:–

7.2.1

Check that one of the backplane power LEDs is ON.

7.2.2

If a power LED is not on, check the power supply fuse and if necessary, change it. Ratings are:–

f) 4/8-way backplanes 1A (Spare fuse kit FUS1.0ATE5)

g) 16-way backplanes 2A (Spare fuse kit FUS2.0ATE5)

h) 24/32-way backplanes 4A (Spare fuse kit FUS4.0ATE5)

7.2.3

Check that all modules with power (PWR) LEDs are ON.

With the MTL4532, MTLx573, MTL4575 & MTL4576 models, a flashing LED indicates alarm or fault conditions - refer to section 8. Note: The LED may also flash during intermediate stages of configuration.

7.2.4

Exchange potentially faulty modules for working units as follows:–

a) Unplug the hazardous-area connectors.

b) Unplug the module from the backplane.

c) Plug the replacement unit into the backplane.

d) Replace the hazardous-area connectors.

7.2.5

Potentially faulty modules should be tested in workshop conditions, using the following procedure:–

a) Connect a power supply to a spare CPS backplane (refer to sections 4.4.2 or 4.4.4).

b) Plug the suspect module into any position on the backplane.

c) Carry out the appropriate test procedure described in Section 8 for the particular module.

7.3 Routine maintenance

Check the general condition of the installation occasionally to make sure that no deterioration has occurred. Carry out the following at least once every two years and more frequently for particularly harsh environments:–

a) Check that modules are of the types specified in the relevant documentation and that they are mounted in the correct positions on the associated backplanes.

b) Check that modules and hazardous-area connectors are correctly and legibly tagged, that the connectors are plugged into the matching modules and that the tag details given comply with the relevant documentation.

c) Check that modules and hazardous-area connectors are securely plugged into their matching sockets.

d) Check that all connections to the backplane and to the hazardous-area connectors are properly made.

e) Check that connecting cables to backplanes and to hazardous-area connectors are of the specified type and rating, are correctly routed and segregated (particularly in Eaton enclosures), and are not frayed or otherwise damaged.

f) Check that cable screens are properly earthed.

Note: It is strongly recommended that only the tests (described in Section 8) and routine maintenance (described here) should be undertaken by users. If a module is faulty, DO NOT attempt to make repairs or modifications as these may affect the intrinsic safety of the module. All faulty units should be returned to the Eaton's MTL product line or representative from which they were purchased, for repair or replacement.

Any faulty backplanes supplied by us should also be similarly returned.

8 BENCH TESTING MODULES

The following methods have been devised to permit the user to perform simple module tests on the bench and confirm basic in put to output operation. Field units that do not perform as described below, or modules that have 'unusual' operating behaviour, should be replaced and returned to us.

Consult individual module wiring diagrams for terminal connections.

Unless stated specifically, the module will require dc power, as if under normal operating conditions.

8.1 Digital Input (DI) modules

8.1.1 Modules: MTL4501-SR, MTL4504, MTL4510, MTL4510B, MTL4511, MTL4513, MTL4514, MTL4514B, MTL4514N, MTL4516, MTL4516C, MTL4517

Input Conditions

1. Connect the appropriate input test circuit to the channel under test (see **Figure 8.1** & **Table 8.1**).
2. For multi-channel modules with LFD, connect a 22kΩ resistor across the other channel input(s) to prevent the signalling of an unwanted open-circuit line fault.
3. Where appropriate test with phase reversal switch in both OFF and ON conditions.

Figure 8.1: DI input test circuit

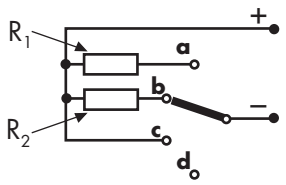

Model	Resistor values	Switch – simulation conditions
MTL4501-SR	R_1 = 10kΩ, R_2 = 1k4Ω	a) **Normal** - field switch open b) **Normal** - field switch closed c) **Line Fault** - Test for short circuit d) **Line Fault** - Test for open circuit
MTL4504 MTL4510/4510B MTL4511 MTL4513 MTL4514x MTL4516 MTL4516C MTL4517	R_1 = 22kΩ, R_2 = 680Ω	

Table 8.1 Input test conditions

Output Results

1. For MTL4510 and MTL4510B modules refer to pages 18-21 of this manual.
2. The phase reversal switch will reverse the channel output conditions, but not the LFD.
3. With LFD disabled (OFF) the Status LED should respond as shown in Table 8.2.
4. With LFD disabled (ON) the LEDs and relay should respond as shown in Table 8.3.

Input switch positions	Channel contacts		Status LED
	NC	NO	
a	Closed	Open	OFF
b	Open	Closed	ON
c	Open	Closed	ON
d	Closed	Open	OFF

NOTE	MTL4514N	Contacts
Channel	Closed	2k2
	Open	OPEN
LFD	Closed	15k
	Open	OPEN

Table 8.2 LFD - OFF output test results

Input switch positions	Channel contacts		LEDs		LFD relay	
	NC	NO	Status	LFD	MTL450x/ MTL4514N	MTL451x
a	Closed	Open	OFF	OFF	Energised	De-energised
b	Open	Closed	ON	OFF	Energised	De-energised
c	Closed	Open	OFF	ON	De-energised	Energised
d	Closed	Open	OFF	ON	De-energised	Energised

Table 8.3 LFD - ON output test results

8.2 Digital Output (DO) modules

Apply tests per channel.

8.2.1 Loop powered: - MTL4521 & MTL4521L, MTL4521Y & MTL4523L

Figure 8.2: Loop powered DO test circuit

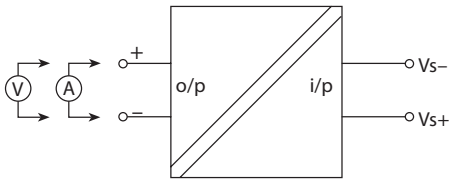

1. Connect a voltmeter between the + & – output terminals of the module, observing polarity.
2. Apply 24V between the supply terminals (Vs+, Vs–)
3. The voltmeter should indicate a value between 21.4 and 24 volts
4. Switch off the power to the module
5. Connect an ammeter between the + & – output terminals of the module, observing polarity
6. Apply 24V between the supply terminals (Vs+, Vs–)
7. The ammeter should indicate no less than 48mA (or 70mA for MTL4621)

8.2.2 Powered: - MTL4523, MTL4523R, MTL4523V, MTL4523VL, MTL4523Y, MTL4524 & MTL4524S & MTL4525

Figure 8.3: Powered DO test circuit

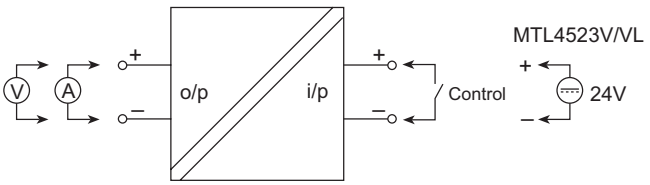

1. Connect a voltmeter between the + & – output terminals of the module, observing polarity
2. Apply 24V between the supply terminals Vs+, Vs–
3. The voltmeter should now indicate no more than 4V
4. Close the Control switch or, for the MTL4523V ot MTL4523VL apply the 24V source
5. The voltmeter should now indicate a value between 21.4 and 24 volts
6. Switch off the power to the module
7. Connect an ammeter between the + & – output terminals of the module, observing polarity
8. Apply 24V between the supply terminals (Vs+, Vs–)
9. Close the Control switch or, for the MTL4523V or MTL4523VL apply the 24V source
10. The ammeter should indicate no less than 48mA (or 70mA for equivalent MTL4600 models)

8.2.3 Relay: - MTL4526

Figure 8.4: DO test circuit for relay type

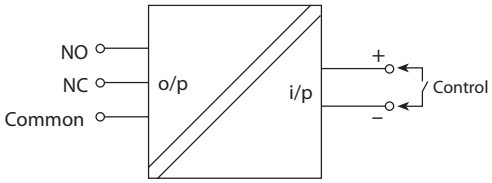

1. Set in 2-channel mode (SW1 - SW4 respectively to Off, On, On, On)
2. Confirm continuity between NC and Common
3. Apply 24V between the supply terminals Vs+, Vs–
4. Close the Control switch
5. Confirm continuity between NO and Common

8.3 Analogue Input (AI) Modules

All of these tests compare the *output* current with the *input* current (A1) over the normal range of operation, and measure the "error current" i.e. the difference - as indicated on A2. Apply these tests *per channel*, as appropriate.

Ammeter A2 must be capable of handling either polarity. If it is not an auto-ranging instrument, set it to a high range before switch on, then adjust sensitivity to obtain the required reading.

8.3.1 Modules: MTL4541, MTL4541B/P/T, MTL4541Y, MTL4544, MTL4544B & MTL45544D

Figure 8.5:
AI test circuit #1

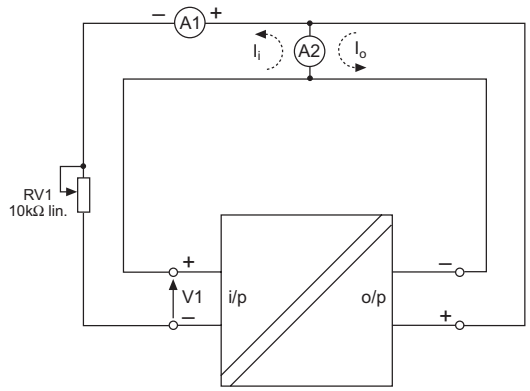

Output Measurements

Note: Do not connect a voltmeter in circuit to measure V1 until requested in Step 4 below, because current measurement A2 could be affected.

1. Adjust RV1 to vary the current (A1) through the range 4 to 20mA
2. The measured current imbalance (A2) over this range should not exceed ± 20μA
3. Adjust RV1 for a 20mA reading on A1
4. The voltage V1, across the channel input, should typically be >16.5V.

8.3.2 Modules: MTL4541S, MTL4544S & MTL4561

Figure 8.6:
AI test circuit #2
"o/p sinking"

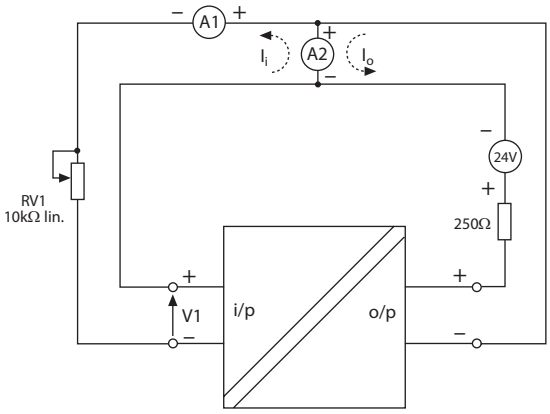

Output Measurements

Note: Do not connect a voltmeter in circuit to measure V1 until requested in Step 4 below, because current measurement A2 could be affected. Set A2 range to

1. Adjust RV1 to vary the current (A1) through the range 4 to 20mA.
2. The measured current imbalance (A2) over this range for the MTL4541S and the MTL4544S should not exceed ± 20μA. For the MTL4561 the imbalance should not exceed ± 400μA.
3. Adjust RV1 for a 20mA reading on A1
4. The voltage V1, across the channel input, should typically be >16.5V.

8.3.3 Modules: MTL4541A, MTL4541YA & MTL4544A

Figure 8.7:
AI test circuit #3
"active i/p"

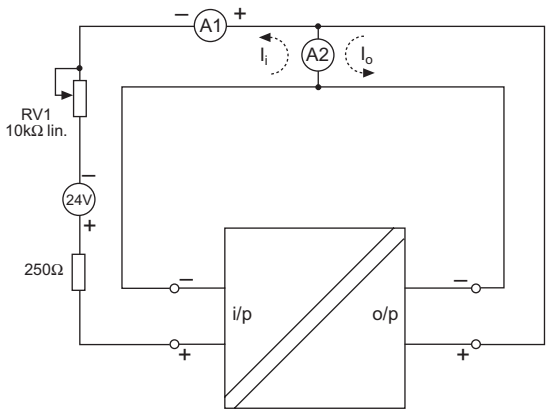

Output Measurements

1. Adjust RV1 to vary the current (A1) through the range 4 to 20mA.
2. The measured current imbalance (A2) over this range should not exceed ± 20µA

8.3.4 Modules: MTL4541AS & MTL4544AS

Figure 8.8:
AI test circuit #4
"active i/p - o/p sinking"

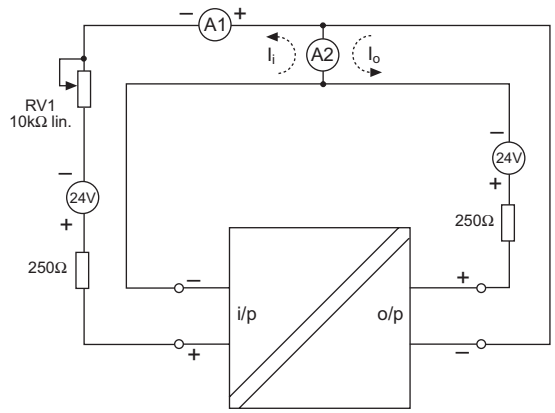

Output Measurements

1. Adjust RV1 to vary the current (A1) through the range 4 to 20mA.

8.3.5 The measured current imbalance (A2) over this range should not exceed ± 20µA

8.3.6 Module: MTL4581

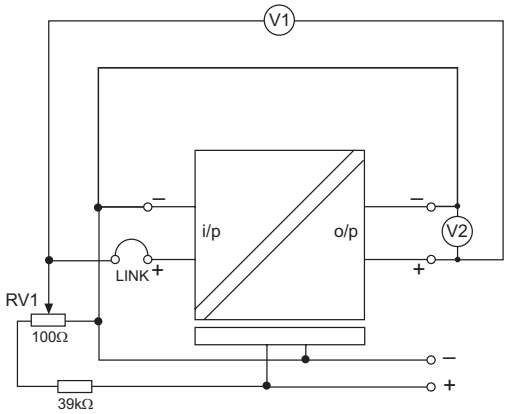

Figure 8.9:
AI test circuit #5
"mV input"

Note: V1 should be capable of measurement to within 1μV.

Output Measurements

1. With the LINK connected, vary output V2 between 0 and 50mV using RV1. V1 should show <50μV variation. (*Note: Safety Drive can be ON or OFF*)
2. With the LINK disconnected and Safety Drive ON, V2 should drive to >+50mV with the switch set to '+', or <–50mV with the switch set to '–'.

8.4 Analogue Output (AO) Modules

The test compares the output current with the input current over the normal range of operation.

8.4.1 Modules: All variants

Input Conditions

The chosen "load" resistor can be any value between 100 and 800Ω.

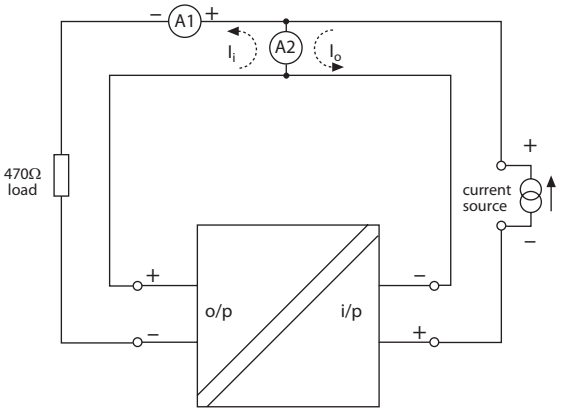

Figure 8.10:
AO test circuit

Output Measurements

1. Adjust the current source to vary the current (A1) through the range 4 to 20mA.
2. The measured current imbalance (A2) over this range should not exceed ± 20μA.

8.5 Testing the functioning of other modules

Simple tests to verify their basic operation can be devised for other modules (e.g. temperature, pulse, vibration, etc). If any assistance is required for the testing of a particular module, please contact the technical support department at Eaton for advice.

8.5.1 Testing

Make the safe- and hazardous-area connection shown in figure 8.12.

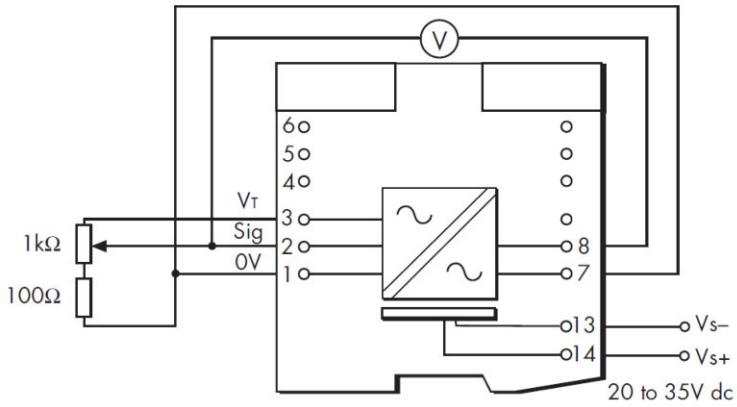

Figure 8.11: Test circuit for MTL4531

Measure the voltage on terminal 3 with respect to terminal 1; this should be >19V. Vary the potentiometer setting and check that the reading on voltmeter V varies by no more than ±100mV.

9 APPLICATIONS INVOLVING ZONE 2 AND/OR ZONE 22 HAZARDOUS AREAS

IMPORTANT: *See the front of this manual for important additional information regarding the use of these products in countries governed by the ATEX Directive.*

The European Community permits Category 3G equipment, such as the MTL4500 range, to be installed in, or connected to, Zone 2 flammable atmospheres provided it meets the requirements of the ATEX Directive.

MTL4500 Category 3 products have been designed to meet, and carry approval markings for, Ex nC and/or Ex nA.

In general, meeting the relevant requirements of the appropriate European (CENELEC) standards is considered the most appropriate method of demonstrating compliance with the ATEX directive. However, Eaton often has its products approved by other national bodies, such as FM and CSA and, because national, European, and international standards are converging, it is generally possible to use other national approvals as supporting evidence for the ATEX Technical File.

In the context of this document, Zone 2 (Division 2) and Zone 22 hazardous areas are those that may become potentially explosive through the presence of flammable gases, vapours and dusts for periods of up to 10 hours per year. It is recommended that the current version of the standards is consulted for detailed information on the requirements applicable to the particular installation.

As a consequence of their IS approvals, MTL4500 products *may also be connected into* Zone 22 hazardous areas. Consult individual module approvals for further details.

Unless otherwise specified, the following ambient conditions apply:

Ambient Temperature range	–20°C to +60°C
Pollution Degree 2	(See EN 61010-1)
Measurement Category II	(See EN 61010-1)

9.1 Enclosure

EN 60079-15 specifies the minimum required degree of protection to be IP54, but generally this is provided by the external enclosure in which the product is mounted.

The user must refer to the specific certificates relating to the products being installed within the hazardous area to check that all special conditions of safe use have been complied with.

10 APPENDIX:

10.1 Table A - Safety descriptions

All models are Um = 253V

Model No.	Terminals/ Bornes/Klemme/ Terminales	U_o (V)	I_o (mA)	P_o (mW)
MTL4501-SR		9.7	30	70
MTL4504/ MTL4510 / MTL4510B/ MTL4511 / MTL4513/ MTL4514 MTL4514B/ MTL4514D /MTL4516 MTL4516C / MTL4517		10.5	14	37
MTL4521/ MTL4521Y		25	147	920
MTL4521L		25	108	680
MTL4523/ MTL4523L MTL4523R/ MTL4523V		25	147	920
MTL4523VL		25	108	680
MTL4524/ MTL4524S		25	147	920
MTL4525		25	83.3	521
MTL4526	1 → 3, 4 → 6	Non-energy storing *		
MTL4531	3 → 1	26.6	94	660
	3 → 2	1.1	0.1	0.03
MTL4532	2 → 1, 6 → 1	10.5	14	37
	3 → 1	1.1	53	15
	4 + 3 → 1	28	93 @ 28V 146 @ 2.9V	650
	5 + 4 → 1	28	9	650
	config †	U_o = 8 U_i = 9.1	15	27
MTL4541/ MTL4541B		28	93	651
MTL4541A/ MTL4541AS		8.6 (diode)	–	–
MTL4541P		28	116.6	820
MTL4541S		28	93	651
MTL4541T		22	167	920
MTL4544/ MTL4544B/ MTL4544D MTL4544S		28	93	651
MTL4544A/ MTL4544AS		8.6 (diode)	–	–
MTL4546/ MTL4546C /MTL4546Y MTL4549/ MTL4549C/ MTL4549Y		28	93	651
MTL4546S		22	100	0.55
MTL4561		28	93	651
MTL4573/ MTL4573Y	1+2+3+4+5+6	6.6	76	130
	3 → 1	Non-energy storing *		
	3,2 & 1	6.6	10	17
	config †	U_o = 8 U_i = 9.1	14.6	26
MTL4575	1+2+3+4+5+6	6.6	76	130
	3 → 1	Non-energy storing *		
	3,2 & 1	6.6	10	17
	config †	U_o = 8 U_i = 9.1	14.6	26
MTL4576	1,2 & 3, 4,5,& 6	6.6	28	46.2
	3 → 1, 6 → 4	Non-energy storing *		
	config †	U_o = 5.88 U_i = 9.1	12	17.7
MTL4581		U_o = 1.1 U_i = 28	I_o = 53 I_i = 120	15
MTL4582B	1+2+3+4 & 5	6.51	16	16.1
	1, 3 & 4	6.51	6	9.2
	3 → 1	U_o = 1.2 U_i = 5	4	1.2
	config †	U_o = 1.2 U_i = 5	12	17.7

* Appareil ne stockant pas d'energies / Betriebsmittel ohne energiespeicherung / Aparatos que no almacenan energia (≤ 1.5V; ≤ 0.1A; ≤ 25mW)

† config - configuration socket / fiche de configuration / konfigurationssocket / toma con configuración

Note: Certificate IECEx TSA 20.0021 only includes models MTL4501-SR, MTL4514D, MTL4526, MTL4531, MTL4532, MTL4533, MTL4541A, MTL4541AS, MTL4541S, MTL4544A, MTL4544AS, MTL4544D, MTL4544S, MTL4561, MTL4573, MTL4573Y, MTL4576, MTL4581 and MTL4582B.

10.2 Table B – Maximum cable parameters

Model No.	Terminals/ Bornes/ Klemme/ Terminales	Group/Groupe/Gruppe/Grupo I			Group/Groupe/Gruppe/Grupo IIB / IIIC			Group/Groupe/Gruppe/Grupo IIC		
		C (µF)	L (mH)	L/R (µH/Ω)	C (µF)	L (mH)	L/R (µH/Ω)	C (µF)	L (mH)	L/R (µH/Ω)
MTL4501-SR		320	501	6,414	24	145	1,829	3.5	39	475
MTL4054/ MTL4510 MTL4510B/ MTL4511 MTL4513/ MTL4514 MTL4514B/ MTL4514D MTL4516/ MTL4516C MTL4517		95	1000	1,333	16.8	680	1333	2.41	175	983
MTL4521		4.87	20.2	478	0.84	7.2	159	0.11	1.4	40
MTL4521L		4.87	40.0	691	0.84	12.19	210	0.11	3.04	52
MTL4523/ MTL4523L MTL4523R/ MTL4523V		4.87	20.2	478	0.84	7.2	159	0.11	1.4	40
MTL4523VL		4.87	40.0	691	0.84	12.19	210	0.11	3.04	52
MTL4524/ MTL4524S		4.87	20.2	478	0.84	7.2	159	0.11	1.4	40
MTL4525		4.87	64.9	814	0.84	21.8	254	0.11	5.3	68
MTL4526	1 → 3, 4 → 6	-	-	-	-	-	-	-	-	-
MTL4531	3 → 1	4.27	52.81	746	0.73	16.09	227	0.094	4.02	56
	3 → 2	1,000	1,000	1,000	1,000	1,000	1,000	100	1,000	1,000
MTL4532	2 → 1, 6 → 1	95.0	1,000	1,333	16.8	725.6	1,333	2.41	181.4	967
	3 → 1	1,000	166.1	32,018	1,000	50.6	9,757	100	12.6	2,439
	4 + 3 → 1	3.76	21.8	668	0.65	6.67	210	0.083	1.66	55
	5 + 4 → 1	3.76	52.8	668	0.65	16.0	210	0.083	4.02	55
	config †	12.32	797.5	1,484	2.15	243.0	1,441	0.367	60.7	360
MTL4533	3 → 1, 6 → 4	4.27	52.81	746	0.73	16.09	227	0.094	4.02	56
	3 → 2, 6 → 5	1,000	1,000	1,000	1,000	1,000	1,000	100	1,000	1,000
MTL4541/ MTL4541S	2 → 1, 5 → 4	3.76	53.7	668	0.65	12.6	210	0.083	4.2	56
MTL4541B/ MTL4544	3 → 1, 6 → 4	1,000	156.2	28,229	1,000	47.8	8,932	100	12.8	2,438
MTL4544B/ MTL4544D MTL4544S	2 → 3, 5 → 6	3.76	59.1	710	0.65	20.2	222	0.083	4.9	59
MTL4541A/ MTL4541AS	2 → 1, 5 → 4	1,000	65.82	17,740	55	20.06	5,406	6.2	5.01	1,351
MTL4544A/ MTL4544AS	2 → 1, 5 → 4	1,000	65.82	17,740	55	20.06	5,406	6.2	5.01	1,351
	501 (Ch 1&2 series)	12.16	65.82	8,870	2.11	20.06	2,703	0.36	5.01	675
MTL4541P	2 → 1	3.76	33.5	545	0.65	11.8	175	0.083	2.7	45
MTL4541T	2 → 1	6.00	16.4	517	1.14	5.5	147	0.165	0.91	39
MTL4544A/ MTL4544AS		12.16	65.82	8,870	2.11	20.06	2,703	0.36	5.01	675
MTL4546S	2 → 1	6.00	44.3	848	1.14	14.6	258	0.165	3.55	64
MTL4546/ MTL4546C MTL4546Y/ MTL4549 MTL4549C/ MTL4549Y MTL4561	2 → 1, 5 → 4	3.76	53.7	668	0.65	12.6	210	0.083	4.2	56
MTL4573/ MTL4573Y	1+2+3+4+5+6	1,000	77.2	3,402	500	25.6	1,057	22	6.42	288
	config †	12.32	1,000	1,453	2.15	591	1,355	0.367	153	349
MTL4575	1+2+3+4+5+6	1,000	77.2	3,402	500	25.6	1,057	22	6.42	288
	config †	12.32	1,000	1,453	2.15	591	1,355	0.367	153	349
MTL4576	1 to 4	1,000	264.5	6,363	500	80.6	2,052	22.0	20.1	513
	1,2 & 3 4,5 & 6	500	297.6	2,121	250	90.7	1,537	11.0	22.6	384
	3 → 1, 6 → 4	500	500	1,666	500	500	1,666	50	500	1,666
	config †	15.8	1,000	1,412	2.88	317.9	1,412	0.478	79.4	448
MTL4581		1,000	155.7	28,229	1,000	47.3	8,932	100	12.3	2,438
MTL4582B	1, 3, 4 & 5	1,000	1,000	1,536	500	1,000	1,536	22.0	355.5	1,536
	1, 3 & 4	1,000	1,000	921	500	1,000	921	22.0	987.6	921
	3 → 1	1,000	1,000	3,333	1,000	1,000	3,333	100	1,000	3,333
	config †	15.8	1,000	1,412	2.88	317.9	1,412	0.478	79.4	448

† config - configuration socket / fiche de configuration / konfigurationssocket / toma con configuración

Note: Certificate IECEx TSA 20.0021 only includes models MTL4501-SR, MTL4514D, MTL4526, MTL4531, MTL4532, MTL4533, MTL4541A, MTL4541AS, MTL4541S, MTL4544A, MTL4544AS, MTL4544D, MTL4544S, MTL4561, MTL4573, MTL4573Y, MTL4576, MTL4581 and MTL4582B.

This page is left intentionally blank

CROUSE-HINDS
SERIES

EATON Crouse-Hinds series

The safety you rely on.

See the complete MTL product portfolio at **www.mtl-inst.com**

For more information:
If further assistance is required, please contact an authorised MTL Distributor, Sales Office, or Customer Service Department

https://www.mtl-inst.com/contact

Eaton Electric Ltd
Great Marlings, Butterfield, Luton
Beds LU2 8DL

Tel: +44 (0) 1582 723633 Fax: +44 (0)1582 422283
E-mail: mtlenquiry@eaton.com
www.mtl-inst.com

Powering Business Worldwide

Eaton Electric Limited,
Great Marlings, Butterfield, Luton
Beds, LU2 8DL, UK.
Tel: + 44 (0)1582 723633 Fax: + 44 (0)1582 422283
E-mail: mtlenquiry@eaton.com
www.mtl-inst.com

© 2024 Eaton
All Rights Reserved
Publication No. INM 4500/4600 Rev 14 090224
February 2024

EUROPE (EMEA):
+44 (0)1582 723633
mtlenquiry@eaton.com

THE AMERICAS:
+1 800 835 7075
mtl-us-info@eaton.com

ASIA-PACIFIC:
+65 6 645 9888
sales.mtlsing@eaton.com

The given data is only intended as a product description and should not be regarded as a legal warranty of properties or guarantee. In the interest of further technical developments, we reserve the right to make design changes.