MTL SUM5™

Smart Universal Marshalling

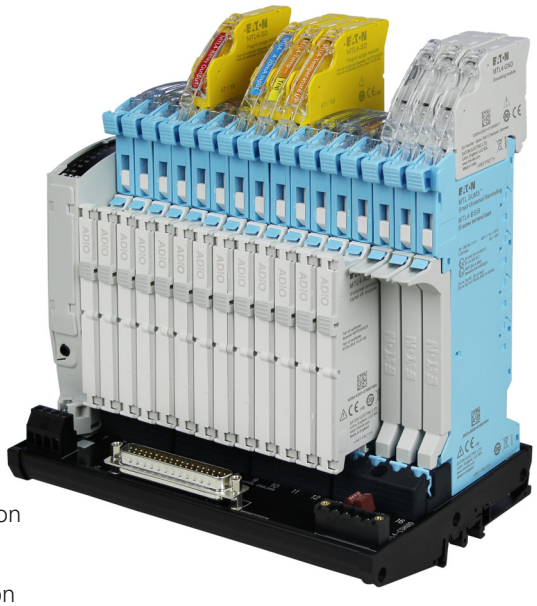

- **Intrinsically safe isolators**
- **Signal conditioning**
- **Relay interfaces**
- **Surge protection**
- **Loop disconnect**

- ALL modes of operation
- Fully configurable
- HART compatible
- Line diagnostics
- High packing density
- Hot swappable
- PC or manual configuration
- Zone 2 mounting
- Control system integration

Eaton's new generation of IS and general purpose signal conditioning is the perfect choice for use with all generations of control systems from traditional dedicated IO types to the latest universal interfaces. System cabinet design can be standardised with the knowledge that ALL signal types can be handled by this truly universal interface.

The backplane mounting MTL SUM5 range is the perfect choice for all control systems allowing direct integrated cable connections and removing the need for additional signal conditioning. Each channel can be configured as an input or an output with a choice of operating modes to directly match those of the system. When used with universal control cards, these channels may be changed to another function at any time if desired.

Signal and system diagnostics are a key feature offering the user fast and precise identification of faults with the system or the field equipment.

The modular approach offers the user the ability to fully standardise the cabinet design with the highest possible packing density saving costs for control rooms and infrastructure. With up to 768 loops possible in a double sided 800x800mm cabinet, significant space savings can be achieved.

The integrated surge protection removes the need for extra space and wiring and can be fitted only on the loops where it is required, either before or after the system is installed and commissioned, saving upfront costs where surge requirements are not known.

Field wiring is landed directly on the interface terminals. The built in loop disconnect feature, with the universal signal handling, eliminates the need for marshalling panels. Spare wiring can also be landed without the electronics fitted, to provide for future expansion.

Powering Business Worldwide

Eaton Electric Limited,
Great Marlings, Butterfield, Luton
Beds, LU2 8DL, UK.
Tel: + 44 (0)1582 723633 Fax: + 44 (0)1582 422283
E-mail: mtlenquiry@eaton.com
www.eaton.com

© 2024 MTL
All Rights Reserved
Publication No. EPS MTL SUM5™ rev 4 310724
August 2024

MTL4-ADIO Configurable Isolator

1 channel for analogue and digital inputs and outputs

The MTL4-ADIO can be configured for input and output applications with a wide selection of signal types and ranges. It is the perfect choice when used with universal IO system cards where the IO type is assigned on a channel by channel basis. Configuration is carried out using the mode selection switch on the module or using the MTL4-PCS configuration tool via the MTL4-PCL USB link.

The MTL4-BSIS terminal base unit is required for IS applications. This contains the safety components for explosion protection. Fitting LK1 offers the user an increased power setting for suitably certified devices.
The MTL4-BSGP terminal base is used for safe area applications.

For high level surge protection on channels the MTL4-SD module option is plugged into the top of the base unit. When the surge module is fitted, the carrier provides a high integrity earth (ground) connection.

A range of 16 way carriers are available for these modules. In addition to a screw terminal version for general use there are models to support multicore cable connections for control system integration. Each carrier also offers facilities for module configuration with process and diagnostic alarm outputs.

Terminal	Current Source Mode
1	Field V out 10V
2	Input / Output
3	Field Common
4	Field Power + 26.5V
A	V out
B	Input / Output
C	System Common

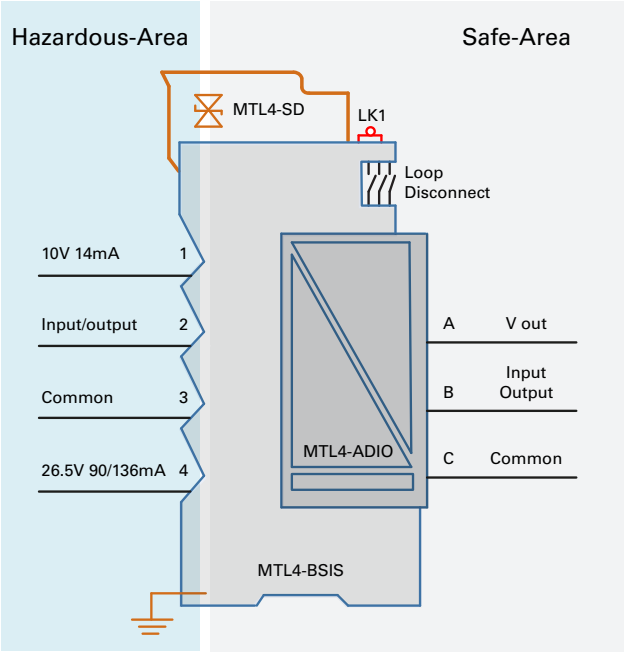

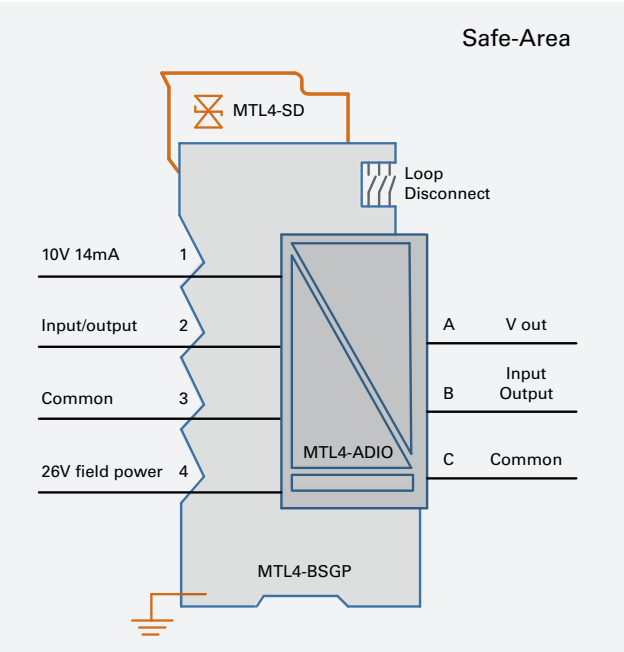

SPECIFICATION	MTL4-BSIS IS terminal base	MTL4-BSGP General purpose terminal base
Number of channels	One with fully floating input and output	One with fully floating input and output
Location of field equipment	Zone 0, IIC, T4-6 hazardous area if suitably certified	Hazardous area if suitably certified Safe-area
Input signal from Field	0-22mA, 4-20mA,0-5V, 0-10V, switch, NAMUR prox.	0-22mA, 4-20mA,0-5V, 0-10V, switch, NAMUR prox.
Output signal to System	0-22mA, 4-20mA, sink/source, 0-5V, 0-10V, switch, N+1 repeat	0-22mA, 4-20mA, sink/source, 0-5V, 0-10V, switch, N+1 repeat
Output signal to Field	4-20mA, 48mA, 1-5V, 0-10V	4-20mA, 48mA, 1-5V, 0-10V
Input signal from System	4-20mA, 5V, 0-10V, contact input, 24V logic	4-20mA, 0-5V, 0-10V, contact input, 24V logic
Communication supported	HART on analogue 4-20mA	HART on analogue 4-20mA
Analogue Input (Field device to cont. system)	3.6 - 23mA, including over-range 3.8mA to 20.5mA if NAMUR selected Input impedance for HART signals >230Ω Passive input impedance (terminals 2 and 3) 100ohms or 230Ω if HART configured. Transmitter voltage 13.2V @ 20mA HART mode (-40°C to + 70°C) Transmitter voltage 15.2V @ 20mA LK1 fitted non-HART mode Safe area output load resistance source mode 0 to 420Ω Safe area output load resistance sink mode 0 to 600Ω Safe area output impedance >1MΩ	3.6 -23mA, including over-range 3.8mA to 20.5mA if NAMUR selected Input impedance for HART signals >230Ω Passive input impedance (terminals 2 and 3) 100ohms or 230Ω if HART configured. Transmitter voltage 17.2V @ 20mA HART mode Safe area output load resistance source mode 0 to 420Ω Safe area output load resistance sink mode 0 to 600Ω Safe area output impedance >1MΩ
Analogue Output	Range 0-25mA Maximum load resistance 600Ω(13.2V@20mA) -40°C to +70°C Output resistance >1MΩ Input characteristics Normal <6V, open circuit <0.5mA Response time – settles within 200µA of final value <100ms Communication supported - HART 4-20mA	Range 0-25mA Maximum load resistance 800Ω(17.2V@20mA) Output resistance >1MΩ Input characteristics Normal <6V, open circuit <0.5mA Response time – settles within 200µA of final value <100ms Communication supported - HART 4-20mA
Digital Input	Sensor voltage 7 to 9V dc through 1kΩ Normal phase Output closed if input>2.1mA, (<2kΩ in input circuit) Output open if <1.2mA, (>10kΩ in input circuit) Hysteresis 200µA Max switching frequency 5kHz Channel status Yellow LED on when output energised Line fault detection (LFD), when selected Open circuit alarm ON if I_{in}<50µA Open circuit alarm OFF if I_{in}>250µA Short circuit alarm ON R_{in} <100Ω Short circuit alarm OFF R_{in} >360Ω LFD alarm indication, Yellow flashing status LED when in alarm	Sensor voltage 7 to 9V dc through 1kΩ Normal phase Output closed if input>2.1mA, (<2kΩ in input circuit) Output open if <1.2mA, (>10kΩ input circuit) Hysteresis 200µA Max switching frequency 5kHz Channel status Yellow LED on when output energised Line fault detection (LFD), when selected Open circuit alarm ON if I_{in}<50µA Open circuit alarm OFF if I_{in}>250µA Short circuit alarm ON R_{in} <100Ω Short circuit alarm OFF R_{in} >360Ω LFD alarm indication, Yellow flashing status LED when in alarm 24-110V ac/dc using MTL4 - BSGPR base. Response time 20ms
Pulse Input	Input signals 0 – 25kHz pulse to pulse mode, Min pulse width 20µs NAMUR / contact, voltage pulse, current pulse Voltage 5V, 10V or programmable 1-10V Current pulse 4-20mA, 12mA threshold Output signals Solid state switch, voltage 0/24V, programmable 0.1-10kHz NAMUR pulse to analogue mode, 4-20mA output	Input signals 0 – 25kHz pulse to pulse mode, Min pulse width 20µs NAMUR / contact, voltage pulse, current pulse Voltage 5V, 10V or programmable 1-10V Current pulse 4-20mA, 12mA threshold Output signals Solid state switch, voltage 0/24V, programmable 0.1-10kHz NAMUR pulse to analogue mode, 4-20mA output

SPECIFICATION	MTL4-BSIS IS terminal base	MTL4-BSGP General purpose terminal base
Digital Output	Control Input - Switch contact or Voltage Switch input – Voltage source 10V, 1.5mA max Output On – voltage at input <2V Output Off – Voltage at input >3V Voltage input – 0 / 5-24V Output On – voltage at input >3V Output Off – voltage at input <2V Minimum Output voltage - 22.5V open circuit 7.5V @ 45mA 90mA safety setting 12.4V @48mA 136mA safety setting – LK1 fitted Minimum Output current - 48mA LFD detection signal (when enabled) 5V 6ms pulse, interval 500ms, channel off' LFD signal to system side >100kΩ, LFD clear 1.5mA max load on system	Control Input - Switch contact or Voltage Switch input – Voltage source 10V, 1.5mA max Output On – voltage at input <2V Output Off – Voltage at input >3V Voltage input – 0 / 5-24V Output On – voltage at input >3V Output Off – voltage at input <2V Minimum Output voltage - 22.5V open circuit 22.5V @ 45mA Minimum Output current - 48mA LFD detection signal (when enabled) 5V 6mS pulse, interval 500mS, channel off' LFD signal to system side >100kΩ, LFD clear 1.5mA max load on system
Response time	<1ms	<1ms
Transfer accuracy analogue modes at 20°C	Current ±20µA 5V±20mV, 10V±30mV	Current ±20µA 5V±20mV, 10V±30mV
LED indication	2, module status and signal status	2, module status and signal status
Temperature drift	<0.01% /°C	<0.01% /°C
Power supply voltage	20V to 30Vdc Power supply approved to IEC/EN60950, IEC/EN61010 or other technical equivalent standard (i.e. providing SELV or PELV supply)	20V to 30Vdc Power supply approved to IEC/EN60950, IEC/EN61010 or other technical equivalent standard (i.e. providing SELV or PELV supply)
Power supply current	45mA @ 24V, with 20mA signal in analogue mode 100mA @ 24V, in digital output mode	45mA @ 24V, with 20mA signal in analogue mode 100mA @ 24V, in digital output mode
Maximum power dissipation within unit	<0.7W DI, <1.1W AI/AO, <1.4W DO	<0.7W DI, <1.1W AI/AO, <1.4W DO
Safety description (using MTL4 - BSIS)	Terminals 4 to 2 & 3 U_o 26.5V, I_o 90mA, P_o 0.6W, Um 30Vdc Terminals 4 to 2 & 3 U_o 26.5V, I_o 136mA, P_o 0.9W, Um 30Vdc LK1 fitted Terminals 1 to 2 U_o 10V, I_o 14mA, P_o 35mW, Um 30Vdc	
Isolation	253V ac or dc between field and system circuits/power (tested to 1500V) 50V ac or dc between system circuits and power	253V ac or dc between field and system circuits/power (tested to 1500V) 50V ac or dc between system circuits and power
Mechanical	MTL4-BSIS + MTL4-ADIO W10mm, H156mm, D95mm (H = 190mm with MTL4 - SD fitted) Terminals, screw clamp 2.5mm² wire maximum MTL4-Cx W138mm, L195mm, D25mm DIN rail mounting 35mm top hat rail Earth - M4 ring terminal	MTL4-BSGP + MTL4-ADIO W10mm, H156mm, D95mm (H = 190mm with MTL4 - SD fitted) Terminals, screw clamp 2.5mm² wire maximum MTL4-Cx W138mm, L195mm, D25mm DIN rail mounting 35mm top hat rail Earth - M4 ring terminal
Environmental	Operating temperature (local ambient) -40°C to +70°C (carrier on horizontal rail) -40°C to +60°C (carrier on vertical rail) Note: Enclosure, carrier choice and orientation may limit operating temperature specification. Storage -40°C to +80°C Altitude - 2000m asl Humidity – 5 to 95%RH, non-condensing	Operating temperature (local ambient) -40°C to +70°C (carrier on horizontal rail) -40°C to +60°C (carrier on vertical rail) Storage -40°C to +80°C Note: Enclosure, carrier choice and orientation may limit operating temperature specification. Altitude - 2000m asl Humidity – 5 to 95%RH, non-condensing
Location of equipment	Safe area / Zone2 IIC T4 in suitably certified enclosure	Safe area / Zone2 IIC T4 in suitably certified enclosure

Connections

FIELD side connections

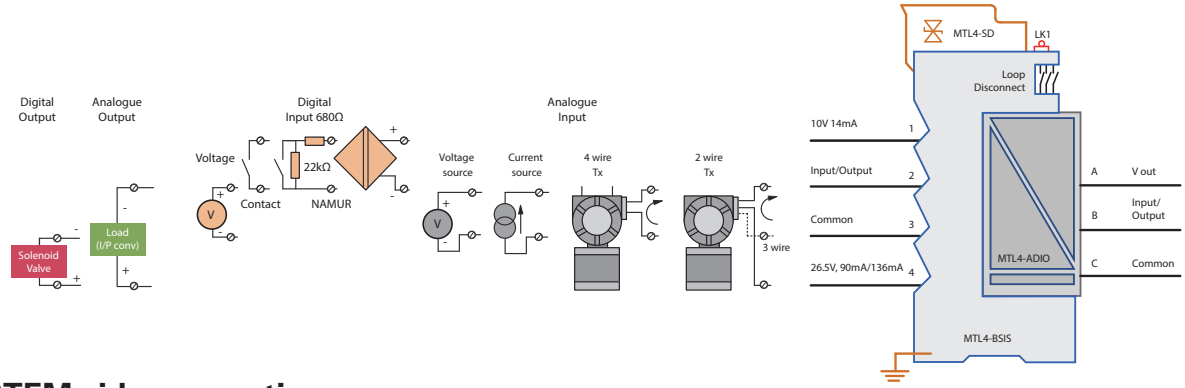

SYSTEM side connections

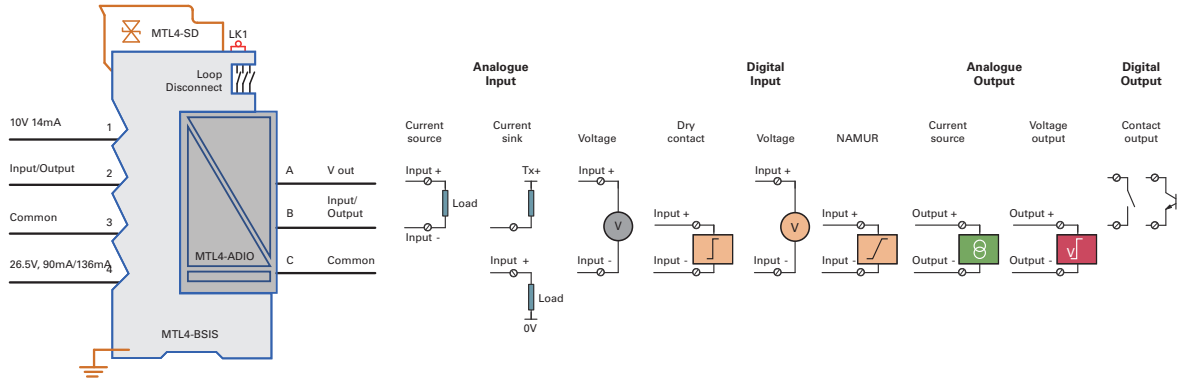

MTL4 - Digital Output Relay IS

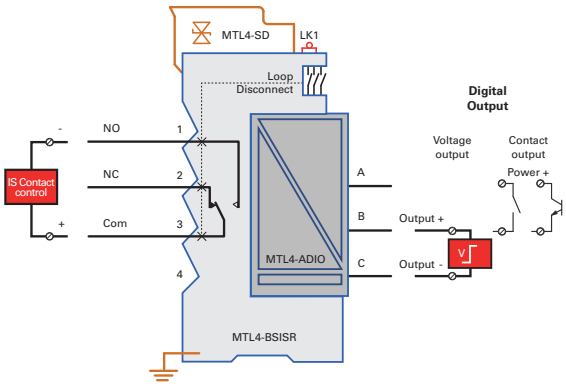

MTL4 - Digital Output Relay/ High Voltage input module

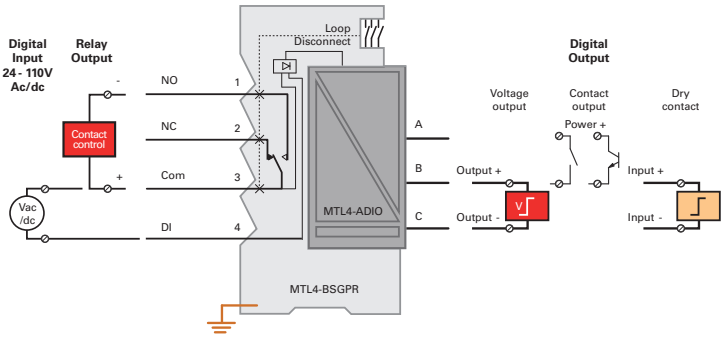

The MTL4-BSISR, for IS field devices or MTL4-BSGPR, for non-IS field devices, is used with the MTL4-ADIO isolator for digital output applications where a relay contact is required. Normally open (NO) and normally closed (NC) contacts are provided. Inductive loads must be suppressed. When using the GPR base the relay output may also be directly controlled from a 24V system output using the MTL4-BYP bypass module. Control input on terminals B+ and C-, 15mA control current.

continued on next page

SPECIFICATION	MTL4-BSISR IS terminal base	MTL4-BSGPR General purpose terminal base
Digital Relay Output	Control Input - Switch contact or Voltage Switch input – Voltage source 10V,1mA max Output On – voltage at input <2V Output Off – Voltage at input >3V Voltage input – 0 / 5-24V Output On – voltage at input >3V Output Off – voltage at input <2V Relay contacts - 30V, 0.3A max	Control Input - (via MTL4-ADIO) Switch contact or Voltage Switch input - Voltage source 10V, 1mA max Output On - voltage at input <2V Output Off - Voltage at input >3V Voltage input - 0 / 5-24V Output On - voltage at input >3V Output Off - voltage at input <2V Control Input (via MTL4-BYP) Output off - voltage input <4V Output on - voltage input >19V Relay contacts - 125Vac 0.3A max / 30Vdc 1A max.
Digital Input	n/a	20 - 120V ac/dc Response time 100ms

Dimensions

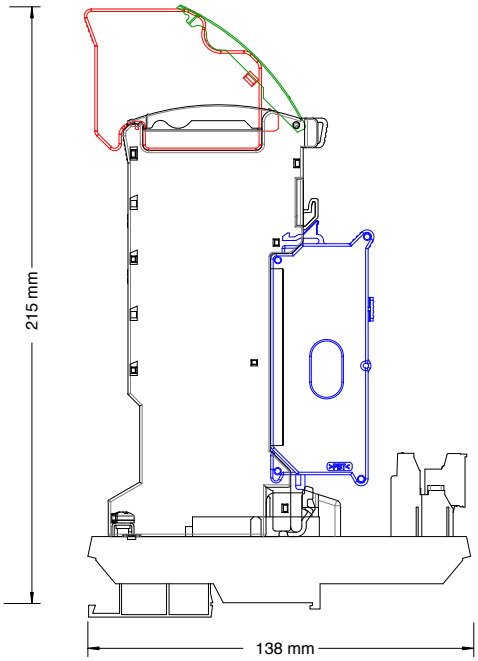

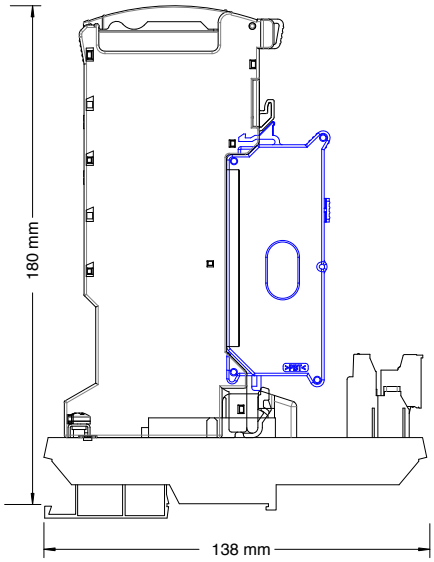

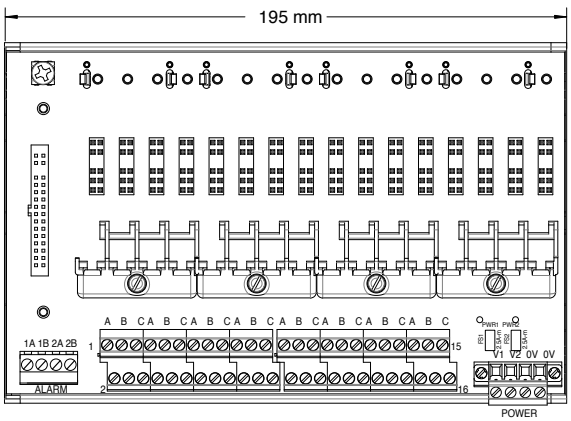

MTL4-CS16

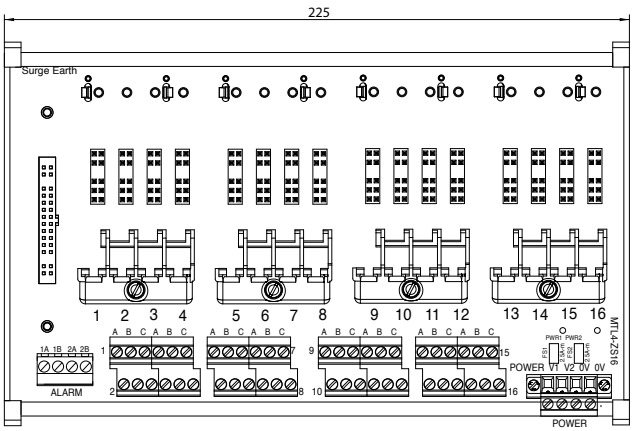

MTL4-ZS16, Zone 2 mounting

MTL4 - Universal Isolator assembly

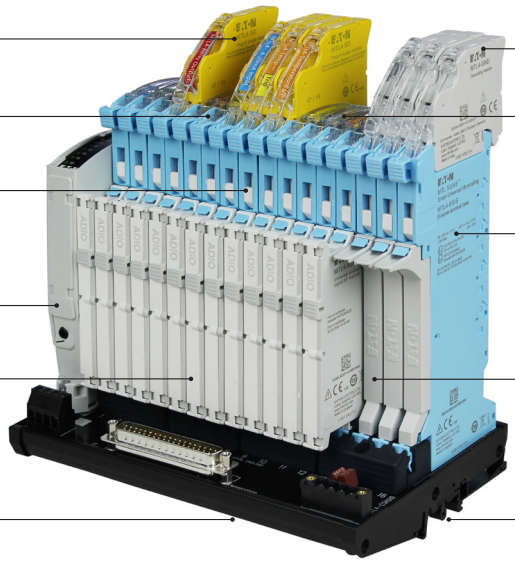

MTL4-LNKIS Jumper link, increased output power (MTL4-BSIS base only)

Link LK1, referred to in the safety parameter specification and shown on the module schematic, is the MTL4-LNKIS link and is primarily used to increase the output power from the MTL4-ADIO when being used in Digital Output mode with solenoid valves. If the solenoid is suitably certified this link may be fitted to increase the available power. It may also be used for analogue input and analogue output applications, if required, where the field device is suitably certified.

MTL4-SD surge protection

Surge protection can be added to any loops without disturbing the wiring. The MTL4-SD module is mounted onto the top of the terminal unit by rotating the tag holder out of the way and plugging it in. The tag holder can now be clipped back onto the surge module.

When using surge protection a short earth cable must be fitted between the Surge Earth terminals on the carrier and a good quality earth bar in the cabinet with a solid connection to the plant earth.

The MTL4-SD module can be removed and replaced without interrupting the process signal.

Note: The MTL4-SDR is used when surge protection is required when the MTL4-BSISR or MTL4-BSGPR terminal bases are fitted.

Surge specification

Protection

Full hybrid line to line

Each line to screen/ground

Max discharge surge current (Imax) (8/20µs)

20kA (8/20µs)

Nominal discharge surge current (i_{sn})

3kA (8/20µs)

Lightning impulse current (Iimp) (10/350µs)

2.8kA

Impulse durability (8/20µs)

10kA

Model	Nominalvoltage+(Un) (Vdc)	(Vac)	Nominal current (In)(mA)	Series resistance (Ω/line)	Max.leakage current (µA	Ratedvoltage *MCOV)(Uc)	Voltage protection level (Up)@1kV/ µs(V)	Residual voltage @ isn(V)	Bandwidth (frequency) (fG)
MTL4 - SD	32	22	400	1	5	36	<45	60	10MHz

Module configuration

The Universal Isolator is configured to select the required mode of operation for a specific channel and to provide a compatible interface to the field device and the system input/output. Mode selection is best achieved using the MTL configuration application on a PC via the configuration port on the UI carrier. For basic default mode selection a push button on the electronics module is provided without the need for a PC.

Please refer to manual for configuration options

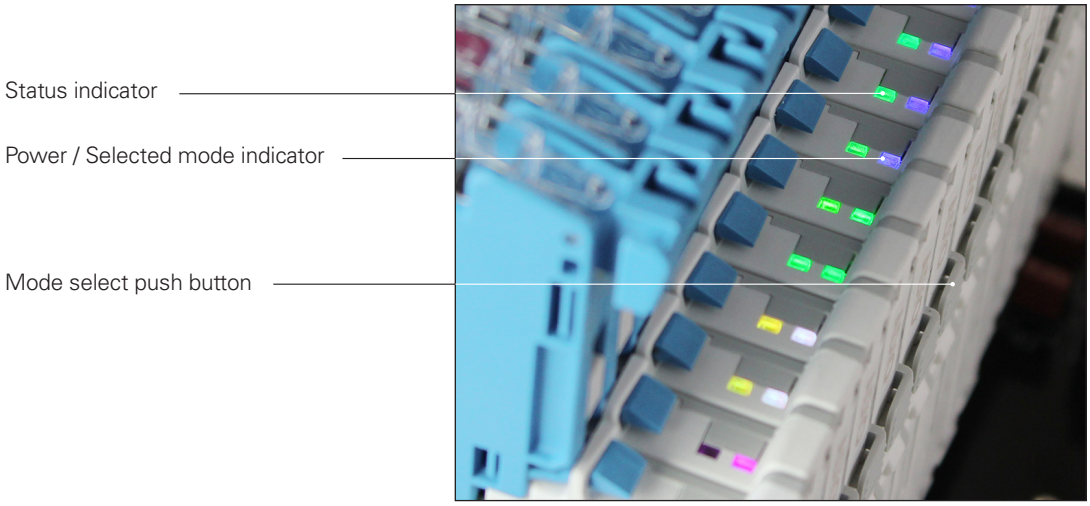

MTL4-BYP bypass module

For use in safe area applications with the MTL4-BSGP base, the MTL4-BYP module allows the user to route the signals directly from the system output to the field device.

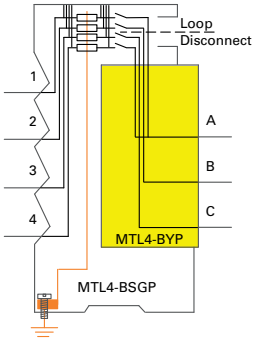

Terminal A to 1 and 4
Terminal B to 2
Terminal C to 3

Max current rating 425mA through any connection

MTL4-GND Grounding module

For use primarily to ground terminated but unused spare field wiring in IS applications. Wiring can be installed ready for future use and applied later without disturbing the operation of the system. The ground connection is made via the surge grounding point on the carrier.

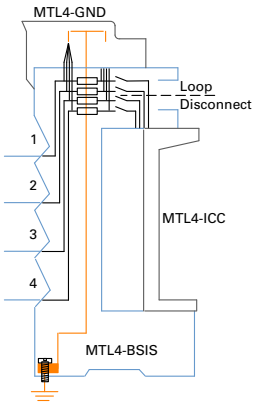

MTL4-ICC Interface connector cover

Fitted where terminal bases are installed but the channel does not have an interface module plugged in.
This cover protects the connector contacts for use in the future.
Supplied in packs of 50.

MTL4-DMA / MTL4-DMR Diagnostics and Alarm module

2 versions of this module are available, both provide the basic configuration and group alarm contact functions. 2 group alarm relay contacts are available when this unit is installed on the carrier. A diagnostic alarm for the isolator modules and a group alarm for all other alarms such as LFD and process alarms. On the top of the module are 16 LEDs that show the alarm and status of all 16 channels.

The MTL4-DMR also includes 16 relay alarm outputs, one for each channel and these can be configured to provide process alarms or LFD alarms on all signal types and trip alarms on analogues, for each individual channel. The relay connections are made via a ribbon cable connection to a remote termination board.

MTL4-DMA / DMR specifications

	MTL4-DMA	MTL4-DMR
Power dissipation @24V supply	0.9W max	1.5W max
Current consumption @24V supply	36mA max	65mA max
Group alarm relays contact rating	35V 250mA max	32V 250mA max
Channel alarm relays contact rating	N/A	32V 250mA max
Isolation, relay outputs	Functional isolation 50V	Functional isolation 50V
Isolation, serial communications	Functional isolation 50V	Functional isolation 50V
LED alarm indicators	16 tri-colour Red/yellow/green	16 tri-colour Red/yellow/green

MTL4-configuration interface

The configuration interface to a laptop is provided via a USB to serial communications cable part number **MTL4-PCL**. This is used in conjunction with the **MTL4-PCS** software which is free to download from the MTL SUM5 products web site.

The **MTL4-PCS** is installed on a Windows PC and used with the **MTL4-PCL** USB serial link that connects with the **MTL4-DMA** or **MTL4-DMR** diagnostic and alarm module which are located on the MTL SUM5 carrier.

The MTL4-DMA/DMR provide the communications link between the PC and the universal isolator modules on the carrier. Up to 16 SUM5 channels can be accessed through this link.

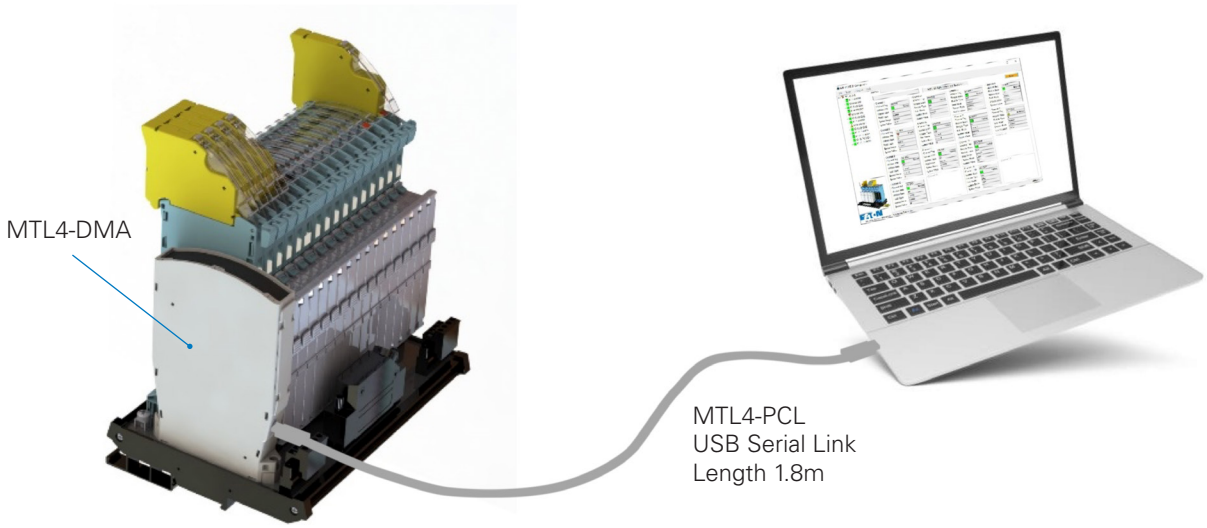

Ordering information

Interface modules	
MTL4-ADIO	Universal analogue/digital interface module
MTL4-ADIO-50	Universal analogue/digital interface module (Pack 50)
MTL4-BYP	Bypass module
MTL4-BYP-50	Bypass module (Pack 50)

Carriers with terminal bases	
MTL4-CS16IS	16ch universal IS carrier, screw terminals, 16 x MTL4 -BSIS fitted
MTL4-CS16GP	16ch universal GP carrier, screw terminals, 16 x MTL4 -BSGP fitted

Carrier only	
MTL4-CS16	16ch carrier, no interface bases fitted, screw terminals
MTL4-ZS16	16ch carrier, Zone 2 mounting, screw terminals
MTL4-CSHUIO	16ch Honeywell C300 interface.
MTL4-ZSHUIO	16ch Honeywell C300 interface, Zone 2 mounting
MTL4-UCYCVP	16ch Yokogawa N-IO interface

Terminal bases	
MTL4-BSIS	Terminal base IS
MTL4-BSISR	Terminal base IS relay
MTL4-BSGP	Terminal base GP
MTL4-BSGPR	Terminal base GP relay

Diagnostic, alarm and configuration modules	
MTL4-DMA	Diagnostic and alarm module
MTL4-DMR	Diagnostic and alarm module with 16 relay alarm outputs

Surge module	
MTL4-SD-10	Plug-in surge module (Pack 10)

Accessories	
MTL4-GND	Grounding module
MTL4-LNKIS-50	IS power jumper link (Pack50)
MTL4-TH-50	Spare UI tag holders (Pack 50)
MTL4-ICC-50	Interface connector cover, for spare module bases (Pack 50)
MTL4-PCS	Configuration software
MTL4-PCL	Configuration adaptor link
MTL4-SMK-10	Carrier surface mounting kit (Pack 10 pairs)

* For future release, consult MTL sales channel for availability

MTL SUM5™ is a registered trade mark of Eaton Electric Limited

Powering Business Worldwide

Eaton Electric Limited,
Great Marlings, Butterfield, Luton
Beds, LU2 8DL, UK.
Tel: + 44 (0)1582 723633 Fax: + 44 (0)1582 422283
E-mail: mtlenquiry@eaton.com
www.eaton.com

© 2024 MTL
All Rights Reserved
Publication No. EPS MTL SUM5™ rev 4 010824
August 2024

EUROPE (EMEA):
+44 (0)1582 723633
mtlenquiry@eaton.com

THE AMERICAS:
+1 800 835 7075
mtl-us-info@eaton.com

ASIA-PACIFIC:
+65 6 645 9888
sales.mtlsing@eaton.com

The given data is only intended as a product description and should not be regarded as a legal warranty of properties or guarantee. In the interest of further technical developments, we reserve the right to make design changes.