Safety manual
MTL intrinsic safety solutions

December 2024
SM45-55-BI Rev 9

CROUSE-HINDS
SERIES

MTL4500/MTL5500 range

Binary Input Modules

SIL 2 IEC 61508:2010 — HFT = 0
SIL 3 IEC 61508:2010 * — HFT = 1

MTL4504, MTLx511, MTL4611, MTLx514, MTLx514D, MTL4514B, MTL4514N, MTL4514X, MTL4516, MTLx516C, MTLx517

FSM FUNCTIONAL SAFETY MANAGEMENT IEC 61508:2010

FUNCTIONAL SAFETY MANAGEMENT

These products are for use as elements within a Safety System conforming to the requirements of IEC61508:2010 or IEC61511-1:2016 and enable a Safety Integrity Level of up to SIL2 to be achieved for the instrument loop in a simplex architecture.

Eaton Electric Ltd, Luton is a certified Functional Safety Management company meeting the requirements of IEC61508 Part1:clause 6

* Refer to content of this manual for details

EATON
Powering Business Worldwide

Binary Input Modules

Contents

1 Introduction 3
- 1.1 Application and function 3
- 1.2 Variant description 3
- 1.3 Product build revisions covered by this manual 4

2 System configuration 5
- 2.1 Associated system components 5

3 Selection of product and implications 5

4 Assessment of functional safety 6
- 4.1 Hardware Safety Integrity 6
- 4.2 Systematic Safety Integrity 8
- 4.3 SIL capability 8
- 4.4 EMC 8
- 4.5 Environmental 8

5 Installation 8

6 Maintenance 9

7 Appendices 9
- 7.1 Appendix A: Summary of applicable standards 9
- 7.2 Appendix B: Proof test procedure, MTL45/5500 binary input modules 10

This manual supports the application of the products in functional safety related loops. It must be used in conjunction with other supporting documents to achieve correct installation, commissioning and operation. Specifically, the data sheet, instruction manual and applicable certificates for the particular product should be consulted, all of which are available on the MTL web site.

In the interest of further technical developments, Eaton reserve the right to make design changes.

	Hardware Fault Tolerance (HFT) †	
Module type	**0**	**1**
MTL4504, MTL4511, MTL4611, MTL5511, MTL4514B, MTL5514, MTL4514N, MTL4514X, MTL4514D, MTL5514D, MTL4516C, MTL5516C, MTL4517 and MTL5517.	SIL 2 IEC 61508:2010	SIL 3 IEC 61508:2010

† These modules have an inherent fault tolerance of 0.
Duplication of modules in a voting architecture may be used to achieve HFT=1

1 INTRODUCTION

1.1 Application and function

The binary input modules that are the subject of this manual are intrinsic safety isolators that enable a safe-area load to be controlled by a proximity detector or switch located in a hazardous area of a process plant. They are also designed and assessed according to IEC 61508 for use in safety instrumented systems up to SIL2 without hardware redundancy. Higher integrity for a Safety Instrumented Function (SIF) can be achieved by hardware duplication, for example by using the modules in a voting architecture.

In addition to the transfer of the switch status, the detection and signalling of line faults is indicated by an LED on the top of the module and also provided through a separate relay output in some models. The MTL4611 is functionally identical to the MTL4511 but is not intended for intrinsic safety applications. For functional safety applications the assessment for the MTL4611 is the same as for the MTL4511.

All of the modules are members of the MTL4500 and MTL5500 range of products.

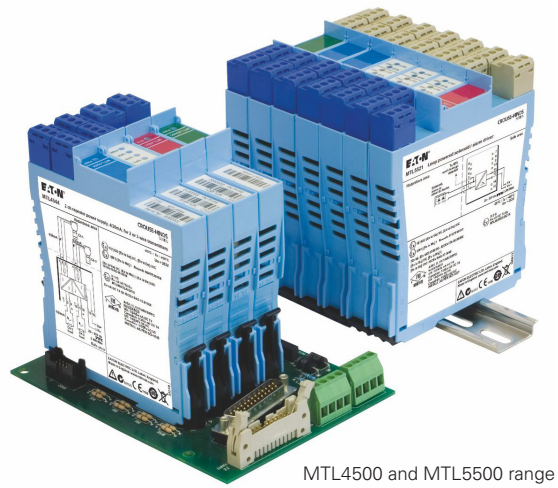

MTL4500 and MTL5500 range

1.2 Variant Description

Functionally the MTL4500 and MTL5500 range of modules are the same but differ in the following way:

- the MTL4500 modules are designed for backplane mounted applications
- the MTL5500 modules are designed for DIN-rail mounting.

In both models the hazardous area field-wiring connections (terminals 1-3, and 4-6) are made through the removable blue connectors, but the safe area and power connections for the MTL**45**xx modules are made through the connector on the base, while the MTL**55**xx uses the removable grey connectors on the top and side of the module.

Note that the safe-area connection terminal numbers differ between the backplane and DIN-rail mounting models.

The binary input models covered by this manual are:

MTL4504	**single channel, switch/proximity detector interface, independent LFD**
MTL4511, MTL4611 and MTL5511	**single channel, switch/proximity detector interface**
MTL4514/B and MTL5514	**single channel, switch/proximity detector interface, independent LFD**
MTL4514N and MTL4514X	**single channel, switch/proximity detector interface, LFD pass-through**
MTL4514D and MTL5514D	**single channel, switch/proximity detector interface, dual output**
MTL4516/C and MTL5516C	**dual channel, switch/proximity detector interface**
MTL4517 and MTL5517	**dual channel, switch/proximity detector interface, independent LFD**

Note: To avoid repetition, further use of MTLx51x in this document can be understood to include both DIN-rail and backplane models. Individual model numbers will be used only where there is a need to distinguish them

1.3 Product build revisions covered by this manual

The information provided in this manual is valid for the product build revisions listed in the following table:

Model Type	Product build revision covered by this manual
MTL4504	Up to and including 11
MTL4511	Up to and including 13
MTL4514	Up to and including 11
MTL4514B	Up to and including 08
MTL4514D	Up to and including 08
MTL4514N	Up to and including 08
MTL4514X	Up to and including 01
MTL4516C	Up to and including 11
MTL4517	Up to and including 11
MTL4611	Up to and including 05
MTL5511	Up to and including 11
MTL5514	Up to and including 11
MTL5514D	Up to and including 08
MTL5516C	Up to and including 11
MTL5517	Up to and including 11

The product build revision is identified by the field 'CC' in the module Product Identification Number that appears at the bottom left-hand corner of the side label:

The CC field immediately precedes the 7-digit Serial Number field, DDDDDDD. Example:

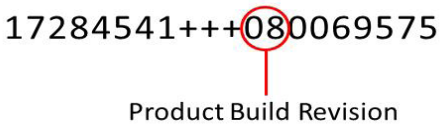

2 System configuration

The modules may be used in single-channel (1oo1) safety functions up to SIL2 without hardware redundancy. The worked example in this manual is for a SIL2 application.

The figure below shows the system configuration and specifies detailed interfaces to the safety related and non-safety-related system components. It does not aim to show all details of the internal module structure, but is intended to support understanding for the application.

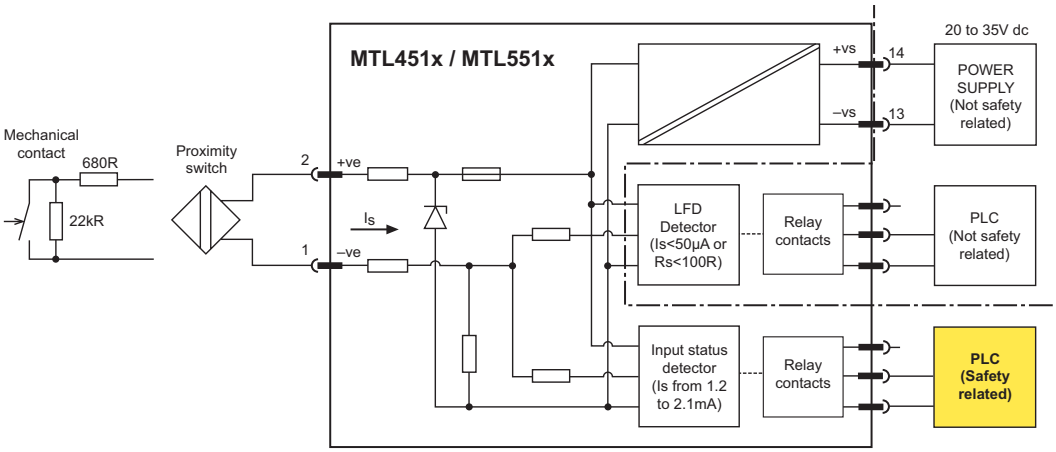

The modules are designed to power a proximity detector or a switch in the hazardous area and to reflect the open or closed condition of the field switch through relay contact output to the safe-area load. The shaded area shows the safety related system connection, while the line fault connections are not safety-related but may be used to assist diagnosis of field circuit conditions. For simplicity the term 'PLC' has been used to denote the safety system performing the monitoring function of the process loop variable.

Note: When using the dual channel module variants both channels must not be used in the same safety function to avoid concerns of common-cause failures. Similarly, only output Ch1 of the MTLx514D may be used in a safety function.

2.1 Associated System Components

There are many parallels between the loop components that must be assessed for intrinsic safety as well as functional safety. In both situations the contribution of each part is considered in relation to the whole.

The module is a component in the signal path between safety-related sensors and safety-related instruments or control systems.

3 Selection of Product and Implications

For safety applications the normally open contact of the relay should be used, with the input such that the relay is in the normally energised state. This gives the operating condition where the safe state is relay de-energised, output contact open.

Consideration should be given to the affect of the wetting current and voltage that are applied to the contacts of the relay. If the modules are used at high voltage or current within the rating of the relay specification it is advisable not to subsequently apply the module for service at low currents or voltages. This is to avoid possible problems due to degradation of the contact surfaces. The rating of the relay contact shall be limited to a maximum of 500mA/35V dc and a minimum of 50mW e.g. 10mA at ≥5V dc in the ON state. In the case of the MTL4514N, the relay current in the ON state is limited to 3mA due to the inclusion of series resistance which allows the logic solver to detect cable faults. However, any increase in contact resistance that may result from the lower relay current is tolerated by the application.

Using an input sensor and logic controller as defined in section 2 and these modules, a system-loop can be implemented that applies functional safety together with intrinsic safety to meet the requirements of protection against explosion hazards.

4 Assessment of Functional Safety

4.1 Hardware Safety Integrity

The hardware assessment shows that these Switch/Proximity Detector Interface modules:

- have a hardware fault tolerance of 0
- are classified as Type A devices ("Non-complex" component with well-defined failure modes)
- have no internal diagnostics

The definitions for product failure of the MTLx51x modules at an ambient temperature of 45°C were determined as follows:-

Failure mode	Failure rate (FIT)						
	MTL4504	MTLx511	MTLx514(B)	MTLx514D	MTL4514N / MTL4514X	MTLx516(C)	MTLx517
Ch1 output stuck ENERGISED	11	11	11	11	10	11	11
Ch1 output stuck DE-ENERGISED	56	184	56	20	43	56	56
Ch1 output state uncertain	0.6	0.6	0.6	0.6	4.6	0.6	0.6
Ch2 output stuck ENERGISED	–	–	–	–	–	11	11
Ch2 output stuck DE-ENERGISED	–	–	–	–	–	58	58
Ch2 output state uncertain	–	–	–	–	–	0.6	0.6
LFD/Aux relay stuck ENERGISED	8	–	8	11	8	–	8
LFD/Aux relay stuck DE-ENERGISED	42	–	41	20	42	–	41
LFD/Aux relay state uncertain	0.3	–	0.3	0.6	1.6	–	0.3
Output & LFD/Aux relay DE-ENERGISED (common failures)	128	–	128	164	118	128	128
Correct operation (failures have no effect)	130	109	130	109	114	145	165

(FITs means failures per 10^9 hours or failures per thousand million hours)

The failure rates apply to the operation of a single channel and apply whether normal phase or reverse phase is selected.

When the relay is in the 'ENERGISED' condition then the NO (normally open) relay contact is closed, and the NC (normally closed) contact is open.

When the relay is in the 'DE-ENERGISED' condition then the NO (normally open) relay contact is open, and the NC (normally closed) contact is closed.

The failure rate for the 'Output and LFD/Aux relay DE-ENERGISED' must be added to the individual de-energised failure rates.

- Reliability data for this analysis is taken from IEC TR 62380:2004 Reliability Data Handbook.
- Failure mode distributions are taken principally from IEC 62061:2005 Safety of Machinery.

It is assumed that the module is powered from a nominal 24V dc supply and operating at a maximum ambient temperature of 45°C.

Example of use of MTLx51x in a safety function

Where the element safety function is to DE-ENERGISE the output on demand, the failure modes shown above can then be defined as:

Failure mode	Category
Ch 1 output stuck ENERGISED	Dangerous undetected, l_{du}
Ch 1 output stuck DE-ENERGISED	Safe undetected, l_{su}
Ch 1 output state uncertain	Dangerous undetected, l_{du}
Ch 2 output stuck ENERGISED	Dangerous undetected, l_{du}
Ch 2 output stuck DE-ENERGISED	Safe undetected, l_{su}
Ch 2 output state uncertain	Dangerous undetected, l_{du}
LFD/Aux relay stuck ENERGISED	No effect, l_{ne}
LFD/Aux relay stuck DE-ENERGISED	No effect, l_{ne}
LFD/Aux relay state uncertain	No effect, l_{ne}
Outut & LFD/Aux relay DE_ENERGISED (common failures)	Safe undetected, l_{su}
Correct operation (failures have no effect)	No effect, l_{ne}

For example, the failure rates for the MTLx511 according to these categories are then (FITs):

Model	l_{sd}	l_{su}	l_{dd}	l_{du}	l_{ne}*
MTLx511	0	184	0	11.6	109

In this example, the safe failure fraction (SFF) is 94%.

*Note that l_{ne} is not used in the calculation of SFF.

Accordingly, the SFF of all module types described in this manual are as follows:

Model	l_{sd}	l_{su}	l_{dd}	l_{du}	l_{ne}*	SFF
MTLx504 Note 1	0	184	0	11.6	50.3	94%
MTLx511	0	184	0	11.6	109	94%
MTLx514(B) Note 1	0	184	0	11.6	50.3	94%
MTLx514D Notes 1,2	0	184	0	11.6	140.6	94%
MTL4514N and MTL4514X Notes 1,2	0	161	0	14.6	165.6	91%
MTLx516(C) Notes 1, 2	0	184	0	11.6	145	94%
MTLx517 Notes 1, 2	0	184	0	11.6	165	94%

Note:

1. *LFD/Aux relay is not used as part of the element safety function*
2. *Only figures for channel 1 are shown*

4.2 Systematic Safety Integrity

The design features and techniques/measures used to avoid systematic faults give the MTLx51x modules a systematic safety integrity measure of SC 3. This has been established using compliance Route 1_S, as described in IEC 61508-2: 2010, section 7.4.2.2 c.

Note: *Earlier versions of this manual (Revisions 1 to 3) inferred a systematic safety integrity for MTLx51x modules of SC 2. Subsequent independent assessment of the design features and techniques/measures used to avoid systematic faults has allowed the modules to be awarded SC 3. No change has been made to the product designs; the SC 3 systematic integrity measure therefore applies retrospectively to MTLx51x modules installed under previous revisions of this manual.*

4.3 SIL capability

Considering both the hardware safety integrity and the systematic capability, this allows the modules to be used in SIL 2 safety functions in a simplex architecture (HFT=0), or in SIL 3 applications with hardware redundancy (HFT=1 or greater). The hardware safety integrity assessment has been conducted according to compliance Route 1_H, as described in IEC 61508-2: 2010, section 7.4.4.

Note: *Independent of hardware architecture and systematic capability considerations, the hardware probability of failure for the entire safety function needs to be calculated for the application to ensure the required PFH (for a high or continuous demand safety function) or PFD_{AVG} (for a low demand safety function) for the SIL is met. The 'SIL Capability' statement assumes that no more than 10% of the probability of dangerous (undetected) failure budget is used by the MTLx51x. The claimed SIL capability is also influenced by the fact that conventional NAMUR proximity sensors complying with EN60947-5-6 are unlikely to be suitable for use in Safety Functions higher than SIL 2, unless used in redundant architectures. For binary input applications requiring SIL 3 capability without hardware redundancy, consider MTL4501-SR and MTL5501-SR, used in conjunction with 'safety' proximity sensors.*

4.4 EMC

The MTL4500 and MTL5500 modules are designed for operation in normal industrial electromagnetic environment but, to support good practice, modules should be mounted without being subjected to undue conducted or radiated interference, see Appendix A for applicable standards and performance criteria. In the specific case of the dual channel modules (MTL X516/C and MTL X517) the inputs must not be allowed to come into contact with conductive surfaces, earthed or otherwise, in order to avoid conducted common mode EMC problems.

4.5 Environmental

The MTL4500 and MTL5500 modules operate over the temperature range from-20°C to +60°C, and at up to 95% non-condensing relative humidity.

The modules are intended to be mounted in a normal industrial environment without excessive vibration, as specified for the MTL4500 & MTL5500 product ranges. See Appendix A for applicable standards and levels.

In applications using MTL4500 range, where the environment has a high humidity, the mounting backplanes should be specified to include conformal coating.

Continued reliable operation will be assured if the exposure to temperature and vibration are within the values given in this specification.

5 Installation

There are two particular aspects of safety that must be considered when installing the MTL4500 or MTL5500 modules and these are:

- **Functional safety**
- **Intrinsic safety**

Reference must be made to the relevant sections within the instruction manual for MTL4500 range (INM4500) or MTL5500 range (INM5500) which contain basic guides for the installation of the interface equipment to meet the requirements of intrinsic safety. In many countries there are specific codes of practice, together with industry guidelines, which must also be adhered to.

For functional safety applications the equipment should not be subjected to shock impacts of greater than 5g to ensure that the mechanical relay contacts are not affected.

Provided that these installation requirements are followed then there are no additional factors to meet the needs of applying the products for functional safety use.

To guard against the effects of dust and water the modules should be mounted in an enclosure providing at least IP54 protection degree, or the location of mounting should provide equivalent protection such as inside an equipment cabinet.

6 Maintenance

To follow the guidelines pertaining to operation and maintenance of intrinsically safe equipment in a hazardous area, yearly periodic audits of the installation are required by the various codes of practice.

In addition, proof-testing of the loop operation to conform with functional safety requirements should be carried out at the intervals determined by the SIF assessment for the specific application, but it is recommended that this be carried out at least once every three years.

Refer to Appendix B for the proof testing procedure of the MTL4500 or MTL5500 modules.

Note that there may also be specific requirements laid down in the E/E/PE operational maintenance procedure for the complete installation.

If an MTL4500 or MTL5500 module is found to be faulty during commissioning or during the normal lifetime of the product then such failures should be reported to the MTL office. When appropriate, a Customer Incident Report (CIR) will be notified to enable the return of the unit to the factory for analysis. If the unit is within the warranty period then a replacement unit will be sent.

Consideration should be made of the normal lifetime for a device of this type which would be in the region of ten years.

Note also that the maximum number of switching cycles under the load conditions given in section 3 is 22 x 10^4 at 500mA dc, rising to 9 x 10^6 at 10mA dc.

7 Appendices

7.1 Appendix A: Summary of applicable standards

This annex lists all standards referred to in the previous sections of this document:

IEC 61508:2010	Functional safety of electrical/electronic/programmable electronic safety-related systems. Parts 1 and 2 as relevant
EN 60947-5-6:2001	Control circuit devices and switching elements – DC interface for proximity sensors and switching amplifiers (NAMUR)
EN 61131-2:2007	Programmable controllers – Part 2: Equipment requirement and tests (EMC requirements)
EN 61326-1:2012	Electrical equipment for measurement, control and laboratory use – EMC requirements. (Criterion A)
BS EN 61326-3-1:2017	Electrical equipment for measurement, control and laboratory use – EMC requirements – Part 3-1: Immunity requirements for safety related systems and for equipment intended to perform safety related functions (functional safety) – General industrial applications. (Criterion FS)
NE21 : 2007	Electromagnetic Compatibility of Industrial Process and Laboratory Control Equipment. (Criterion A)
Lloyds Register Type Approval System : 2002, Test Specification Number 1.	Specifically vibration: 1.0mm displacement @ 5 to 13.2Hz and 0.7G acceleration @13.2Hz to 100Hz per IEC60068-2-6, test Fc
EN 60068-2-27: 2009	Environmental testing. Test Ea and guidance. Shock. (Criterion FS)

7.2 Appendix B : Proof Test Procedure, MTL45/5500 Binary Input Modules

MTLx51x Proof Test Procedure

Test sequence:

1. System –Normal operation test
2. Input / Output characteristic functional safety test.
3. System- Normal operation test

1. System - Normal operation test

Make sure that the module to be tested is operating normally in the target system, without errors and in energised mode. If the module is connected in a faulty or de-energised loop, restore normal, fault free and energised conditions before testing.

2. Input/Output characteristic functional safety test

Observe normal anti-static precautions when handling equipment during device testing.

Remove the unit from the target system and connect the appropriate input test circuit and dc power supply. Please note, that it is acceptable to leave the unit in the target system, provided it has been secured, and that the I/O terminals are disconnected from the system and available for test. Alternatively, for the backplane mounted MTL45xx modules, use a separate backplane for this purpose to facilitate access to the power and output connections.

Configuration Switch Settings

The configuration switches on the edge of the module define the phase of the input/output relationship and the use of the line fault detection for each channel.

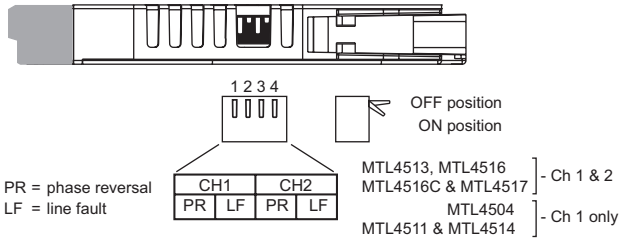

Record the settings of these switches for the module under test so that the condition can be restored following completion of the tests.

Input Conditions

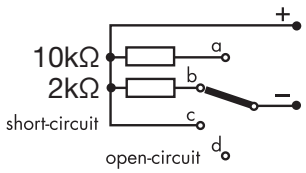

Switch – simulation conditions
a) **Normal**- field switch open
b) **Normal** - field switch closed
c) **Line Fault**- Test for short circuit
d) **Line Fault**- Test for open circuit

The switch arrangement shown enables the four basic conditions of the field loop to be simulated and the operation of the isolator module to be checked.

Connect the power supply Vs (nominal 24.0V, min/max. range 20.0 to 35.0V) to terminals 13 and 14 (+ve to terminal 14).

Connect the '+' & '–' switch terminals to the input terminals and turn on the dc power to the module.

Output Results

Operate the switch through the various positions and confirm expected operation of the module. It is recommended that the results are recorded in a table such as that shown below.

Example table with LFD on

Input switch position	Channel contacts		Expected 'Status' LED condition	Actual 'Status' condition	LFD contacts *		Expected 'LFD' LED condition	Actual 'LFD' condition
	NC	NO			NC	NO		
a	Closed	Open	OFF		Closed	Open	OFF	
b	Open	Closed	ON		Closed	Open	OFF	
c	Closed	Open	OFF		Open	Closed	ON	
d	Closed	Open	OFF		Open	Closed	ON	

* If provided on the module. Conditions shown are for MTLx514 and MTLx517 variants. For MTL4504 the LFD contact states are reversed.

Note that the phase reversal switch on the module will reverse the channel output conditions, but not the LFD output. If appropriate, repeat these measurements for channel 2.

3. System - Normal operation test

Disconnect the test setup from the unit and connect the original system configuration. Make sure, as before, that the tested unit is operating normally in the target system, without errors and in energised mode.

AUSTRALIA
MTL Instruments Pty Ltd,
10 Kent Road, Mascot, New South Wales, 2020, Australia

Tel: +61 1300 308 374 Fax: +61 1300 308 463
E-mail: mtlsalesanz@eaton.com

BeNeLux
MTL Instruments BV
Ambacht 6, 5301 KW Zaltbommel
The Netherlands

Tel: +31 (0) 418 570290 Fax: +31 (0) 418 541044
E-mail: mtl.benelux@eaton.com

CHINA
Cooper Electric (Shanghai) Co. Ltd
955 Shengli Road, Heqing Industrial Park
Pudong New Area, Shanghai 201201

Tel: +86 21 2899 3817 Fax: +86 21 2899 3992
E-mail: mtl-cn@eaton.com

FRANCE
MTL Instruments sarl,
7 rue des Rosiéristes, 69410 Champagne au Mont d'Or
France

Tel: +33 (0)4 37 46 16 53 Fax: +33 (0)4 37 46 17 20
E-mail: mtlfrance@eaton.com

GERMANY
MTL Instruments GmbH,
Heinrich-Hertz-Str. 12, 50170 Kerpen, Germany

Tel: +49 (0)22 73 98 12- 0 Fax: +49 (0)22 73 98 12- 2 00
E-mail: csckerpen@eaton.com

INDIA
MTL India,
No.36, Nehru Street, Off Old Mahabalipuram Road
Sholinganallur, Chennai- 600 119, India

Tel: +91 (0) 44 24501660 /24501857 Fax: +91 (0) 44 24501463
E-mail: mtlindiasales@eaton.com

ITALY
MTL Italia srl,
Via San Bovio, 3, 20090 Segrate, Milano, Italy

Tel: +39 02 959501 Fax: +39 02 95950759
E-mail: chmninfo@eaton.com

JAPAN
Cooper Crouse-Hinds Japan KK,
MT Building 3F, 2-7-5 Shiba Daimon, Minato-ku,
Tokyo, Japan 105-0012

Tel: +81 (0)3 6430 3128 Fax: +81 (0)3 6430 3129
E-mail: mtl-jp@eaton.com

NORWAY
Norex AS
Fekjan 7c, Postboks 147,
N-1378 Nesbru, Norway

Tel: +47 66 77 43 80 Fax: +47 66 84 55 33
E-mail: info@norex.no

RUSSIA
Cooper Industries Russia LLC
Elektrozavodskaya Str 33
Building 4
Moscow 107076, Russia

Tel: +7 (495) 981 3770 Fax: +7 (495) 981 3771
E-mail: mtlrussia@eaton.com

SINGAPORE
Cooper Crouse-Hinds Pte Ltd
No 2 Serangoon North Avenue 5, #06-01 Fu Yu Building
Singapore 554911

Tel: +65 6645 9864 / 6645 9865 Fax: +65 6 645 9865
E-mail: sales.mtlsing@eaton.com

SOUTH KOREA
Cooper Crouse-Hinds Korea
7F. Parkland Building 237-11 Nonhyun-dong Gangnam-gu,
Seoul 135-546, South Korea.

Tel: +82 6380 4805 Fax: +82 6380 4839
E-mail: mtl-korea@eaton.com

UNITED ARAB EMIRATES
Cooper Industries/Eaton Corporation
Office 205/206, 2nd Floor SJ Towers, off. Old Airport Road,
Abu Dhabi, United Arab Emirates

Tel: +971 2 44 66 840 Fax: +971 2 44 66 841
E-mail: mtlgulf@eaton.com

UNITED KINGDOM
Eaton Electric Limited,
Great Marlings, Butterfield, Luton
Beds LU2 8DL

Tel: +44 (0)1582 723633 Fax: +44 (0)1582 422283
E-mail: mtlenquiry@eaton.com

AMERICAS
Cooper Crouse-Hinds MTL Inc.
3413 N. Sam Houston Parkway W.
Suite 200, Houston TX 77086, USA

Tel: +1 281-571-8065 Fax: +1 281-571-8069
E-mail: mtl-us-info@eaton.com

Powering Business Worldwide

Eaton Electric Limited,
Great Marlings, Butterfield, Luton
Beds, LU2 8DL, UK.
Tel: + 44 (0)1582 723633 Fax: + 44 (0)1582 422283
E-mail: mtlenquiry@eaton.com
www.eaton.com

© 2024 Eaton
All Rights Reserved
Publication No. SM45-55 BI Rev 9 091224
December 2024

EUROPE (EMEA):
+44 (0)1582 723633
mtlenquiry@eaton.com

THE AMERICAS:
+1 800 835 7075
mtl-us-info@eaton.com

ASIA-PACIFIC:
+65 6645 9864 / 9865
sales.mtlsing@eaton.com

The given data is only intended as a product description and should not be regarded as a legal warranty of properties or guarantee. In the interest of further technical developments, we reserve the right to make design changes.