Safety Manual
Intrinsic Safety Solutions

July 2024
SMx 531-82 Rev 6

CROUSE-HINDS SERIES

MTL4500/MTL5500 range

Machine Monitor Interfaces

SIL 1 IEC 61508:2010 * MTLx582B

SIL 2 IEC 61508:2010 * MTLx531

Vibration Probes - MTL4531, MTL5531
Temperature Sensors - MTL 4582B, MTL5582B

FSM FUNCTIONAL SAFETY MANAGEMENT IEC 61508:2010

FUNCTIONAL SAFETY MANAGEMENT

These products are for use as sub-systems within a Safety System conforming to the requirements of IEC61508:2010 and enable a Safety Integrity Level of SIL1 to be achieved for the instrument loop.

Eaton Electric Ltd, Luton is a certified Functional Safety Management company meeting the requirements of IEC61508 Part1:clause 6

* Refer to content of this manual for details

EATON
Powering Business Worldwide

Machine Monitor Interfaces

Contents

1 Introduction 3
- 1.1 Application and function 3
- 1.2 Variant description 3
- 1.3 Product build revisions covered by this manual 4

2 System configuration 5
- 2.1 Associated system components 6

3 Selection of product and implications 7

4 Assessment of functional safety 7
- 4.1 Hardware safety integrity 7
- 4.1.1 MTLx531 Assessment 7
- 4.1.2 MTLx582 Assessment 8
- 4.2 Systematic Safety Integrity 9
- 4.3 SIL capability 9
- 4.4 EMC 9
- 4.5 Environmental 9

5 Installation 10

6 Maintenance 10

7 Appendices 11
- 7.1 Appendix A: Summary of applicable standards 11
- 7.2 Appendix B: Proof Test Procedure, MTL45/5500 Vibration Probe Interfaces 11

This manual supports the application of the products in functional safety related loops. It must be used in conjunction with other supporting documents to achieve correct installation, commissioning and operation.

In the interest of further technical developments, MTL reserve the right to make design changes.

	Hardware Fault Tolerance (HFT)†
Module type	**0, 1 or 2**
MTL4531 **MTL5531**	SIL 2
MTL4582B **MTL5582B**	SIL 1 *

† These modules have an inherent fault tolerance of 0.

** The maximum SIL attainment is limited by The Systemic Capability, and is independent of Hardware Fault Tolerance. Refer to section 4.*

1 Introduction

1.1 Application and function

The MTL4531 and MTL5531 are single channel isolator modules which enable vibration sensors and probes located in a hazardous area to be connected to monitoring systems in the safe area. These modules are designed and assessed according to IEC 61508 for use in Safety instrument systems up to SIL2. For resistance temperature detectors, RTDs, the MTL4582B and MTL5582B module is a single channel isolator module that repeats the resistance value from hazardous to safe area. The modules are designed and assessed according to IEC 61508 for use in safety instrumented systems up to SIL1.

The vibration modules are compatible with three-wire eddy-current probes and accelerometers or two-wire current sensors. The RTD isolator is compatible with two, three or four-wire devices. There are configuration switches on the modules that define the type and arrangement of the connected sensors.

These modules are members of the MTL4500 and MTL5500 Series of products.

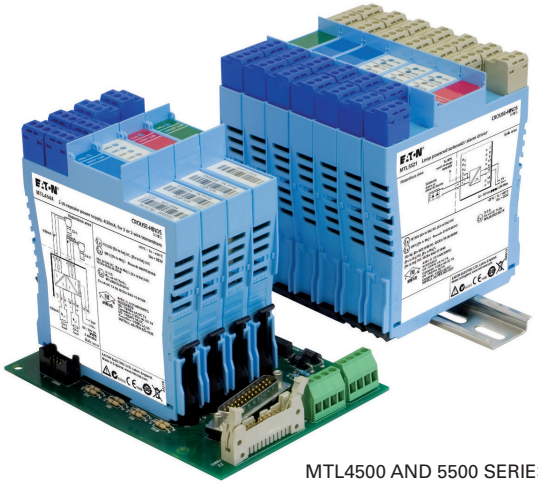

MTL4500 AND 5500 SERIES

1.2 Variant Description

Functionally the MTL4500 and MTL5500 modules are the same but differ in the following way:

- the MTL4500 modules are designed for backplane mounted applications
- the MTL5500 modules are designed for DIN rail mounting.

In both models the hazardous area field-wiring connections (terminals 1-3, and 4-6) are made through the removable blue connectors on the top of the modules, but the safe area and power connections for the MTL4531 modules are made through the connector on the base, while the MTL5531/MTL5582 uses the removable grey connectors on the top and side of the module.

Note that the safe-area connection terminal numbers differ between the backplane and DIN-rail mounting models.

The specific models covered by this manual are:

MTL4531 and MTL5531 vibration transducer interface

MTL4582 and MTL5582B resistance isolators

Note: *To avoid repetition, further use of MTLx531 in this document can be understood to include both DIN-rail and backplane models. Individual model numbers will be used only where there is a need to distinguish them.*

1.3 Product build revisions covered by this manual

The information provided in this manual is valid for the product build revisions listed in the following table:

Model Type	Product build revision covered by this manual
MTL4531	Up to and including 13
MTL5531	Up to and including 12
MTL4582B	Up to and including 08
MTL5582B	Up to and including 08

The product build revision is identified by the field 'CC' in the module Product Identification Number that appears at the bottom left-hand corner of the side label:

The CC field immediately precedes the 7-digit Serial Number field, DDDDDDD. Example:

2 System configuration

An MTLx531 or MTLx582B module may be used in a single-channel (1oo1) safety instrumented function up to SIL1 where the safe state is the output de-energised. The worked example in this manual is for SIL1 application.

The figures below show the system configuration and specifies the interfaces to the safety related and non safety-related system components. It does not aim to show all details of the internal module structure, but is intended to support understanding for the application.

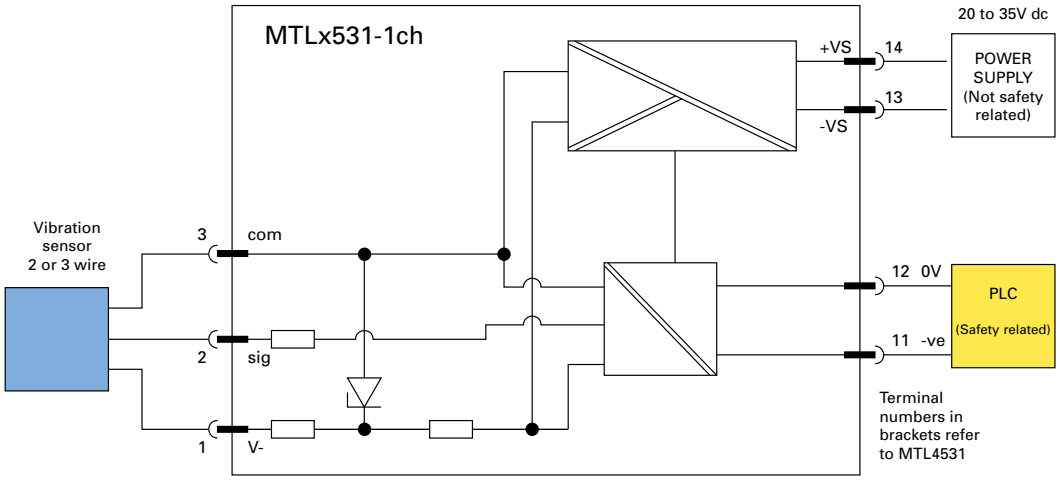

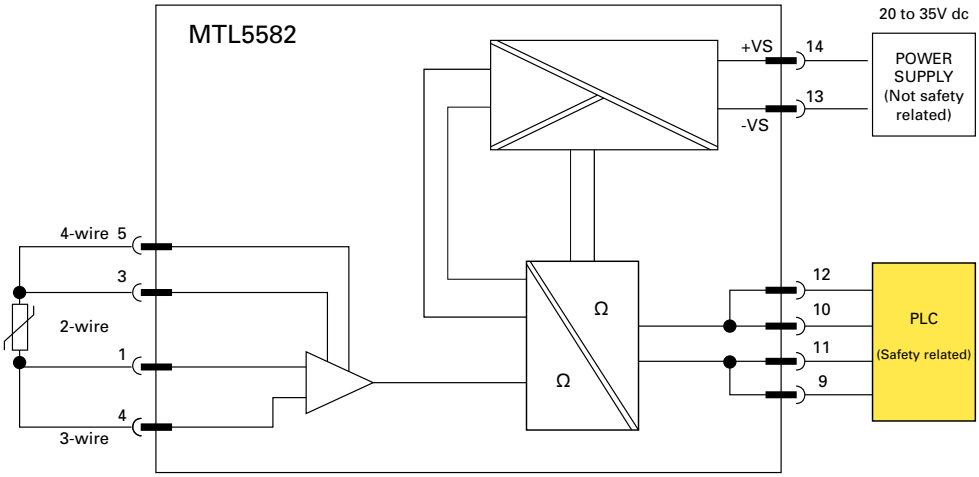

The MTLx531 modules are designed to power a vibration sensor in the hazardous area and repeat the measurement signal as a voltage output to a monitoring system in the safe area. Three-wire or two-wire sensors can be connected to the modules and the configuration switches accessible on the edge of the module set to the required state. When used with a two-wire current sensor, field terminals 1 and 2 must be linked together .

The MTLx582B connects to a 2-, 3-, or 4-wire resistance temperature device (RTD) or other resistance sensor located in a hazardous area, isolates it and repeats the resistance to a monitoring system in the safe area. The module is intended typically (but not exclusively) for use with Pt100 3- wire RTDs, and operates over the range of 10 ohms to 400 ohms. Switches located on edge of the module allow selection of 2-, 3-, or 4-wire RTD connection. The number of wires which can be connected on the safe-area side of the unit is independent of the number of wires which can be connected on the hazardous-area side. The module drives upscale in the case of open-circuit detection.

The yellow (hatched) area in the diagrams shows the safety-relevant system connection when using these products in safety-related applications.

2.1 Associated System Components

There are many parallels between the loop components that must be assessed for intrinsic safety as well as functional safety, where in both situations the contribution of each part is considered in relation to the whole.

The MTLx531 module is a component in the signal path between safety-related sensors and safety related monitoring systems.

The sensor and any associated amplifier must be suitable for the process and have been assessed and verified for use in functional safety applications, as well as its certification for hazardous area mounting.

Similarly, the RTD sensors connected to the MTLx582B module must be selected for their suitability for the process and their use in a functional safety application, even though they are regarded as 'simple apparatus' with regard to intrinsic safety.

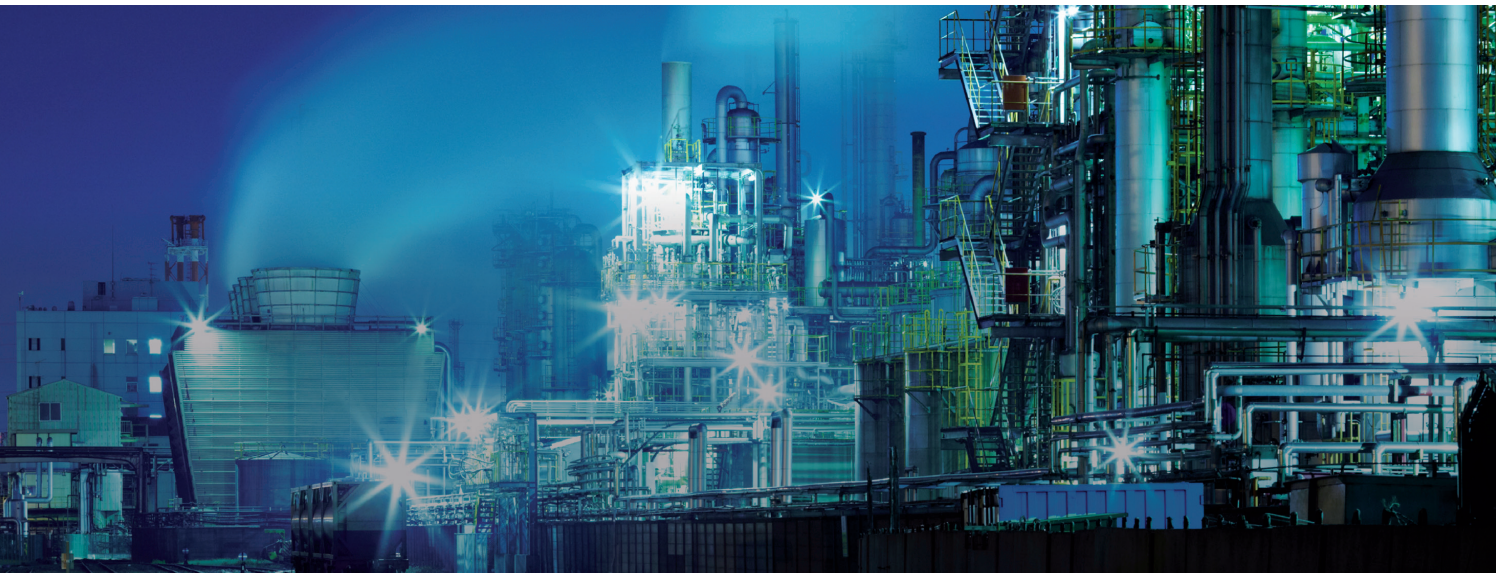

3 Selection of product and implications

For the MTLx531 modules there is only one function: to repeat the signal voltage and frequency from a vibration sensor, powered through the module, into the input channel of a vibration monitoring system.

This may be used within a safety function, with power off as the safe state. The input modules of the vibration monitoring system must be able to diagnose when the signal voltage is outside of the expected measuring range and take appropriate action to declare the signal as 'bad'.

This is considering the hardware failure rate only and the user must consider the systematic implications of applying this equipment in safety functions where a number of safety-related subsystem channels are implemented to achieve the requisite hardware fault tolerance.

The MTLx582B transfers the value of resistance from its measuring circuit to the output terminals within a given tolerance. Here also, the requirement for the receiving system is that it must diagnose when the resistance measured at the module output terminals is outside of the expected range and take appropriate action.

When using these modules within a safety instrumented function it is, of course, a requirement that the sensors have been assessed and verified for such an application and the failure rate data is available for use in the relevant safety calculations.

4 Assessment of functional safety

The design features and the techniques/measures used to prevent systematic faults are suitable for the use in modules in safety functions up to SIL1 (MTLx582B) or SIL2 (MTLx531).

It is assumed that the module is powered from a nominal 24Vdc supply. The product has been assumed to operate at a maximum ambient temperature of 45°C under normal conditions

4.1 Hardware safety integrity

4.1.1 MTLx531 Assessment

The hardware assessment shows that MTLx531 vibration interfaces:

- have a hardware fault tolerance of 0
- are classified as Type A devices ("Non-complex" component with well-defined failure modes)
- there are no internal diagnostic elements of these products.

The definitions for product failure of the modules at an ambient temperature of 45°C were determined as follows:-

Failure mode	MTLx531 Failure rate (FIT)
Output voltage high out of range (>-0.5V)	309
Output voltage low out of range (<-18V)	58
Output voltage within range but >2% in error	294
Output voltage correct within ±2%	78

- FITs means failures per 10^9 hours or failures per thousand million hours.
- Reliability data for this analysis is taken from IEC TR 62380:2004 Reliability Data Handbook.
- Failure mode distributions are taken principally from IEC 62061:2005 Safety of Machinery.

Example of use in a safety function

In this example for a module the application context is assumed to be:

- the safety function is to repeat voltage within ±2% over a voltage range of-0.5V to-18V and a frequency range of DC to 15kHz.
- the monitoring system will diagnose voltages outside the range of-0.5V to-18V as faults and take appropriate action

The failure modes shown above can then be defined as :

Failure mode	Category
Output voltage high out of range (>-0.5V)	Dangerous detected, λ_{dd}
Output voltage low out of range (<-18V)	Dangerous detected, λ_{dd}
Output voltage within range but >2% in error	Dangerous undetected, λ_{du}
Output voltage correct within ±2%	Safe undetected, λ_{su}

The failure rates for these categories are then (FITs)

Model	λ_{sd}	λ_{su}	λ_{dd}	λ_{du}
MTL4531 or MTL5531	0	78	367	294

In this example, the safe failure fraction is 60%.

4.1.2 MTLx582 Assessment

The hardware assessment shows that MTLx582B resitance isolators:

- have a hardware fault tolerance of 0
- are classified as Type A devices ("Non-complex" component with well-defined failure modes)
- there are no internal diagnostic elements of these products.

The definitions for product failure of the modules at an ambient temperature of 45°C were determined as follows:-

Failure mode	MTLx582B Failure rate (FIT)
Output resistance >400 ohms (upscale)	274
Output resistance <10 ohms (downscale)	50
Output resistance correct within 1% FSR*	89
Output resistance within range but >1% FSR, or stuck or uncertain	107

*FSR means 'Full Scale Range'

Example of use in a safety function

In this example for a module the application context is assumed to be:

- the isolator safety function is to repeat resistance within ±4ohms.
- the monitoring system will diagnose resistances above 400ohms and below 10ohms as faults and take appropriate action

The failure modes shown above can then be defined as :

Failure mode	MTLx582 Failure rate (FIT)
Output resistance >400 ohms (upscale)	Dangerous detected, λ_{dd}
Output resistance <10 ohms (downscale)	Dangerous detected, λ_{dd}
Output resistance correct within > 1% FSR	Dangerous undetected, λ_{du}
Output resistance correct within 1% FSR	Safe undetected, λ_{su}
Output resistance stuck, or uncertain	Dangerous undetected, λ_{du}

The failure rates for these categories are then (FITs)

Model	λ_{sd}	λ_{su}	λ_{dd}	λ_{du}
MTLx582B	0	89	324	107

In this example, the safe failure fraction is 78%.

4.2 Systematic Safety Integrity

4.2.1 MTLx531 modules

The design features and the techniques/measures used to prevent systematic faults give the MTLx531 a systematic safety integrity measure of SC 2.

Note: Revision 3 this manual inferred a systematic safety integrity for MTLx531 modules of SC 1. Subsequent re-assessment of the design features and techniques/measures used to avoid systematic faults has allowed the modules to be awarded SC 2. No change has been made to the product designs; the SC 2 systematic integrity measure therefore applies retrospectively to MTLx531 modules installed under previous revisions of this manual.

4.2.2 MTLx582B modules

The design features and the techniques/measures used to prevent systematic faults give the MTLx582B modules a systematic safety integrity measure of SC1.

4.3 SIL capability

4.3.1 MTLx531 modules

Considering both the hardware safety integrity and the systematic capability, this allows MTLx531 modules to be used in SIL 2 safety functions in a simplex architecture (HFT = 0).

4.3.2 MTLx582B modules

Considering both the hardware safety integrity and the systematic capability, this allows MTLx582B modules to be used in SIL 1 safety functions in a simplex architecture (HFT = 0). Note that the SIL capability is limited by the systematic capability and is independent of the hardware fault tolerance

4.4 EMC

The MTL4500 and MTL5500 modules are designed for operation in normal industrial electromagnetic environment but, to support good practice, modules should be mounted without being subjected to undue conducted or radiated interference, see Appendix A for applicable standards and levels.

It is important that the effect of electromagnetic interference on the operation of any safety function is reduced where possible. For this reason it is recommended that the cable connections from the logic solver to the isolator modules be a maximum of 30 metres and are not exposed to possible induced surges, keeping them inside a protected environment.

Any maintenance or other testing activity should only be conducted when the field loop is not in service, to avoid any possibility of introducing a transient change in the field signal.

4.5 Environmental

The MTL4500 and MTL5500 modules operate over the temperature range from-20°C to +60°C, and at up to 95% non-condensing relative humidity.

The modules are intended to be mounted in a normal industrial environment without excessive vibration, as specified for the MTL4500 & MTL5500 product ranges. See Appendix A for applicable standards and levels.

Continued reliable operation will be assured if the exposure to temperature and vibration are within the values given in the specification.

5 Installation

There are two particular aspects of safety that must be considered when installing the MTL4500 or MTL5500 modules and these are:

- Functional safety
- Intrinsic safety

Reference must be made to the relevant sections within the instruction manual for MTL4500 Series (INM4500) or MTL5500 Series (INM5500) which contain basic guides for the installation of the interface equipment to meet the requirements of intrinsic safety. In many countries there are specific codes of practice, together with industry guidelines, which must also be adhered to.

Provided that these installation requirements are followed then there are no additional factors to meet the needs of applying the products for functional safety use.

To guard against the effects of dust and water the modules should be mounted in an enclosure providing at least IP54 protection degree, or the location of mounting should provide equivalent protection such as inside an equipment cabinet.

In applications using MTL4500 Series, where the environment has a high humidity, the mounting backplanes should be specified to include conformal coating.

6 Maintenance

To follow the guidelines pertaining to operation and maintenance of intrinsically safe equipment in a hazardous area, yearly periodic audits of the installation are required by the various codes of practice.

In addition, proof-testing of the loop operation to conform with functional safety requirements should be carried out at the intervals determined by safety case assessment.

Proof testing must be carried out according to the application requirements, but it is recommended that this be carried out at least once every three years.

Refer to Appendix B for the proof testing procedure of the MTLx531 or MTLx582B modules.

Note that there may also be specific requirements laid down in the E/E/PE operational maintenance procedure for the complete installation.

If an MTL4500 or MTL5500 module is found to be faulty during commissioning or during the normal lifetime of the product then such failures should be reported to MTL. When appropriate, a Customer Incident Report (CIR) will be notified to enable the return of the unit to the factory for analysis. If the unit is within the warranty period then a replacement unit will be sent.

Consideration should be made of the normal lifetime for a device of this type which would be in the region of ten years.

7 Appendices

7.1 Appendix A: Summary of applicable standards and recommendations

The MTL4531 and MTL5531 are single channel isolator modules which enable vibration sensors and probes located in a hazardous area to be connected to monitoring systems in the safe area. For resistance temperature detectors, RTDs, the MTL5582 module is a single channel isolator module that repeats the resistance value from hazardous to safe area. The modules are also designed and assessed according to IEC 61508 for use in safety instrumented systems up to SIL1.

IEC 61508:2010	Functional safety of electrical/electronic/programmable electronic safety-related systems. Part 2 and 2 as relevant
EN 61131-2:2003	Programmable controllers- Part 2: Equipment requirements and tests (EMC requirements)
EN 61326-1:2006	Electrical equipment for measurement, control and laboratory use- EMC requirements. (Criterion A)
IEC 61326-3-1:2008	Electrical equipment for measurement, control and laboratory use- EMC requirements- Part 3-1: Immunity requirements for equipment performing or inteded to perform safety related functions (functional safety)- General industrial applications. (Criterion FS)
NE21:2007	Electromagnetic Compatibility of Industrial Process and Laboratory Control Equipment. (Criterion A)
Lloyds Register Type Approval System:2002 Test Specification Number 1.	Specifically vibration: 1.0mm displacement @ 5 to 13.2Hz and 0.7G acceleration @ 13.2Hz to 100Hz per IEC60068-2-6. test Fc
EN 60068-2-27	Environmental testing. Test Ea and guidance. Shock. (Criteion FS)

7.2 Appendix B: Proof Test Procedures

7.2.1 MTLx531 Proof Test Procedure

For MTL5531, remove the module from the target system and make the safe and hazardous area connections as shown below:

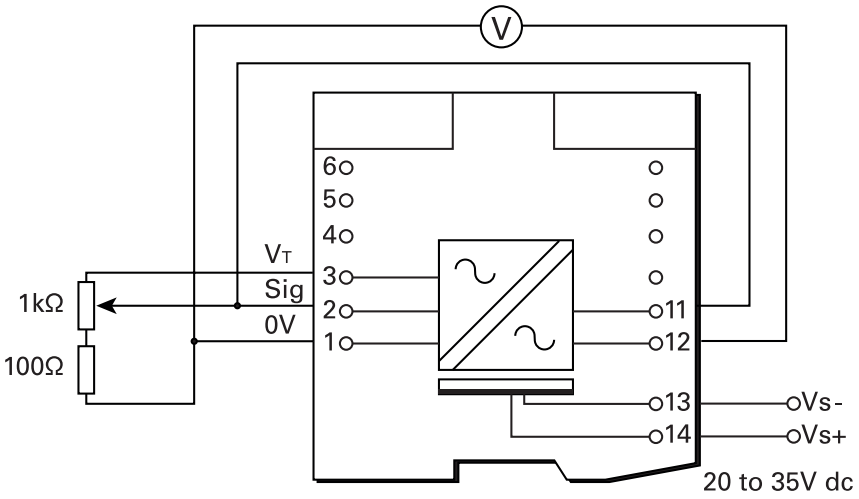

Test circuit for MTL5531

Measure the voltage on terminal 3 with respect to terminal 1; this should be >19V. Vary the potentiometer setting and check that the reading on voltmeter V varies by no more than ±100mV.

Note *that the safe-area terminal numbers of MTL4531 differ from those of MTL5531: refer to the appropriate product data sheet. If an MTL4531 is to be tested in situ (ie installed on a backplane in the target system), it is imperative that the safe area terminals are disconnected from the input to the logic solver before the test is conducted. Alternatively, the module may be removed from the target system and bench-tested on a separate backplane.*

7.2.2 MTLx582B Proof Test Procedure

Due to the nature of the MTLx582B, testing of the module in isolation can be complex. If bench-testing facilities are unavailable, and the safety system is out of service (for example during a plant shut-down), the module may be tested in combination with the logic solver. In this case, a simple test procedure would be to disconnect the RTD sensor cables from the hazardous-area input terminals of the module and connect a precision resistor directly across the module terminals (linking the 3- and 4-wire compensating terminals if necessary in accordance with the module configuration). Using published charts for the appropriate RTD sensor type, check that the logic solver reads a temperature within an accuracy of ±4 ohms of the resistor value. Some additional allowance for the inaccuracy of the logic solver may need to be made. The test should be conducted at two different resistances within the range of the RTD sensor, for example by using values of 100 ohms and 250 ohms.

If it is not possible to test the module in situ, it may be bench tested as above, using a 1mA current source to pass current through the safe-area + and – terminals.

THIS PAGE IS LEFT INTENTIONALLY BLANK

CROUSE-HINDS
SERIES

AUSTRALIA
MTL Instruments Pty Ltd,
10 Kent Road, Mascot, New South Wales, 2020, Australia

Tel: +61 1300 308 374 Fax: +61 1300 308 463
E-mail: mtlsalesanz@eaton.com

BeNeLux
MTL Instruments BV
Ambacht 6, 5301 KW Zaltbommel
The Netherlands

Tel: +31 (0) 418 570290 Fax: +31 (0) 418 541044
E-mail: mtl.benelux@eaton.com

CHINA
Cooper Electric (Shanghai) Co. Ltd
955 Shengli Road, Heqing Industrial Park
Pudong New Area, Shanghai 201201

Tel: +86 21 2899 3817 Fax: +86 21 2899 3992
E-mail: mtl-cn@eaton.com

FRANCE
MTL Instruments sarl,
7 rue des Rosiéristes, 69410 Champagne au Mont d'Or
France

Tel: +33 (0)4 37 46 16 53 Fax: +33 (0)4 37 46 17 20
E-mail: mtlfrance@eaton.com

GERMANY
MTL Instruments GmbH,
Heinrich-Hertz-Str. 12, 50170 Kerpen, Germany

Tel: +49 (0)22 73 98 12- 0 Fax: +49 (0)22 73 98 12- 2 00
E-mail: csckerpen@eaton.com

INDIA
MTL India,
No.36, Nehru Street, Off Old Mahabalipuram Road
Sholinganallur, Chennai- 600 119, India

Tel: +91 (0) 44 24501660 /24501857 Fax: +91 (0) 44 24501463

E-mail: mtlindiasales@eaton.com

ITALY
MTL Italia srl,
Via San Bovio, 3, 20090 Segrate, Milano, Italy

Tel: +39 02 959501 Fax: +39 02 95950759
E-mail: chmninfo@eaton.com

JAPAN
Cooper Industries Japan K.K.
Unizo Nogizaka Bldg. 7th Floor, 8-11-37, Akasaka, Minato-ku,
Tokyo, Japan 107-0052

Tel: +81 (0)3 6434 7890 Fax:+81 (0)3 6434 7889
E-mail: mtl-jp@eaton.com

NORWAY
Norex AS
Fekjan 7c, Postboks 147,
N-1378 Nesbru, Norway

Tel: +47 66 77 43 80 Fax: +47 66 84 55 33
E-mail: info@norex.no

RUSSIA
Cooper Industries Russia LLC
Elektrozavodskaya Str 33
Building 4
Moscow 107076, Russia

Tel: +7 (495) 981 3770 Fax: +7 (495) 981 3771
E-mail: mtlrussia@eaton.com

SINGAPORE
Cooper Crouse-Hinds Pte Ltd
100G Pasir Panjang Road, Interlocal Centre
#07-08 Singapore 118523

Tel: +65 6645 9888 Fax: +65 6645 9811
E-mail: sales.mtlsing@eaton.com

SOUTH KOREA
Cooper Crouse-Hinds Korea
7F. Parkland Building 237-11 Nonhyun-dong Gangnam-gu,
Seoul 135-546, South Korea.

Tel: +82 6380 4805 Fax: +82 6380 4839
E-mail: mtl-korea@eaton.com

UNITED ARAB EMIRATES
Cooper Industries/Eaton Corporation
Office 205/206, 2nd Floor SJ Towers, off. Old Airport Road,
Abu Dhabi, United Arab Emirates

Tel: +971 2 44 66 840 Fax: +971 2 44 66 841
E-mail: mtlgulf@eaton.com

UNITED KINGDOM
Eaton Electric Limited,
Great Marlings, Butterfield, Luton
Beds LU2 8DL

Tel: +44 (0)1582 723633 Fax: +44 (0)1582 422283
E-mail: mtlenquiry@eaton.com

AMERICAS
Cooper Crouse-Hinds MTL Inc.
3413 N. Sam Houston Parkway W.
Suite 200, Houston TX 77086, USA

Tel: +1 800-835-7075 Fax: +1 866-298-2468
E-mail: mtl-us-info@eaton.com

Powering Business Worldwide

Eaton Electric Limited,
Great Marlings, Butterfield, Luton
Beds, LU2 8DL, UK.
Tel: + 44 (0)1582 723633 Fax: + 44 (0)1582 422283
E-mail: mtlenquiry@eaton.com
www.eaton.com

© 2024 Eaton
All Rights Reserved

Publication No. SMx 531-82 Rev 6 220724
July 2024

EUROPE (EMEA):
+44 (0)1582 723633
mtlenquiry@eaton.com

THE AMERICAS:
+1 800 835 7075
mtl-us-info@eaton.com

ASIA-PACIFIC:
+65 6645 9888
sales.mtlsing@eaton.com

The given data is only intended as a product description and should not be regarded as a legal warranty of properties or guarantee. In the interest of further technical developments, we reserve the right to make design changes.