Safety manual
MTL functional safety management

April 2024
SM45-5501-SR rev 3

MTL4500/MTL5500 range

Safety Switch Input Modules

MTL4501-SR, MTL5501-SR

FUNCTIONAL SAFETY MANAGEMENT

Eaton Electric Ltd, Luton is a certified Functional Safety Management company meeting the requirements of IEC61508: 2010 Part 1, Clause 6.
This product is for use as a sub-system within a Safety System conforming to the requirements of IEC 61508:2010 and enable a Safety Integrity Level of up to SIL3 to be achieved for the instrument loop in a simplex architecture.

Powering Business Worldwide

MTL4501-SR, MTL5501-SR

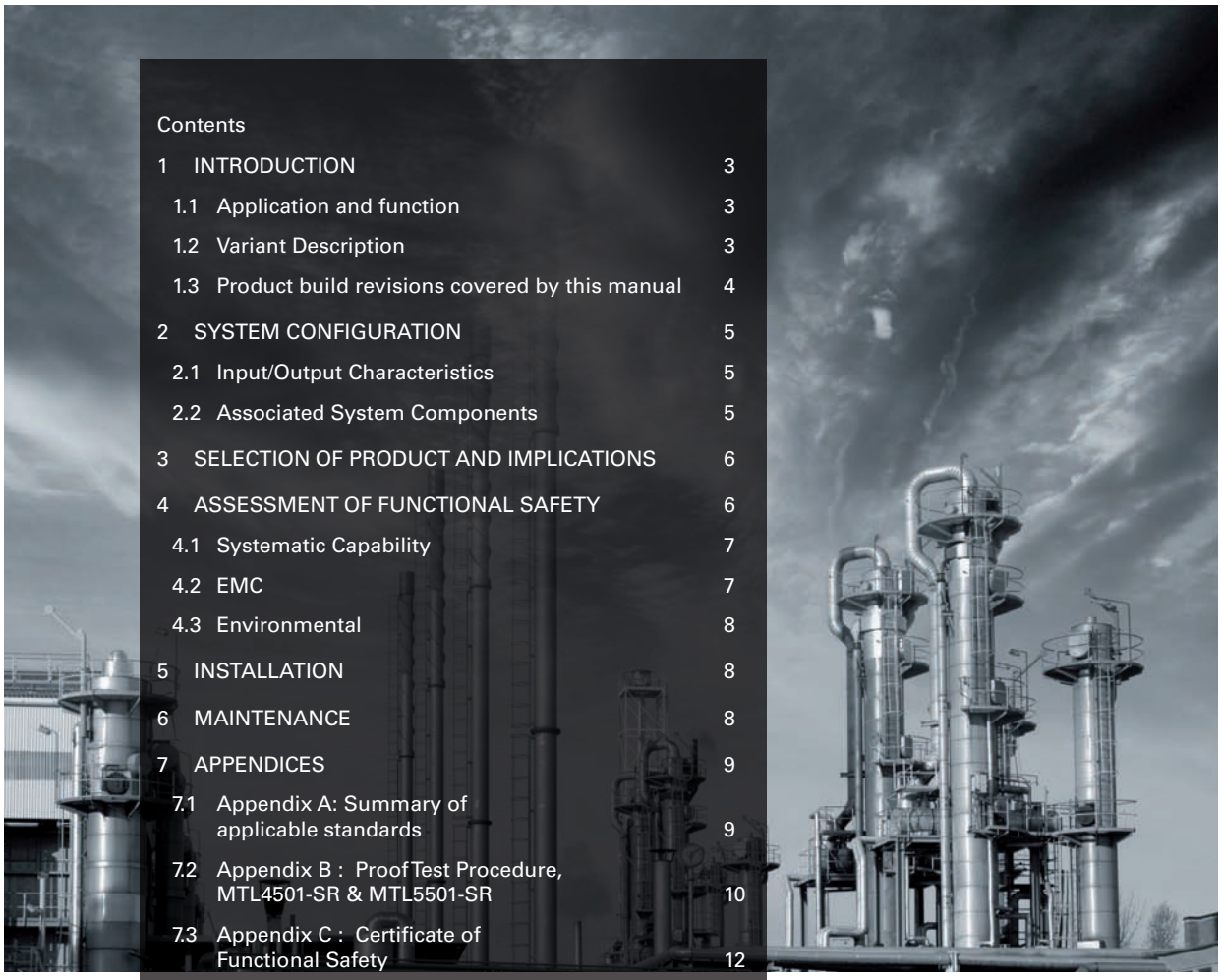

Contents

1 INTRODUCTION 3
1.1 Application and function 3
1.2 Variant Description 3
1.3 Product build revisions covered by this manual 4
2 SYSTEM CONFIGURATION 5
2.1 Input/Output Characteristics 5
2.2 Associated System Components 5
3 SELECTION OF PRODUCT AND IMPLICATIONS 6
4 ASSESSMENT OF FUNCTIONAL SAFETY 6
4.1 Systematic Capability 7
4.2 EMC 7
4.3 Environmental 8
5 INSTALLATION 8
6 MAINTENANCE 8
7 APPENDICES 9
7.1 Appendix A: Summary of applicable standards 9
7.2 Appendix B : Proof Test Procedure, MTL4501-SR & MTL5501-SR 10
7.3 Appendix C : Certificate of Functional Safety 12

FUNCTIONAL SAFETY MANAGEMENT

This manual supports the application of the products in functional-safety related loops. It must be used in conjunction with other supporting documents to achieve correct installation, commissioning and operation. Specifically, the data sheet, instruction manual and applicable certificates for the particular product should be consulted, all of which are available on the MTL web site.

In the interest of further technical developments, we reserve the right to make design changes.

Functional Safety cass Approved Company

sira CERTIFICATION

Baseefa IEC 61508 Product

FSM FUNCTIONAL SAFETY MANAGEMENT IEC 61508:2010

www.mtl-inst.com **mtlenquiry@eaton.com**

1 INTRODUCTION

1.1 Application and function

The MTL4501-SR and MTL5501-SR are intrinsic safety isolators that interface switch or proximity detector devices located in a hazardous area of a process plant. They are also designed and certified according to IEC 61508 for use in safety instrumented systems up to SIL3.

Each MTL4501-SR and MTL5501-SR module provides a voltage-source output in the safe area that is controlled by a switch or proximity detector located in the hazardous area. There are no configuration switches or operator controls to be set on the module.

These modules are members of the MTL4500 and MTL5500 Series of products.

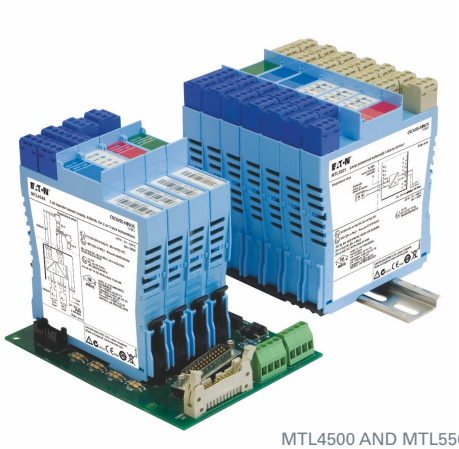

MTL4500 AND MTL5500 range

1.2 Variant Description

Functionally, the MTL4501-SR and MTL5501-SR are the same but the modules differ in their mounting method in the following way:

- MTL4501-SR is designed for backplane mounted applications
- MTL5501-SR is designed for DIN-rail mounting.

Both modules include line fault detection (LFD), although this function is not safety-related.

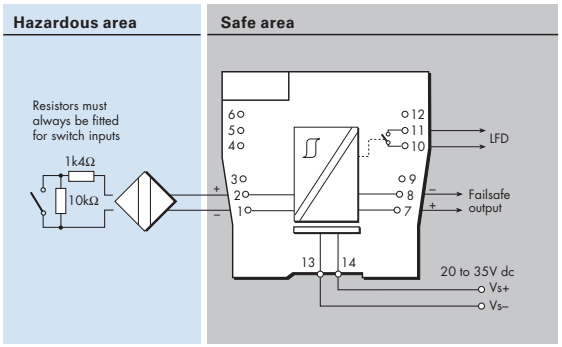

Backplane mounting MTL4501-SR

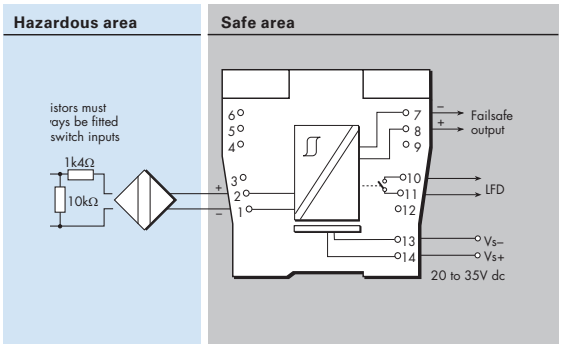

DIN-rail mounting MTL5501-SR

The connections to the field sensor in the hazardous area are the same for both models, and are made through the removable blue connector at terminals 1 & 2. For the safe area, the signal and power connections are made through the connector on the module base for the MTL4501-SR, but for the MTL5501-SR, they are made through the removable grey connectors at the top and side of the module.

Note: *To avoid repetition, the use of the MTL4501-SR model number in this document can be understood to include both models. Individual model numbers will be used only where there is a need to distinguish between them.*

1.3 Product build revisions covered by this manual

The information provided in this manual is valid for the product build revisions listed in the following table:

Model Type	Product build revision covered by this manual
MTL4501-SR	Up to and including 09
MTL5501-SR	Up to and including 09

The product build revision is identified by the field 'CC' in the module Product Identification Number that appears at the bottom left-hand corner of the side label:

The CC field immediately precedes the 7-digit Serial Number field, DDDDDDD. Example:

17284501 - SR07DDDDDDD

Product Build Revision

2 SYSTEM CONFIGURATION

An MTL4501-SR module may be used in single-channel (1oo1) safety functions up to SIL3.

The figure below shows the system configuration and specifies detailed interfaces to the safety related and non-safety-related system components. It does not aim to show all details of the internal module structure, but is intended to support understanding for the application.

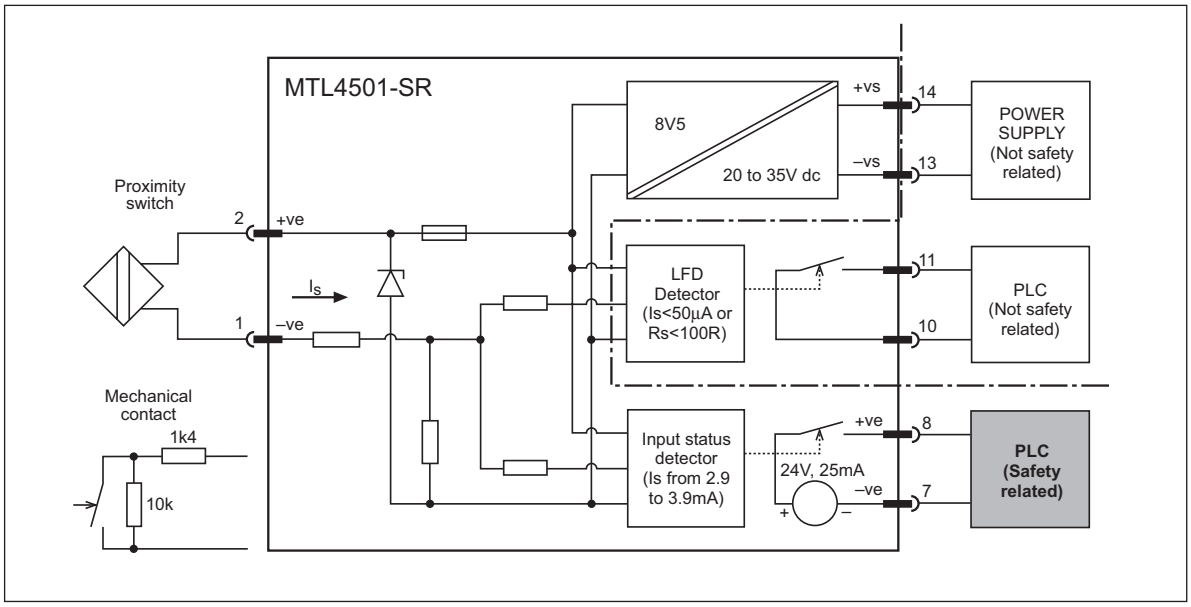

The MTL4501-SR modules are designed to monitor the status of a proximity detector in the hazardous area and to switch ON a voltage output of nominally 24V when the input current is in the range of 2.9 to 3.9mA. The shaded box shows the safety relevant system connection, while the power supply and line-fault connections are not safety-related.

2.1 Input/Output Characteristics

The MTL4501-SR module function (Input/Output characteristics) is shown in the following table

Input Value (Is or Rs) in sensor circuit	Safety-related voltage output	Input line state	LFD contacts
2.9mA < Is < 3.9mA	**ON**	Healthy	CLOSED
Is < 1.9mA or Is > 5.1mA	**OFF**	Healthy	CLOSED
Is < 50µA	**OFF**	Open circuit	OPEN
Rs < 100 Ohm	**OFF**	Short circuit	OPEN

Note: *Only the specifications shown in bold are safety-related; the specifications in italic apply to the non-safety-related line fault detection.*

2.2 Associated System Components

The MTL4501-SR module is a component in the signal path between safety-related sensors and safety-related instruments or control systems.

Input signal sensors may be either suitable proximity sensors or switches. The proximity sensor properties are specified in the standard EN60947-5-6:2001; however, when used with MTL4501-SR modules, additional requirements for the "low-impedance" current of 3.4 ±0.5mA must be met. The following list shows suitable proximity sensors, all manufactured by Pepperl+Fuchs Group, Germany, and specified as usable to SIL3, according to IEC 61508.

SJ 2-SN	**NJ 4-12GK-SN**	**NJ 10-30GK-SN**
SJ 3,5-SN	**NJ 5-18GK-SN**	**NJ 15-30GK-SN**
SJ 3,5-S1N	**NJ 8-18GK-SN**	**NJ 6S1+U1+N**
NJ 2-11-SN	**NJ 6-22-SN**	**NJ 15S+U1+N**
NJ 2-11-SN-G	**NJ 6-22-SN-G**	**NJ 20S+U1+N**
NJ 2-12GK-SN	**NJ 5-30GK-S1N**	**NJ 40-FP-SN-P1**

If switch inputs are being used, rather than proximity sensors, resistors must always be fitted in series with, and across, the switch contact in the field. This enables the MTL4501-SR to detect and act upon line fault conditions as well as identifying the closed or open situation of the switch.

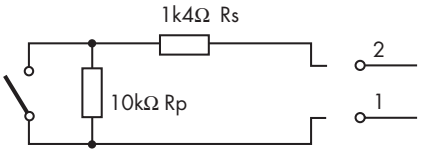

(Resistors must always be fitted to switch inputs)

The resistors should be fitted as close to the field switch as possible (i.e. not fitted across the terminals of the isolator) to maximise the effectiveness of the line monitoring.

The programmable logic control equipment is required to have a voltage input, with an input resistance in the range of 750 ohms to 10k ohms. It shall have a detection threshold in the range 10V to 20V, so that input voltages higher than the threshold are detected as ON, and voltages lower than the threshold are detected as OFF.

3 SELECTION OF PRODUCT AND IMPLICATIONS

The output signal from the MTL4501-SR is switched OFF when an input OFF state exists; when the field wiring is open or short circuit; or if any internal system fault occurs. This includes power supply failures, which are detected as faults, and the output is then switched OFF. Using an input sensor and logic controller (as defined in section 2) with an MTL4501-SR enables a system loop to be implemented that combines functional safety together with intrinsic safety to meet the requirements of protection against explosion hazards.

The non-safety-related LFD circuitry does not interfere with the safety function and is signalled separately to the monitoring equipment.

The PFDavg for the MTL4501-SR module is less than 10% of the maximum allowable PFDavg for SIL 3, assuming a 1oo1 architecture and a Proof Test interval of 3 years.

4 ASSESSMENT OF FUNCTIONAL SAFETY

These products are for use as a sub-system within a Safety System conforming to the requirements of IEC61508 and enable a Safety Integrity Level of SIL3 to be achieved for the instrument loop in a simplex architecture.

The design features and the techniques/measures used to prevent systematic faults are suitable for the use of the MTL4/5501-SR in safety functions up to SIL3.

The hardware assessment shows that MTL4501-SR and MTL5501-SR Failsafe Switch/Proximity Detector Interfaces have a hardware fault tolerance of 0 are classified as Type A devices ("Non-complex" component with well-defined failure modes)

Refer to the separate IEC61508 assessment document for full information on this subject, but the definitions for product failure of the MTL4501-SR and MTL5501-SR at an ambient temperature of 20°C and 60°C were determined as follows.

Failure mode	Failure rate (FIT) @ 20°C	Failure rate (FIT) @ 60°C
Output stuck ENERGISED	4.7	7.5
Output stuck DE-ENERGISED	285	799
Correct operation (failures have no effect)	178	468

(FITs means failures per 10^9 hours or failures per thousand million hours)

The above failure rates apply to the failsafe voltage output. The line fault detection function (LFD) is not a part of the safety function and so is not included in the failure data.

In this example, the application context is assumed to be: the safety function is to de-energise the output on demand.

The failure modes shown above can then be defined as:

Failure mode	Category
Output stuck ENERGISED	Dangerous undetected, λ_{du}
Output stuck DE-ENERGISED	Safe undetected, λ_{su}
Correct operation	No effect, λ_{ne}

The failure rates for these categories are then (FITs):

Model	λ_{sd}	λ_{su}	λ_{dd}	λ_{du}	λ_{ne}
MTL4501-SR or MTL5501-SR @ 20°C	0	285	0	4.7	178
MTL4501-SR or MTL5501-SR @ 60°C	0	799	0	7.5	468

In this example, the safe failure fraction is 98.3% @ 20°C and 99.1% @ 60°C, so the devices meet the hardware architecture constraints required for use as single devices in Safety Instrumented Functions up to SIL3.

Note: The original assessment was carried out to the first edition of IEC 61508, amendments to the calculation of SFF have been made to align the approach with the second (2010) edition.

4.1 Systematic Capability

The highest Systematic Integrity Level that can be claimed for a safety function in respect of measures, techniques, design features, mitigating the effects of systematic faults is SIL 3.

4.2 EMC

The MTL4501-SR modules are designed for operation in a normal, industrial, electromagnetic environment but, to support good practice, modules should be mounted where they are not subjected to undue conducted or radiated interference, see Appendix A for applicable standards and levels.

4.3 Environmental

The MTL4501-SR modules operate over the temperature range from-20°C to +60°C, and at up to 95% non-condensing relative humidity.

The MTL4501-SR modules are intended to be mounted in a normal industrial environment without excessive vibration, as specified for the MTL4500 & MTL5500 product ranges. See Appendix A for applicable standards and levels.

Continued reliable operation will be assured if exposure to temperature and vibration is within the values given in the specification.

5 INSTALLATION

There are two particular aspects of safety that must be considered when installing the MTL4501-SR modules and these are:

- **Functional safety**
- **Intrinsic safety**

Reference must be made to the relevant sections within the instruction manual for MTL4500 Series (INM4500) or MTL5500 Series (INM5500), which contain basic guides for the installation of the interface equipment to meet the requirements of intrinsic safety. In many countries there are specific codes of practice, together with industry guidelines, which must also be adhered to.

Provided that these installation requirements are followed, there are no additional factors to meet the needs of IEC61508.

To guard against the effects of dust and water the modules should be mounted in an enclosure providing at least IP54 protection, or the mounting location should provide equivalent protection, such as inside an equipment cabinet.

6 MAINTENANCE

To follow the guidelines pertaining to operation and maintenance of intrinsically safe equipment in a hazardous area, yearly periodic audits of the installation are required by the various codes of practice.

In addition, proof-testing of the loop operation to ensure that it conforms with functional safety requirements should be carried out at the intervals determined by safety case assessment. Refer to Appendix B for the proof testing procedure of the MTL4501-SR.

Note that there may also be specific requirements laid down in the E/E/PE operational maintenance procedure for the complete installation.

If an MTL4501-SR or MTL5501-SR is found to be faulty during commissioning or during the normal lifetime of the product then such failures should be reported to MTL. When appropriate, a Returned Material Authorization (RMA) will be notified to enable the return of the unit to the factory for analysis. If the unit is within the warranty period then a replacement unit will be sent.

Consideration should be made of the normal lifetime for a device of this type which would be in the region of ten years.

7 APPENDICES

7.1 Appendix A: Summary of applicable standards

This annex lists all standards referred to in the previous sections of this document:

IEC 61508:2000 **IEC 61508-2:2010**	Functional safety of electrical/electronic/programmable electronic safety-related systems. Parts 1 and 2 as relevant
EN 60947-5-6:2001	Control circuit devices and switching elements- DC interface for proximity sensors and switching amplifiers (NAMUR)
EN 61131-2:2003	Programmable controllers – Part 2: Equipment requirement and tests (EMC requirements)
EN 61326-1:2006	Electrical equipment for measurement, control and laboratory use – EMC requirements. (Criterion A)
IEC 61326-3-1:2008	Electrical equipment for measurement, control and laboratory use – EMC requirements – Part 3-2: Immunity requirements for equipment performing or intended to perform safety related functions (functional safety) – Industrial applications with specific EM environment. (Criterion FS)
NE21:2007	Electromagnetic Compatibility of Industrial Process and Laboratory Control Equipment. (Criterion A)
Lloyds Register Type Approval System: 2002, Test Specification Number 1.	(specifically vibration: 1.0mm displacement @ 5 to 13.2Hz and 0.7G acceleration @13.2Hz to 100Hz per IEC60068-2-6, test Fc)

7.2 Appendix B : Proof Test Procedure, MTL4501-SR & MTL5501-SR

MTLx501-SR Proof Test Procedure

Test sequence:

1. System –Normal operation test
2. Input/Output characteristic functional safety test.
3. System- Normal operation test

1. System - Normal operation test

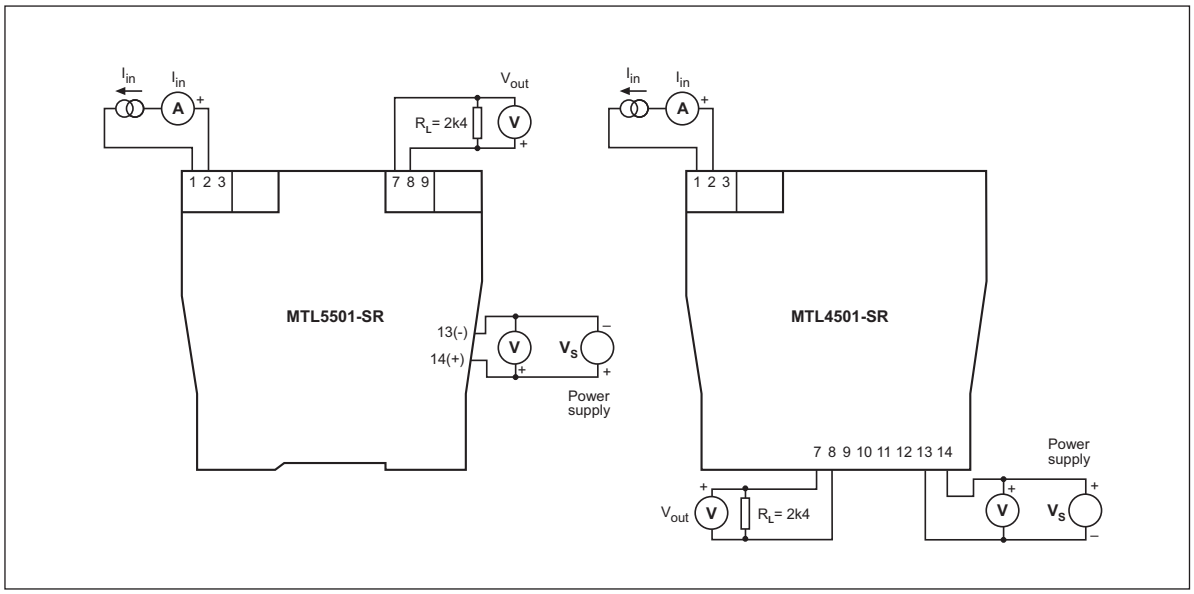

Ensure that the module to be tested operates normally in its target system, without errors and in energised mode (so that just the green power and the yellow Status LEDs are ON).

If the module happens to be connected in a faulty or de-energised loop, restore normal fault free and energised conditions before testing.

2. Input/Output characteristic functional safety test

Observe normal anti-static precautions when handling equipment during device testing.

Remove the unit from the target system and connect the appropriate model as shown in Figure 1. Please note that it is also acceptable for the unit to be left in the target system, as long as terminals 1, 2, 7 and 8 are disconnected from the system and available for test. For the backplane mounted MTL4501-SR, use a separate CPS01 backplane to facilitate access to the power and output connections.

The power supply, V_s (nominal 24.0V, min/max. range 20.0 to 35.0V) should be connected between terminals 13 (–ve) and 14 (+ve). The input signal should be applied as a "current sink" in the range from 2.0 to 4.8mA with a setting accuracy of ±50µA and measured with an accuracy better than 10µA. The output should be loaded with resistor R_L = 2k4 ±1%. Please note, that on MTL4501-SR, the + terminal of the voltmeter should connected to terminal 7 and on MTL5501-SR to terminal 8.

Check that the Output Status LED and the Output Voltage information respond correctly to the specifications in Table 1 below. Record the supply voltage V_s, the applied input current values I_{in} and the output voltage values V_{out}.

Table 1

Test No.	I_{in} sink current (term. 1 & 2)	Output Status LED	Output voltage	Record		Result (Pass/Fail)
				(Actual) I_{in}	V_{out}	
1	2.0mA	OFF	< 5.0V			
2	4.8mA	OFF	< 5.0V			
3	3.9mA	ON	≥ 22.8V			
4	2.9mA	ON	≥ 22.8V			

3 SYSTEM - NORMAL OPERATION TEST

Disconnect the test setup from the unit and reconnect the original system configuration.

Make sure, as before, that the tested unit operates normally in the target system, without errors and in the energised mode, with only the green Power (PWR) and the yellow Status (O/P) LEDs both on.

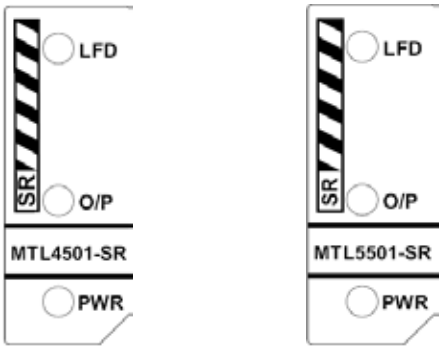

Module front labels showing LED positions

7.3 Appendix C : Certificate of Functional Safety

Certificate Number
Baseefa09SR0140

Baseefa
IEC 61508
Product

Issued 12 August 2009
Page 1 of 4

1 **TYPE EXAMINATION CERTIFICATE**

2 **IEC 61508 Functional Safety of Electrical/Electronic/Programmable Electronic Safety Related Systems – Equipment forming a defined Subsystem -**

3 Type Examination Certificate Number: **Baseefa09SR0140**

4 Equipment: **MTL4501-SR / MTL5501-SR**

5 Manufacturer: **Measurement Technology Limited**

6 Address: **Great Marlings, Butterfield, Luton, Bedfordshire, LU2 8DL, UK**

7 This equipment and any acceptable variation thereto is specified in the schedule to this certificate and the documents therein referred to.

8 Baseefa certifies that this equipment has been found to comply with the requirements of the following standard.

IEC 61508-1:1998 & IEC 61508-2:2000 (in respect of requirements related to sub-systems)

9 The examination and test results are recorded in confidential Report No. **08(C)0295**

10 If the sign "X" is placed after the certificate number, it indicates that the equipment is subject to special conditions of safe use specified in the schedule to this certificate.

11 This TYPE EXAMINATION CERTIFICATE has been prepared using the CASS methodology and relates only to the design of the specified equipment. Provided that the manufacturer maintains a production system in accordance with the ATEX Directive, extended to include the requirements of IEC 61508 and confirmed by the issue of a Quality Assurance Notification from Baseefa, the equipment may be marked with the Baseefa IEC 61508 certification mark reproduced above.

12 The highest Safety Integrity Level that can be claimed for a safety function in which this equipment is an essential single in-line subsystem is:

SIL 3

Note that the SIL of the Safety System in which this equipment is integrated may vary from that indicated for the equipment alone, according to the method of integration and other factors.

This certificate may only be reproduced in its entirety, without any change, schedule included.

Baseefa Customer Reference No. **0703**

Project File No. **08/0295**

This certificate is granted subject to the general terms and conditions of Baseefa. It does not necessarily indicate that the equipment may be used in particular industries or circumstances.

cass

R S SINCLAIR

DIRECTOR
On behalf of
Baseefa

Baseefa
Rockhead Business Park, Staden Lane,
Buxton, Derbyshire SK17 9RZ
Telephone +44 (0) 1298 766600 Fax +44 (0) 1298 766601
e-mail info@baseefa.com web site www.baseefa.com
Baseefa is a trading name of Baseefa Ltd
Registered in England No. 4305578. Registered address as above.

Schedule

15 Equipment Description

The MTL4501-SR and MTL5501-SR are intrinsic safety isolators that interface proximity detector devices or switches, located in a hazardous area of a process plant with non intrinsic safety equipment located in a non hazardous area. Each module enables a voltage-source output in the safe area to be controlled by a switch or proximity detector located in the hazardous area, and includes line fault detection, although this function is not safety-related. The units are designed to turn on a voltage-source output of nominally 24V for input currents between 2.9mA and 3.9mA, and turn the output off for input currents less the 1.9mA or greater than 5.1mA.

The equipment comprises of a single PCB, housed in a plastic enclosure. The MTL4501-SR and MTL5501-SR are functionally identical units, the MTL4501-SR being designed for backplane mounted applications and the MTL5501-SR for DIN rail mounting.

Electrical connections are made to the apparatus via suitable terminals, plugs and sockets.

The MTL4501-SR/MTL5501-SR are also certified for connection to intrinsically safe equipment or simple apparatus located in potentially explosive atmospheres and this is covered by certificates; IECEx BAS 08.0031 and Baseefa08ATEX0081 (MTL4501-SR), IECEx BAS 08.0032 and Baseefa08ATEX0082 (MTL5501-SR).

The safety function under consideration is the ability to de-energise the voltage output under defined input current and fault conditions.

16 Subsystem Parameters in accordance with IEC 61508-2 Clause 7.4.7.3

a) Functional Specification

The MTL4501-SR and MTL5501-SR are intrinsic safety isolators that interface switch or proximity detector devices located in a hazardous area of a process plant with non intrinsic safety equipment located in a non hazardous area. An input current between 2.9mA and 3.9mA produces an output of approximately 24V and an input current of less than 1.9mA or more than 5.1mA produces an output voltage of approximately 0V (≤5V). A false 24V output when the input is less than 1.9mA or more than 5.1mA is the only condition considered to be a dangerous failure. The device is intended to be used in a functional safety loop meeting the requirements of IEC61508 for up to SIL3.

b) Estimated Rates of Dangerous Failure Detected by Diagnostic Tests

$\Sigma\lambda_{DD}$ = 0 failures/million hours. The device contains no internal diagnostics.

c) Estimated Rates of Dangerous Failure Undetected by Diagnostic Test

$\Sigma\lambda_{DU}$ = 0.0074 failures/million hours,
failures that prevent the output from being de-energised (representing 7.45% of the allowed $\Sigma\lambda_{DU}$ for a SIL of 3)

d) Environmental Limits

Maximum ambient is 60°C. All other environmental limits are defined in the Installation, Operating, Maintenance and Safety Instructions for the MTL 4501-SR/MTL5501-SR.

e) Lifetime Limits

The units have an anticipated lifetime of 15 years.

f) Periodic Proof Test and Maintenance

There is no limit on the proof test interval although the manufacturer recommends as good practice that a proof test to the procedure detailed in Appendix B of the Safety Manual be carried out at least once every 3 years. The system designer is responsible for specifying a proof test interval appropriate to the application.

(For the purpose of calculating a notional probability of failure on demand it has been assumed that the Proof Test Procedure will be performed at regular intervals not exceeding 1 year.)

Physical deterioration is inspected for at the proof test interval.

g) Diagnostic Coverage

The Diagnostic Coverage is 0%.

h) Diagnostic Test Interval

Not applicable as there are no diagnostics.

i) Additional Information

j) Safe Failure Fraction

The Safe Failure Fraction for the function described at (a) is 99.4%

The overall failure rate $\Sigma\lambda$ is 1.27 E-6 failures/ hour
The safe failure rate $\Sigma\lambda_s$ is 1.27 E-6 failures/ hour
The dangerous detected failure rate $\Sigma\lambda_{DD}$ is 0 failures/ hour
The dangerous undetected failure rate $\Sigma\lambda_{DU}$ is 7.45 E-9 failures/ hour

k) Hardware Fault Tolerance

The Hardware Fault Tolerance of the components capable of preventing the voltage output from being de-energised is 0 (1oo1).

l) Application Limits

None other than those covered in d) above.

m) Safety Integrity Level (systematic)

The highest Safety Integrity Level that can be claimed for a safety function which uses this equipment in respect of: measures, techniques, design features, mitigating the effects of systematic faults is SIL3.

Probability of Failure on Demand (PFD_{avg})

The following information regarding PFD_{avg} has been included at the request of the manufacturer.
The PFD_{avg} is $(\Sigma\lambda_{DU}/2)*T_p$ (where T_p is the proof test interval). As an example if the T_p is 1 year, then this would give a PFD_{avg} of 3.26E-5 which represents 3.26% of the PFD_{avg} allowed for SIL3.

n) Configuration Management

The hardware is identified by the documentation listed in section 18 below which is applicable to all manufacture from the date of this certificate. Applicability of the certificate to future modifications will be confirmed by the issue of supplementary certification, listing updated documentation.

o) Documentary Evidence of Validation.

This certificate provides documentary evidence of validation. Associated confidential Certification Report 08(C)0295 details the evidence used in the validation process.

17 Special Conditions for Safe Use

None.

18 Drawings and Documents

Drawing	Sheets	Date	Revision	Title
AD4500-1	1 to 4	09/2008	6	MTL4500 FINAL ASSEMBLY- Top level assembly drawing
AD5500-1	1 to 4	01/2009	5	MTL5500 FINAL ASSEMBLY – Top level assembly drawing
00010558	1 of 1	04/07/08	1	MTL4501 Functional Block Diagram
TC4501-1	1 of 1	11/2008	1	MTL4501 FINAL ASSEMBLY - Schematic
001-1317	1 of 1	11/2008	1	MTL4501 PCB level assembly drawing
PLE4501-3	1 to 3	01/10/2008	1	PCB ASSEMBLY – Bill of materials for PCB level assembly
AD4501-3	1 of 1	11/2008	1	PCB ASSEMBLY – PCB level assembly drawing
TP4501-3/1	1 to 6	11/2008	1	INTERMEDIATE ASSEMBLY – Test procedure
00012147	1 to 10	29/6/9	2	MTL4501-SR MTL5501-SR Safety Manual

The safety you rely on.

See the complete MTL product portfolio at **www.mtl-inst.com**

For more information:
If further assistance is required, please contact an authorised MTL Distributor, Sales Office, or Customer Service Department

AUSTRALIA
Eaton Electrical (Australia) Pty Ltd,
10 Kent Road, Mascot, New South Wales, 2020, Australia
Tel: +61 1300 308 374 Fax: +61 1300 308 463
E-mail: mtlsalesanz@eaton.com

BeNeLux
MTL Instruments BV
Ambacht 6, 5301 KW Zaltbommel
The Netherlands
Tel: +31 (0)418 570290 Fax: +31 (0)418 541044
E-mail: mtl.benelux@eaton.com

CHINA
Cooper Electric (Shanghai) Co. Ltd
955 Shengli Road, Heqing Industrial Park
Pudong New Area, Shanghai 201201
Tel: +86 21 2899 3817 Fax: +86 21 2899 3992
E-mail: mtl-cn@eaton.com

FRANCE
MTL Instruments sarl,
7 rue des Rosiéristes, 69410 Champagne au Mont d'Or
France
Tel: +33 (0)4 37 46 16 53 Fax: +33 (0)4 37 46 17 20
E-mail: mtlfrance@eaton.com

GERMANY
MTL Instruments GmbH,
Heinrich-Hertz-Str. 12, 50170 Kerpen, Germany
Tel: +49 (0)22 73 98 12- 0 Fax: +49 (0)22 73 98 12- 2 00
E-mail: csckerpen@eaton.com

INDIA
MTL India,
No.36, Nehru Street, Off Old Mahabalipuram Road
Sholinganallur, Chennai- 600 119, India
Tel: +91 (0) 44 24501660 /24501857 Fax: +91 (0) 44 24501463
E-mail: mtlindiasales@eaton.com

ITALY
MTL Italia srl,
Via San Bovio, 3, 20090 Segrate, Milano, Italy
Tel: +39 02 959501 Fax: +39 02 95950759
E-mail: chmninfo@eaton.com

JAPAN
Cooper Crouse-Hinds Japan KK,
MT Building 3F, 2-7-5 Shiba Daimon, Minato-ku,
Tokyo, Japan 105-0012
Tel: +81 (0)3 6430 3128 Fax: +81 (0)3 6430 3129
E-mail: mtl-jp@eaton.com

NORWAY
Norex AS
Fekjan 7c, Postboks 147,
N-1378 Nesbru, Norway
Tel: +47 66 77 43 80 Fax: +47 66 84 55 33
E-mail: info@norex.no

RUSSIA
Cooper Industries Russia LLC
Elektrozavodskaya Str 33
Building 4
Moscow 107076, Russia
Tel: +7 (495) 981 3770 Fax: +7 (495) 981 3771
E-mail: mtlrussia@eaton.com

SINGAPORE
Eaton Electric (Singapore) Pte Ltd
100G Pasir Panjang Road
Interlocal Centre
#07-08 Singapore 118523
#02-09 to #02-12 (Warehouse and Workshop)
Tel: +65 6 645 9888 ext 9864/9865
Fax: +65 6 645 9811
E-mail: sales.mtlsing@eaton.com

SOUTH KOREA
Cooper Crouse-Hinds Korea
7F. Parkland Building 237-11 Nonhyun-dong Gangnam-gu,
Seoul 135-546, South Korea.
Tel: +82 6380 4805 Fax: +82 6380 4839
E-mail: mtl-korea@eaton.com

UNITED ARAB EMIRATES
Cooper Industries/Eaton Corporation
Office 205/206, 2nd Floor SJ Towers, off. Old Airport Road,
Abu Dhabi, United Arab Emirates
Tel: +971 2 44 66 840 Fax: +971 2 44 66 841
E-mail: mtlgulf@eaton.com

UNITED KINGDOM
Eaton Electric Ltd,
Great Marlings, Butterfield, Luton
Beds LU2 8DL
Tel: +44 (0)1582 723633 Fax: +44 (0)1582 422283
E-mail: mtlenquiry@eaton.com

AMERICAS
Cooper Crouse-Hinds MTL Inc.
3413 N. Sam Houston Parkway W.
Suite 200, Houston TX 77086, USA
Tel: +1 281-571-8065 Fax: +1 281-571-8069
E-mail: mtl-us-info@eaton.com

Powering Business Worldwide

Eaton Electric Limited,
Great Marlings, Butterfield, Luton
Beds, LU2 8DL, UK.
Tel: + 44 (0)1582 723633 Fax: + 44 (0)1582 422283
E-mail: mtlenquiry@eaton.com
www.eaton.com

© 2024 Eaton
All Rights Reserved

Publication No. SM45-5501-SR rev 3 160424
April 2024

EUROPE (EMEA):
+44 (0)1582 723633
mtlenquiry@eaton.com

THE AMERICAS:
+1 800 835 7075
mtl-us-info@eaton.com

ASIA-PACIFIC:
+65 6 645 9888
sales.mtlsing@eaton.com

The given data is only intended as a product description and should not be regarded as a legal warranty of properties or guarantee. In the interest of further technical developments, we reserve the right to make design changes.

Connect with Eaton, MTL: