MTL4500/5500 range

Intrinsically safe galvanic isolators

- **3-port isolation as standard**
- **Highest module/channel packing densities**
- **Low power dissipation**
- **Quick install and release mechanism**
- **Multi-channel I/O modules**
- **Broken line monitoring**
- **Compatible with preceding MTL isolator range for pluggable replacements**
- **Various models assessed for use in Functional Safety applicatons**

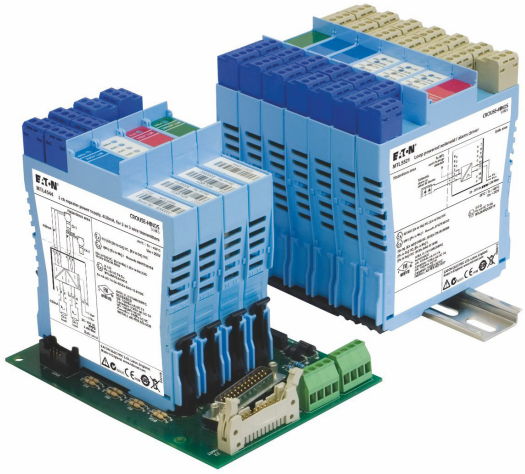

Eaton's latest generation of MTL IS interfaces utilises an innovative "One-Core" technology to ensure the highest quality and availability while maintaining maximum flexibility at lowest cost. Incorporating advanced circuit design, a common set of components and innovative isolating transformer construction, they achieve a significant reduction in power consumption while increasing channel packing densities. The compact, 16mm wide design reduces weight and gives exceptionally high packing density. They build on the proven success of the MTL2000, 3000, 4000 and 5000 range to bring the benefits of new developments in galvanic isolation without compromising the reliability of the designs from which they have evolved.

The backplane mounting MTL4500 range is designed with system vendors in mind for "project-focussed" applications such as Distributed Control System (DCS), Emergency Shutdown Systems (ESD) and Fire and Gas monitoring (F&G).

The reduced power consumption and high efficiency enable high signal density to be achieved together with improved freedom in cabinet layout and design. Easy integration with the input/output assemblies of control or safety instrumentation systems not only simplifies project engineering but also reduces installation and maintenance costs.

A multiway connector to the backplane provides safe-area and power supply connections, while hazardous-area connections plug into the front of the module, simplifing installation and maintenance and reducing time, cost, and the risk of errors.

The DIN-rail mounting MTL5500 range meets the needs of the IS interface market for "application focussed" projects, ranging from single instrument loops, through to fully equipped cabinets, across all industries where hazardous areas exist.

The MTL5500 clips quickly onto DIN rail, so it is compatible with the industry-standard mounting system. Wiring is simplified by plug-in safe- and hazardous-area connectors, and a power plug which accepts a power bus; it all leads to quicker insertion, fewer wiring errors and trouble-free, tidier installations.

Line fault detection (LFD) facilities are provided across the range of I/O functions; on the switch/proximity detectors, the MTL4523/5523 solenoid/alarm drivers and the isolating drivers. Analogue input units such as the MTL4541/5541 provide line fault detection by repeating o/c or s/c currents to the safe-area control system.

Status LEDs, configuration switches and ports are located on the top or side of individual modules, as appropriate, for easy access.

Both ranges have been designed for compatiblity with earlier models. The MTL4500 range provides plug-replacements for the earlier MTL4000 units, while the MTL5500 range can easily replace MTL5000 units. Each offer the latest in modern technology and efficiency without compromise.

In addition to their use in IS circuits, specific models within the MTL4500 and MTL5500 range have been assessed and approved for use in Functional Safety applications. These have been verified under the certified Functional Safety Management (FSM) programme implemented by our MTL product line.

Powering Business Worldwide

Eaton Electric Limited,
Great Marlings, Butterfield, Luton
Beds, LU2 8DL, UK.
Tel: + 44 (0)1582 723633 Fax: + 44 (0)1582 422283
E-mail: mtlenquiry@eaton.com
www.mtl-inst.com

© 2025 Eaton
All Rights Reserved
Publication No. EPS 45/5500 Rev 17
April 2025

EUROPE (EMEA):
+44 (0)1582 723633
mtlenquiry@eaton.com

THE AMERICAS:
+1 800 835 7075
mtl-us-info@eaton.com

ASIA-PACIFIC:
+65 6 645 9888
sales.mtlsing@eaton.com

The given data is only intended as a product description and should not be regarded as a legal warranty of properties or guarantee. In the interest of further technical developments, we reserve the right to make design changes.

ISOLATOR FUNCTION SELECTOR

MTL4500 (Backplane)	*MTL5500 (DIN-rail)*	*FSM*	*Channels*	*Function*
Digital Input				
MTL4501-SR	MTL5501-SR	√	1	fail-safe solid-state output + LFD alarm
MTL4504	–	√	1	switch/prox input, phase reversal + LFD
MTL4510	MTL5510		4	switch/prox input, solid-state output
MTL4510B	MTL5510B		4	multi-function switch/prox input, solid-state output
MTL4511	MTL5511	√	1	switch/prox input, c/o relay output
MTL4513	MTL5513		2	switch/prox input, solid-state output
MTL4514/B	MTL5514/MTL5514-T	√	1	switch/prox input, relay + LFD
MTL4514D	MTL5514D	√	1	switch/prox input, dual output relay
MTL4514N	–	√	1	switch/prox input, relay + LFD
MTL4516	–	√	2	switch/prox input, relay + LFD outputs
MTL4516C	MTL5516C	√	2	switch/prox input, c/o relay + LFD outputs
MTL4517	MTL5517	√	2	switch/prox input, relay + LFD outputs
Digital Output				
MTL4521	MTL5521/MTL5521-T	√	1	loop powered solenoid driver
MTL4521L	–	√	1	loop powered solenoid driver, IIC
–	MTL5522	√	1	loop powered solenoid driver, IIB
MTL4523	MTL5523	√	1	solenoid driver with LFD
MTL4523L	–	√	1	loop powered solenoid driver with LFD
MTL4523R	–	√	1	solenoid driver with reverse LFD
MTL4523V/VL	MTL5523V/VL	√	1	solenoid driver with LFD, IIC
MTL4524	MTL5524	√	1	switch operated solenoid driver
MTL4524S	–	√	1	switch operated solenoid driver, 24V override
MTL4525	MTL5525	√	1	switch operated solenoid driver, low power
MTL4526	MTL5526		2	switch operated relay
Pulse & Vibration				
MTL4531	MTL5531	√	1	vibration probe interface
MTL4532	MTL5532		1	pulse isolator, digital or analogue output
Analogue Input				
MTL4541	MTL5541/MTL5541-T	√	1	2/3 wire transmitter repeater
MTL4541A	MTL5541A	√	1	transmitter repeater, passive input
MTL4541AS	MTL5541AS	√	1	transmitter repeater, passive input, current sink
MTL4541S	MTL5541S/MTL5541S-T	√	1	2/3 wire transmitter repeater, current sink
MTL4541T	–		1	2/3 wire transmitter repeater, long cables
MTL4544	MTL5544	√	2	2/3 wire transmitter repeater
MTL4544A	MTL5544A	√	2	transmitter repeater, passive input
MTL4544AS	MTL5544AS	√	2	transmitter repeater, passive input, current sink
MTL4544S	MTL5544S	√	2	2/3 wire transmitter repeater, current sink
MTL4544D	MTL5544D	√	1	2/3 wire transmitter repeater, dual output
Analogue Output				
MTL4546	MTL5546	√	1	4-20mA smart isolating driver + LFD
MTL4546S	–		1	4-20mA smart isolating driver + LFD
MTL4546Y	MTL5546Y/MTL5546Y-T	√	1	4-20mA smart isolating driver + oc LFD
MTL4549	MTL5549	√	2	4-20mA smart isolating driver + LFD
MTL4549Y	MTL5549Y	√	2	4-20mA smart isolating driver + oc LFD
Fire & Smoke				
MTL4561	MTL5561	√	2	loop-powered, for fire and smoke detectors
Temperature Input				
MTL4573	MTL5573		1	temperature converter, THC or RTD
MTL4575	MTL5575		1	temperature converter, THC or RTD
MTL4576-RTD	MTL5576-RTD		2	temperature converter, RTD
MTL4576-THC	MTL5576-THC		2	temperature converter, THC
MTL4581	MTL5581		1	mV/mV isolator
MTL4582B	MTL5582B	√	1	RTD/RTD isolator
General				
MTL4599	MTL5599		–	dummy module
MTL4599N	–		–	general purpose feed-through module

Powering Business Worldwide

Eaton Electric Limited,
Great Marlings, Butterfield, Luton
Beds, LU2 8DL, UK.
Tel: + 44 (0)1582 723633 Fax: + 44 (0)1582 422283
E-mail: mtlenquiry@eaton.com
www.eaton.com

© 2024 Eaton
All Rights Reserved
Publication No.
EPS45/5500 Rev13 150517

EUROPE (EMEA):
+44 (0)1582 723633 mtlenquiry@eaton.com
THE AMERICAS:
+1 800 835 7075 mtl-us-info@eaton.com
ASIA-PACIFIC:
+65 6 645 9888 sales.mtlsing@eaton.com

MTL4501-SR – MTL5501-SR
FAIL-SAFE SWITCH/PROXIMITY-DETECTOR INTERFACE
with LFD

With the MTLx501-SR, a fail-safe switch/proximity detector located in the hazardous area can control an isolated fail-safe electronic output. The MTLx501-SR also provides relay alarm contacts to signal line-fault conditions. The MTLx501-SR is for use with approved fail-safe sensors in loops that require operation up to SIL3 according to the functional safety standard IEC 61508.

SPECIFICATION

See also common specification

Number of channels
One

Location of switches
Zone 0, IIC, T6 hazardous area
Div. 1, Group A hazardous location

Location of proximity detector
Zone 0, IIC, T4–6, hazardous location
Div 1, Group A, hazardous location

Voltage applied to sensor
8.6V dc max from 1kΩ

Input/output characteristics

Input value in sensor circuits	Fail–safe output	Operation	LFD contacts
2.9mA < Is < 3.9mA	ON	Normal	CLOSED
Is < 1.9mA & Is > 5.1mA	OFF	Normal	CLOSED
Is < 50µA	OFF	Broken line	OPEN
Rs < 100Ω	OFF	Shorted line	OPEN

Note: Is = sensor current

Fail-safe electronic output
Output on: 24V nominal
Output off: 0V dc, max < 5V dc
Load: 750Ω to 10kΩ
Maximum on-state current: 25mA (at 750Ω)
Short-circuit current: 30mA

Line fault detection (LFD)
LFD relay output: contacts open when line fault detected
Switch characteristics: 0.3A 110V ac/dc; 1A 35V dc; 30W/33VA

LED indicators
Green: power indication
Yellow: channel status, on when fail-safe output energised
Red: LFD indication, flashing when line fault detected

MTL4501-SR

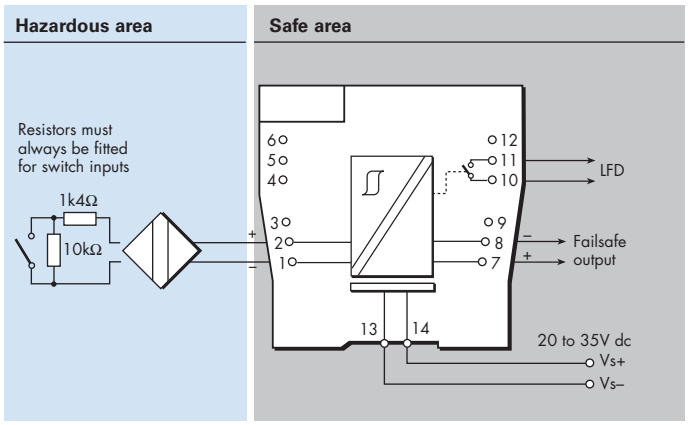

MTL5501-SR

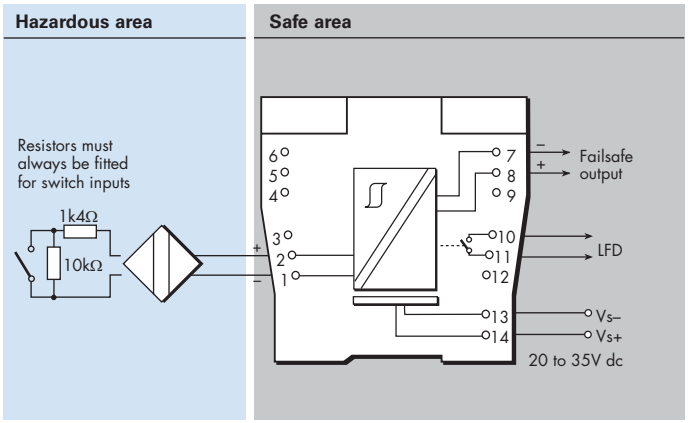

Power requirements, Vs

@ Supply voltage	750Ω load	typ. load
20V dc	100mA	70mA
24V dc	90mA	60mA
35V dc	65mA	45mA

Power dissipation within unit

@ Supply voltage	750Ω load	typ. load
20V dc	1232mW	1160mW
24V dc	1392mW	1200mW
35V dc	1507mW	1335mW

Safety description
U_o = ±9.7V, I_o = 30mA, P_o = 0.07W, C_i = 0nF, L_i = 0mH
U_m = 253V

SIL capable
Highest level in single in-line subsystem - SIL3 (in accordance with IEC61508-2)
See data on MTL web site and refer to the safety manual.

The given data is only intended as a product description and should not be regarded as a legal warranty of properties or guarantee.
In the interest of further technical developments, we reserve the right to make design changes.

Powering Business Worldwide

Eaton Electric Limited,
Great Marlings, Butterfield, Luton
Beds, LU2 8DL, UK.
Tel: + 44 (0)1582 723633 Fax: + 44 (0)1582 422283
E-mail: mtlenquiry@eaton.com
www.eaton.com

© 2025 Eaton
All Rights Reserved
Publication No.
EPSx501SR Rev5 010916

EUROPE (EMEA):
+44 (0)1582 723633 mtlenquiry@eaton.com
THE AMERICAS:
+1 800 835 7075 mtl-us-info@eaton.com
ASIA-PACIFIC:
+65 6 645 9888 sales.mtlsing@eaton.com

MTL4504
SWITCH/ PROXIMITY DETECTOR INTERFACE
1-channel with LFD and phase reversal

The MTL4504 enables a safe–area load to be controlled, through a relay, by a proximity detector or switch located in a hazardous area. Line faults are signalled through a separate relay and indicated on the top of the module. MTBF information for the LFD relay is available from Eaton to allow the failure rate for the LFD relay to be calculated when used in the critical path with the output relay for safety critical applications. Switches are provided to select phase reversal and to enable the line fault detection.

SPECIFICATION

See also common specification

Number of channels
One

Location of switch
Zone 0, IIC, T6 hazardous area
Div.1, Group A, hazardous location

Location of proximity detector
Zone 0, IIC, T4–6 hazardous area, if suitably certified
Div.1, Group A, hazardous location

Hazardous–area inputs
Inputs conforming to BS EN60947–5–6:2001 standards for proximity detectors (NAMUR)

Voltage applied to sensor
7 to 9V dc from 1kΩ ±10%

Input/output characteristics
Normal phase
Outputs closed if input > 2.1mA (< 2kΩ in input circuit)
Outputs open if input < 1.2mA (> 10kΩ in input circuit)
Hysteresis: 200µA (650Ω) nominal

Line fault detection (LFD) (when selected)
User-selectable via switches on the side of the unit. Line faults are indicated by an LED. Line fault relay is de-energised and channel output relay de-energised if input line-fault detected
Open-circuit alarm on if I_{in} < 50µA
Open-circuit alarm off if I_{in} > 250µA
Short-circuit alarm on if R_{in} < 100Ω
Short-circuit alarm off if R_{in} > 360Ω
Note: Resistors must be fitted when using the LFD facility with a contact input
500Ω to 1kΩ in series with switch
20kΩ to 25kΩ in parallel with switch

Safe-area output
Channel: Single pole relay with changeover contacts
LFD: Single pole relay with changeover contacts
Note: reactive loads must be adequately suppressed

MTL4504

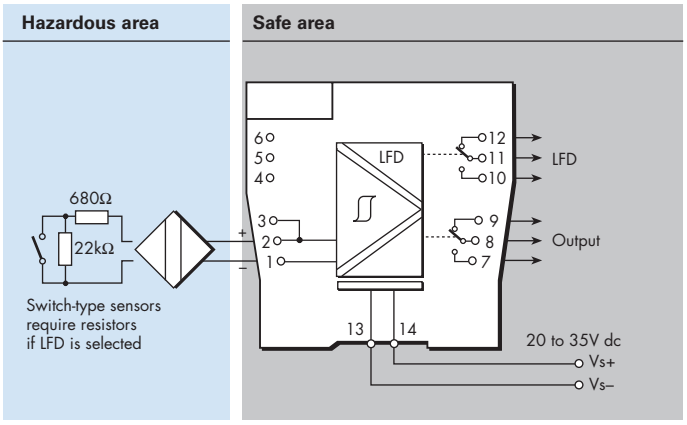

Relay characteristics

	MTL4504
Response time:	10ms maximum
Contact rating (Safe Area):	10W, 0.5A, 35V dc
Contact rating (Zone 2):	10W, 0.5A, 35V dc

LED indicators
Green: power indication
Yellow: channel status, on when output energised
Red: LFD indication, on when line fault detected

Maximum current consumption
25mA at 24V dc

Power dissipation within unit
0.6W at 24V

Safety description
U_o=10.5V I_o=14mA P_o=37mW U_m = 253V rms or dc

SIL capable
These models have been assessed for use in IEC 61508 functional safety applications.
SIL2 capable for a single device (HFT=0)
SIL3 capable for multiple devices in safety redundant configurations (HFT=1)
See data on MTL web site and refer to the safety manual.

The given data is only intended as a product description and should not be regarded as a legal warranty of properties or guarantee.
In the interest of further technical developments, we reserve the right to make design changes.

Eaton Electric Limited,
Great Marlings, Butterfield, Luton
Beds, LU2 8DL, UK.
Tel: + 44 (0)1582 723633 Fax: + 44 (0)1582 422283
E-mail: mtlenquiry@eaton.com
www.eaton.com

© 2025 Eaton
All Rights Reserved
Publication No.
EPS4504 Rev6 240517

EUROPE (EMEA):
+44 (0)1582 723633 mtlenquiry@eaton.com
THE AMERICAS:
+1 800 835 7075 mtl-us-info@eaton.com
ASIA-PACIFIC:
+65 6 645 9888 sales.mtlsing@eaton.com

MTL4510 – MTL5510 SWITCH/ PROXIMITY DETECTOR INTERFACE

4-channel, digital input

The MTLx510 enables four solid-state outputs in the safe area to be controlled by up to four switches or proximity detectors located in a hazardous area. Each pair of output transistors shares a common terminal and can switch +ve or –ve polarity signals. A range of module configurations is available (see Table 1) through the use of selector switches. When proximity detector modes are selected, LFD is enabled and the output switches to OFF if a line fault is detected.

SPECIFICATION

See also common specification

Number of channels
4, configured by switches

Location of switches
Zone 0, IIC, T6 hazardous area
Div 1, Group A hazardous location

Location of proximity detectors
Zone 0, IIC, T4-6 hazardous area if suitably certified
Div 1, Group A, hazardous location

Hazardous-area inputs
Inputs conforming to BS EN60947–5–6:2001 standards for proximity detectors (NAMUR)

Voltage applied to sensor
7 to 9V dc from 1kΩ ±10%

Input/output characteristics

Normal phase
Outputs closed if input > 2.1mA (< 2kΩ in input circuit)
Outputs open if input < 1.2mA (> 10kΩ in input circuit)
Hysteresis: 200µA (650Ω) nominal

Line fault detection (LFD) (When mode 8 to 15 selected)
Open-circuit alarm on if I_{in} < 50µA
Open-circuit alarm off if I_{in} > 250µA
Short-circuit alarm on if R_{in} < 100Ω
Short-circuit alarm off if R_{in} > 360Ω
Note: Resistors must be fitted when using the LFD facility with a contact input
500Ω to 1kΩ in series with switch
20kΩ to 25kΩ in parallel with switch

Safe-area outputs
Floating solid-state outputs compatible with logic circuits

Operating frequency:	dc to 500Hz
Max. off-state voltage:	± 35V
Max. off-state leakage current:	± 50µA
Max. on-state resistance:	25Ω
Max. on-state current:	± 50mA

LED indicators
Green: power indication
Yellow: four: on when output active
Red: LFD indication + faulty channel's yellow LED flashes

Maximum current consumption
40mA at 24V (with all output channels energised)

Power dissipation within unit
0.96W at 24V, with 10mA loads

Safety description (each channel)
U_o=10.5V I_o=14mA P_o=37mW U_m = 253V rms or dc

MTL4510

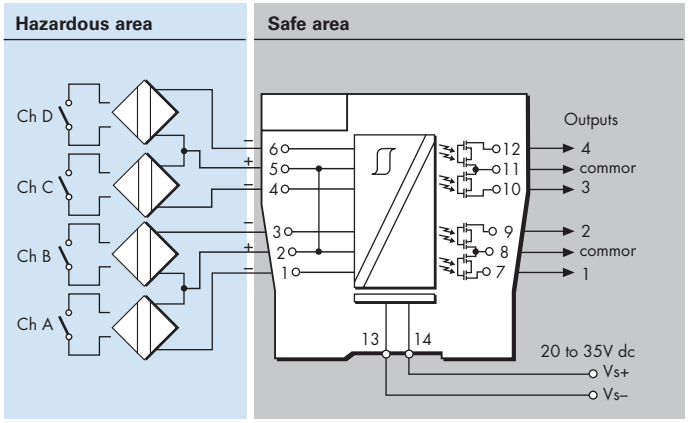

MTL5510

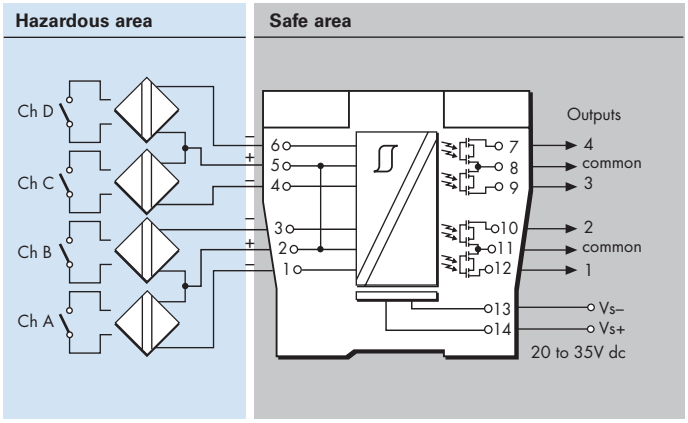

Table 1 - Mode options

MODE	o/p 1	o/p 2	o/p 3	o/p 4	i/p type
0	chA	chB	chC	chD	Switch/Prox. detector
1	chA rev.	chB	chC	chD	
2	chA	chB rev.	chC	chD	
3	chA	chB	chC rev.	chD	
4	chA	chB	chC	chD rev.	
5	chA rev.	chB	chC rev.	chD	
6	chA	chB rev.	chC	chD rev.	
7	chA rev.	chB rev.	chC rev.	chD rev.	
8	chA	chB	chC	chD	Switch/Prox. detector + LFD
9	chA rev.	chB	chC	chD	
10	chA	chB rev.	chC	chD	
11	chA	chB	chC rev.	chD	
12	chA	chB	chC	chD rev.	
13	chA rev.	chB	chC rev.	chD	
14	chA	chB rev.	chC	chD rev.	
15	chA rev.	chB rev.	chC rev.	chD rev.	

See Instruction Manual INM4500 or INM5500 for further mode information.

The given data is only intended as a product description and should not be regarded as a legal warranty of properties or guarantee.
In the interest of further technical developments, we reserve the right to make design changes.

Powering Business Worldwide

Eaton Electric Limited,
Great Marlings, Butterfield, Luton
Beds, LU2 8DL, UK.
Tel: + 44 (0)1582 723633 Fax: + 44 (0)1582 422283
E-mail: mtlenquiry@eaton.com
www.eaton.com

© 2025 Eaton
All Rights Reserved
Publication No.
EPSx510 Rev 5 230524

EUROPE (EMEA):
+44 (0)1582 723633 mtlenquiry@eaton.com
THE AMERICAS:
+1 800 835 7075 mtl-us-info@eaton.com
ASIA-PACIFIC:
+65 6 645 9888 sales.mtlsing@eaton.com

MTL4510B – MTL5510B SWITCH/ PROXIMITY DETECTOR INTERFACE

4-channel, multi-function, digital input

The MTLx510B enables four solid-state outputs in the safe area to be controlled by up to four switches or proximity detectors located in a hazardous area. Each pair of output transistors shares a common terminal and can switch +ve or –ve polarity signals. A range of module configurations is available (see Table 1) through the use of selector switches. These include start/stop operations and pulse output modes.

SPECIFICATION

See also common specification

Number of channels
4, configured by switches

Location of switches
Zone 0, IIC, T6 hazardous area
Div 1, Group A hazardous location

Location of proximity detectors
Zone 0, IIC, T4-6 hazardous area if suitably certified
Div 1, Group A, hazardous location

Hazardous-area inputs
Inputs conforming to BS EN60947–5–6:2001 standards for proximity detectors (NAMUR)

Voltage applied to sensor
7 to 9V dc from 1kΩ ±10%

Input/output characteristics

Normal phase
Outputs closed if input > 2.1mA (< 2kΩ in input circuit)
Outputs open if input < 1.2mA (> 10kΩ in input circuit)
Hysteresis: 200µA (650Ω) nominal

Line fault detection (LFD) (When mode with LFD is selected)
Open-circuit alarm on if I_{in} < 50µA
Open-circuit alarm off if I_{in} > 250µA
Short-circuit alarm on if R_{in} < 100Ω
Short-circuit alarm off if R_{in} > 360Ω
Note: Resistors must be fitted when using the LFD facility with a contact input
500Ω to 1kΩ in series with switch
20kΩ to 25kΩ in parallel with switch

Safe-area outputs
Floating solid-state outputs compatible with logic circuits

Operating frequency:	dc to 500Hz
Max. off-state voltage:	± 35V
Max. off-state leakage current:	± 50µA
Max. on-state resistance:	25Ω
Max. on-state current:	± 50mA

LED indicators
Green: power indication
Yellow: four: on when output active
Red: LFD indication + faulty channel's yellow LED flashes

Maximum current consumption
40mA at 24V (with all output channels energised)

Power dissipation within unit
0.96W at 24V, with 10mA loads

Safety description (each channel)
U_o=10.5V I_o=14mA P_o=37mW U_m = 253V rms or dc

MTL4510B

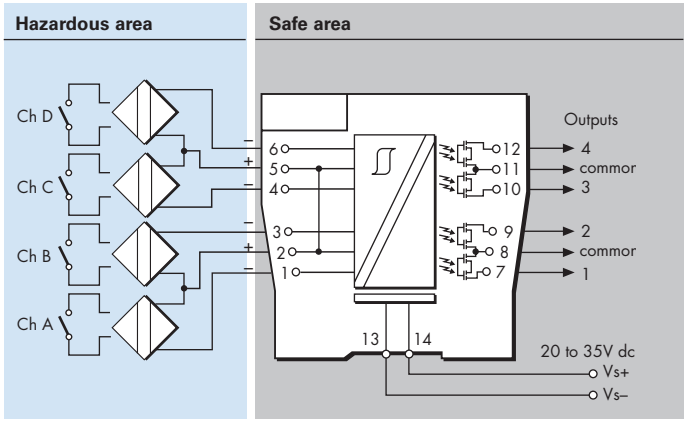

MTL5510B

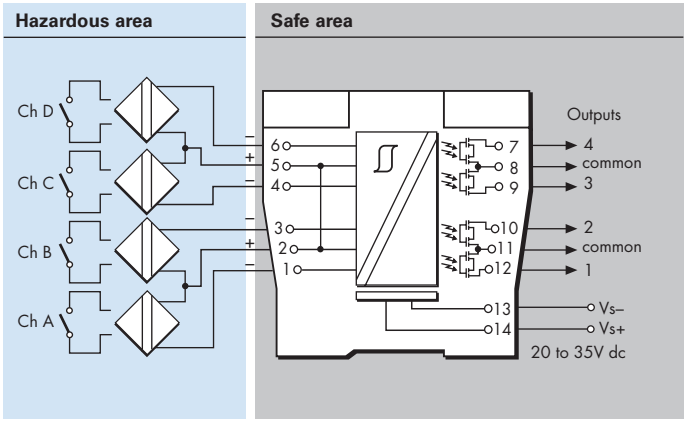

Table 1 - Mode options

MODE	Function	Equivalent*
0	4-ch switch input,	MTLx510
1	2-ch each channel one input, two outputs	MTL4016
2	As mode 1 but with phase reversed on all outputs	MTL4016
3	2-ch, 2-pole changeover output	
4	1-ch with line fault output	MTLx014
5	As mode 4 with changeover outputs	
6	1-ch with start-stop latch	MTL2210B
7	As mode 2 but with LFD enabled on both inputs	MTL4016
8	4-ch switch input,	MTLx510
9	2-ch with line fault output	MTLx017
10	As mode 9 with LFD changeover	
11	As mode 10 with phase reversed	
12	3-ch with normally-open LFD output	
13	3-ch with normally-closed LFD output	
14	2-ch monostable, pulse stretcher	
15	4-ch switch input	MTLx510

** Note: that terminal connections may not be the same on these models, and x can mean either '4' or '5'.*
See Instruction Manual INM4500 or INM5500 for further mode information.

The given data is only intended as a product description and should not be regarded as a legal warranty of properties or guarantee.
In the interest of further technical developments, we reserve the right to make design changes.

Powering Business Worldwide

Eaton Electric Limited,
Great Marlings, Butterfield, Luton
Beds, LU2 8DL, UK.
Tel: + 44 (0)1582 723633 Fax: + 44 (0)1582 422283
E-mail: mtlenquiry@eaton.com
www.eaton.com

© 2025 Eaton
All Rights Reserved
Publication No.
EPSx510B Rev6 230524

EUROPE (EMEA):
+44 (0)1582 723633 mtlenquiry@eaton.com
THE AMERICAS:
+1 800 835 7075 mtl-us-info@eaton.com
ASIA-PACIFIC:
+65 6 645 9888 sales.mtlsing@eaton.com

MTL4511 – MTL5511 SWITCH/ PROXIMITY DETECTOR INTERFACE

1-channel, with line fault detection

The MTLx511 enables a safe-area load to be controlled by a switch or proximity detector located in a hazardous-area. When selected, open or short circuit conditions in the field wiring are detected by the line-fault-detect (LFD) facility and also indicated on the top of the module. Phase reversal for the channel is selected by a switch on the side of the module and output is provided by changeover relay contacts.

SPECIFICATION

See also common specification

Number of channels
One

Location of switches
Zone 0, IIC, T6 hazardous area
Div. 1, Group A hazardous location

Location of proximity detector
Zone 0, IIC, T4–6 hazardous area if suitably certified
Div. 1, Group A hazardous location

Hazardous-area inputs
Inputs conforming to BS EN60947–5–6:2001 standards for proximity detectors (NAMUR)

Voltage applied to sensor
7 to 9V dc from 1kΩ ±10%

Input/output characteristics
Normal phase
Outputs closed if input > 2.1mA (< 2kΩ in input circuit)
Outputs open if input < 1.2mA (> 10kΩ in input circuit)
Hysteresis: 200µA (650Ω) nominal

Line fault detection (LFD) (when selected)
User-selectable via switches on the side of the unit. A line fault is indicated by an LED. The channel output relay is de-energised if an input line fault is detected.
Open-circuit alarm on if I_{in} < 50µA
Open-circuit alarm off if I_{in} > 250µA
Short-circuit alarm on if R_{in} < 100Ω
Short-circuit alarm off if R_{in} > 360Ω
Note: Resistors must be fitted when using the LFD facility with a contact input
500Ω to 1kΩ in series with switch
20kΩ to 25kΩ in parallel with switch

Safe-area output
Single pole relay with changeover contacts
Note: reactive loads must be adequately suppressed

Relay characteristics

	MTL4511	MTL5511
Response time:	10ms maximum	10ms maximum
Contact rating (Safe Area):	10W, 0.5A, 35V dc	250V ac, 2A, cosØ >0.7, 40V dc, 2A, resistive load
Contact rating (Zone 2):	10W, 0.5A, 35V dc	35V, 2A, 100VA.

MTL4511

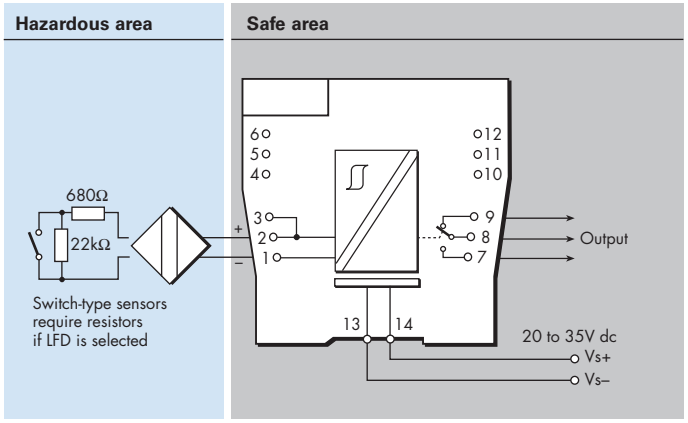

MTL5511

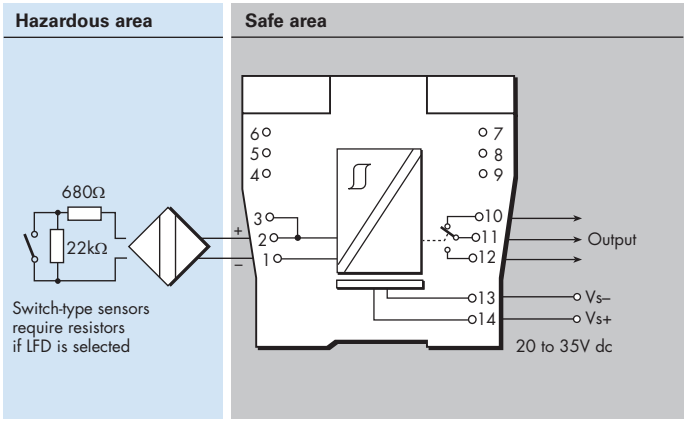

LED indicators
Green: power indication
Yellow: channel status, on when output energised
Red: LFD indication, on when line fault detected

Maximum current consumption
25mA at 24V

Power dissipation within unit
0.6W at 24V

Safety description (each channel)
U_o=10.5V I_o=14mA P_o=37mW U_m = 253V rms or dc

SIL capable
These models have been assessed for use in IEC 61508 functional safety applications.
SIL2 capable for a single device (HFT=0)
SIL3 capable for multiple devices in safety redundant configurations (HFT=1)
See data on MTL web site and refer to the safety manual.

The given data is only intended as a product description and should not be regarded as a legal warranty of properties or guarantee.
In the interest of further technical developments, we reserve the right to make design changes.

Eaton Electric Limited,
Great Marlings, Butterfield, Luton
Beds, LU2 8DL, UK.
Tel: + 44 (0)1582 723633 Fax: + 44 (0)1582 422283
E-mail: mtlenquiry@eaton.com
www.eaton.com

© 2025 Eaton
All Rights Reserved
Publication No.
EPSx511 Rev6 010916

EUROPE (EMEA):
+44 (0)1582 723633 mtlenquiry@eaton.com
THE AMERICAS:
+1 800 835 7075 mtl-us-info@eaton.com
ASIA-PACIFIC:
+65 6 645 9888 sales.mtlsing@eaton.com

MTL4513 – MTL5513 SWITCH/ PROXIMITY DETECTOR INTERFACE

2-channel, line fault detection, phase reversal

The MTLx513 enables two solid-state outputs in the safe area to be controlled by two switches or proximity detectors located in the hazardous area. The Ch1/Ch2 output transistors share a common terminal and can switch +ve or -ve polarity signals. Independent output phase reversal and line fault detection are enabled via switches for each output. LFD indication is provided on the top of the module.

SPECIFICATION

See also common specification

Number of channels
Two

Location of switches
Zone 0, IIC, T6 hazardous area
Div. 1, Group A hazardous location

Location of proximity detectors
Zone 0, IIC, T4–6 hazardous area if suitably certified
Div. 1, Group A hazardous location

Hazardous-area inputs
Inputs conforming to BS EN60947–5–6:2001 standards for proximity detectors (NAMUR)

Voltage applied to sensor
7 to 9V dc from 1kΩ ±10%

Input/output characteristics
Normal phase
Outputs closed if input > 2.1mA (< 2kΩ in input circuit)
Outputs open if input < 1.2mA (> 10kΩ in input circuit)
Hysteresis: 200µA (650Ω) nominal

Line fault detection (LFD) (when selected)
User-selectable for each channel via switches on the side of the unit. Line faults are indicated by an LED for each channel.
Open-circuit alarm on if I_{in} < 50µA
Open-circuit alarm off if I_{in} > 250µA
Short-circuit alarm on if R_{in} < 100Ω
Short-circuit alarm off if R_{in} > 360Ω
Note: Resistors must be fitted when using the LFD facility with a contact input
500Ω to 1kΩ in series with switch
20kΩ to 25kΩ in parallel with switch

Phase reversal
Independent for each channel, user-selectable

Safe-area outputs
Floating solid-state outputs compatible with logic circuits

Operating frequency:	dc to 500Hz
Max. off-state voltage:	± 35V
Max. off-state leakage current:	± 50µA
Max. on-state resistance:	25Ω
Max. on-state current:	± 50mA

MTL4513

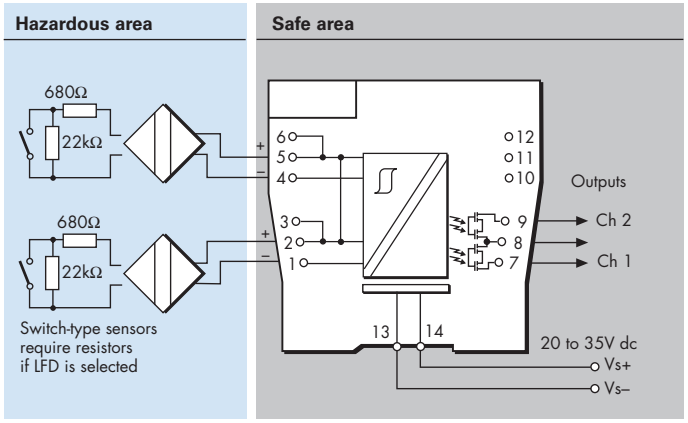

MTL5513

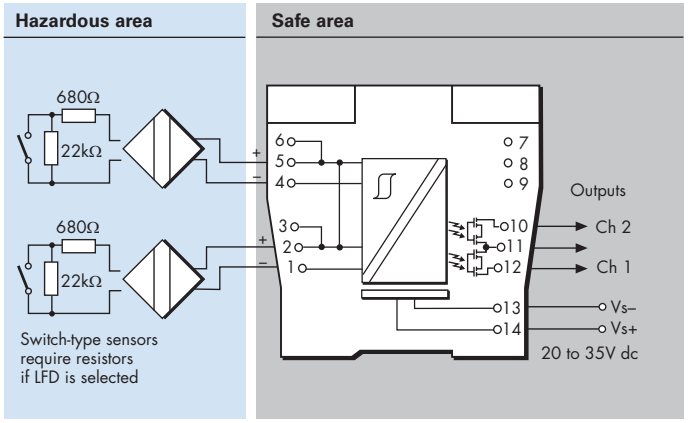

LED indicators
Green: power indication
Yellow: two: channel status, on when output active
Red: two: LFD indication, on when line fault detected

Maximum current consumption
30mA at 24V

Power dissipation within unit
0.65W typical at 24V, with 10mA loads
0.78W max. with 50mA loads

Safety description (each channel)
U_o=10.5V I_o=14mA P_o=37mW U_m = 253V rms or dc

The given data is only intended as a product description and should not be regarded as a legal warranty of properties or guarantee.
In the interest of further technical developments, we reserve the right to make design changes.

Powering Business Worldwide

Eaton Electric Limited,
Great Marlings, Butterfield, Luton
Beds, LU2 8DL, UK.
Tel: + 44 (0)1582 723633 Fax: + 44 (0)1582 422283
E-mail: mtlenquiry@eaton.com
www.eaton.com

© 2025 Eaton
All Rights Reserved
Publication No.
EPSx513 Rev5 010916

EUROPE (EMEA):
+44 (0)1582 723633 mtlenquiry@eaton.com
THE AMERICAS:
+1 800 835 7075 mtl-us-info@eaton.com
ASIA-PACIFIC:
+65 6 645 9888 sales.mtlsing@eaton.com

MTL4514/B – MTL5514 SWITCH/ PROXIMITY DETECTOR INTERFACE

1-channel, line fault detection, phase reversal

The MTLx514 enables a safe–area load to be controlled, through a relay, by a proximity detector or switch located in a hazardous area. Line faults are signalled through a separate relay and indicated on the top of the module. Switches are provided to select phase reversal and to enable the line fault detection.

SPECIFICATION

See also common specification

Number of channels
One

Location of switch
Zone 0, IIC, T6 hazardous area
Div.1, Group A, hazardous location

Location of proximity detector
Zone 0, IIC, T4–6 hazardous area, if suitably certified
Div.1, Group A, hazardous location

Hazardous–area inputs
Inputs conforming to BS EN60947–5–6:2001 standards for proximity detectors (NAMUR)

Voltage applied to sensor
7 to 9V dc from 1kΩ ±10%

Input/output characteristics
Normal phase
Outputs closed if input > 2.1mA (< 2kΩ in input circuit)
Outputs open if input < 1.2mA (> 10kΩ in input circuit)
Hysteresis: 200µA (650Ω) nominal

Line fault detection (LFD) (when selected)
User-selectable via switches on the side of the unit. Line faults are indicated by an LED. Line fault relay is energised and channel output relay de-energised if input line-fault detected
Open-circuit alarm on if I_{in} < 50µA
Open-circuit alarm off if I_{in} > 250µA
Short-circuit alarm on if R_{in} < 100Ω
Short-circuit alarm off if R_{in} > 360Ω
Note: Resistors must be fitted when using the LFD facility with a contact input
500Ω to 1kΩ in series with switch
20kΩ to 25kΩ in parallel with switch

Safe-area output
MTL4514 & MTL5514
Channel: Single pole relay with changeover contacts
LFD: Single pole relay with changeover contacts
MTL4514B
Channel: Single pole relay
LFD: Single pole relay
Note: reactive loads must be adequately suppressed

Relay characteristics

	MTL4514/B	MTL5514
Response time:	10ms maximum	10ms maximum
Contact rating (Safe Area):	10W, 0.5A, 35V dc	250V ac, 2A, cosØ >0.7, 40V dc, 2A, resistive load
Contact rating (Zone 2):	10W, 0.5A, 35V dc	35V, 2A, 100VA.

MTL4514/B

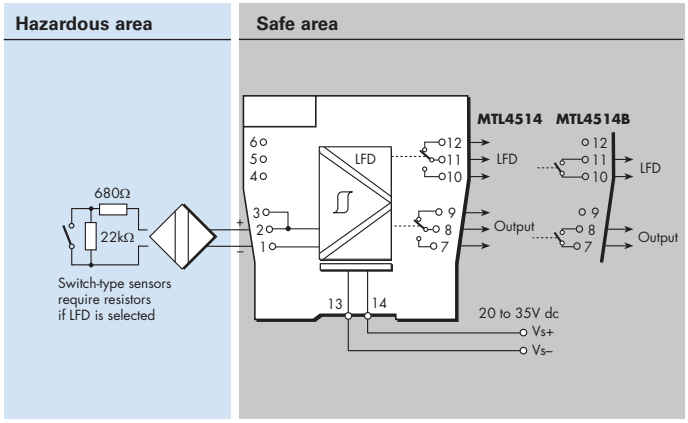

MTL5514

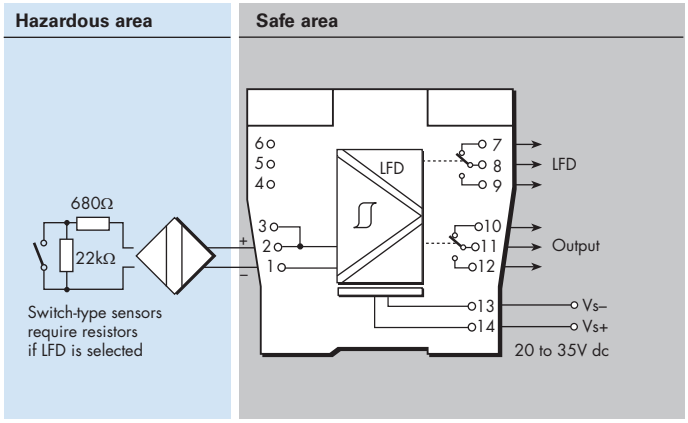

LED indicators
Green: power indication
Yellow: channel status, on when output energised
Red: LFD indication, on when line fault detected

Maximum current consumption
25mA at 24V dc

Power dissipation within unit
0.6W at 24V

Safety description
U_o=10.5V I_o=14mA P_o=37mW U_m = 253V rms or dc

SIL capable
These models have been assessed for use in IEC 61508 functional safety applications.
SIL2 capable for a single device (HFT=0)
SIL3 capable for multiple devices in safety redundant configurations (HFT=1)
See data on MTL web site and refer to the safety manual.

The given data is only intended as a product description and should not be regarded as a legal warranty of properties or guarantee.
In the interest of further technical developments, we reserve the right to make design changes.

Powering Business Worldwide

Eaton Electric Limited,
Great Marlings, Butterfield, Luton
Beds, LU2 8DL, UK.
Tel: + 44 (0)1582 723633 Fax: + 44 (0)1582 422283
E-mail: mtlenquiry@eaton.com
www.eaton.com

© 2025 Eaton
All Rights Reserved
Publication No.
EPSx514 Rev7 010916

EUROPE (EMEA):
+44 (0)1582 723633 mtlenquiry@eaton.com
THE AMERICAS:
+1 800 835 7075 mtl-us-info@eaton.com
ASIA-PACIFIC:
+65 6 645 9888 sales.mtlsing@eaton.com

MTL4514D – MTL5514D SWITCH/ PROXIMITY DETECTOR INTERFACE

1-channel, dual output, LFD, phase reversal

The MTLx514D enables two safe–area loads to be controlled, through relays, by a proximity detector or switch located in a hazardous area. When selected, open or short circuit conditions in the field wiring are detected by the line fault detect (LFD) facility and indicated on the top of the module. Switches are provided to select phase reversal and to enable the line fault detection.

SPECIFICATION

See also common specification

Number of channels
One

Location of switch
Zone 0, IIC, T6 hazardous area
Div.1, Group A, hazardous location

Location of proximity detector
Zone 0, IIC, T4–6 hazardous area, if suitably certified
Div.1, Group A, hazardous location

Hazardous–area inputs
Inputs conforming to BS EN60947–5–6:2001 standards for proximity detectors (NAMUR)

Voltage applied to sensor
7 to 9V dc from 1kΩ ±10%

Input/output characteristics
Normal phase
Outputs closed if input > 2.1mA (< 2kΩ in input circuit)
Outputs open if input < 1.2mA (> 10kΩ in input circuit)
Hysteresis: 200µA (650Ω) nominal

Line fault detection (LFD) (when selected)
User-selectable via switches on the side of the unit. Line faults are indicated by an LED. The channel output relays are de-energised if an input line-fault is detected
Open-circuit alarm on if I_{in} < 50µA
Open-circuit alarm off if I_{in} > 250µA
Short-circuit alarm on if R_{in} < 100Ω
Short-circuit alarm off if R_{in} > 360Ω
Note: Resistors must be fitted when using the LFD facility with a contact input
500Ω to 1kΩ in series with switch
20kΩ to 25kΩ in parallel with switch

Safe-area output
MTL4514D: two, single pole relays with normally-open contacts
MTL5514D: two, single pole relays with changeover contacts
Note: reactive loads must be adequately suppressed

Relay characteristics

	MTL4514D	MTL5514D
Response time:	10ms maximum	10ms maximum
Contact rating (Safe Area):	10W, 0.5A, 35V dc	250V ac, 2A, cosØ >0.7, 40V dc, 2A, resistive load
Contact rating (Zone 2):	10W, 0.5A, 35V dc	35V, 2A, 100VA.

MTL4514D

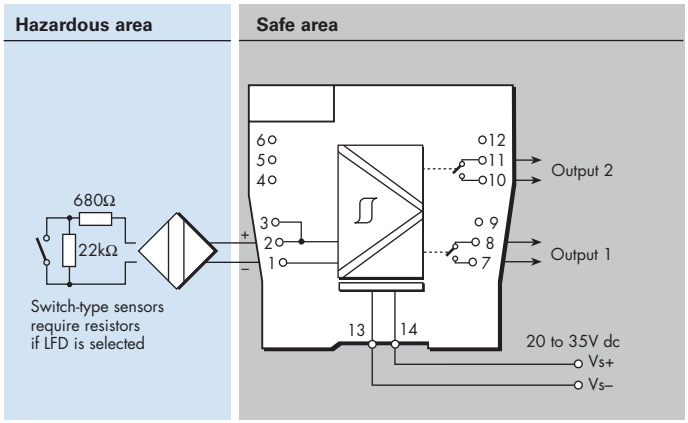

MTL5514D

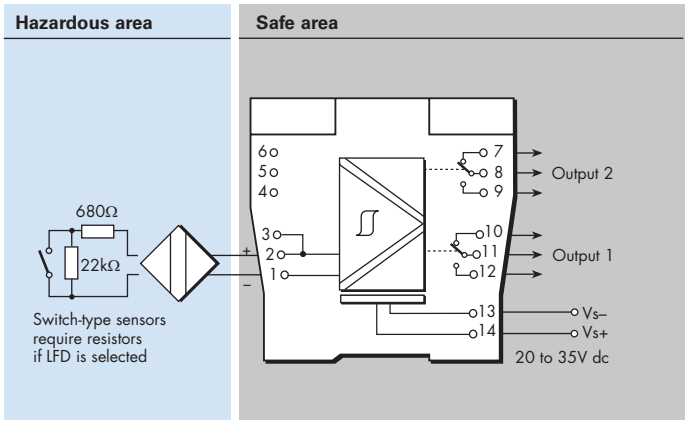

LED indicators
Green: power indication
Yellow: channel status, on when output energised
Red: LFD indication, on when line fault detected

Maximum current consumption
29mA at 24V dc

Power dissipation within unit
0.7W at 24V

Safety description
U_o=10.5V I_o=14mA P_o=37mW U_m = 253V rms or dc

SIL capable
These models have been assessed for use in IEC 61508 functional safety applications.
SIL2 capable for a single device (HFT=0)
SIL3 capable for multiple devices in safety redundant configurations (HFT=1)
See data on MTL web site and refer to the safety manual

The given data is only intended as a product description and should not be regarded as a legal warranty of properties or guarantee.
In the interest of further technical developments, we reserve the right to make design changes.

Eaton Electric Limited,
Great Marlings, Butterfield, Luton
Beds, LU2 8DL, UK.
Tel: + 44 (0)1582 723633 Fax: + 44 (0)1582 422283
E-mail: mtlenquiry@eaton.com
www.eaton.com

© 2025 Eaton
All Rights Reserved
Publication No.
EPSx514D Rev3 010916

EUROPE (EMEA):
+44 (0)1582 723633 mtlenquiry@eaton.com
THE AMERICAS:
+1 800 835 7075 mtl-us-info@eaton.com
ASIA-PACIFIC:
+65 6 645 9888 sales.mtlsing@eaton.com

MTL4514N SWITCH/ PROXIMITY DETECTOR INTERFACE

1-channel, line fault detection, phase reversal

The MTL4514N enables a safe–area load to be controlled, through a relay, by a proximity detector or switch located in a hazardous area. Line faults are signalled through a separate relay and indicated on the top of the module. Switches are provided to select phase reversal and to enable the line fault detection. Resistors, fitted in series with the relay contacts, and when connected in parallel, permit LFD pass-through to the system input.

SPECIFICATION

See also common specification

Number of channels
One

Location of switch
Zone 0, IIC, T6 hazardous area
Div.1, Group A, hazardous location

Location of proximity detector
Zone 0, IIC, T4–6 hazardous area, if suitably certified
Div.1, Group A, hazardous location

Hazardous–area inputs
Inputs conforming to BS EN60947–5–6:2001 standards for proximity detectors (NAMUR)

Voltage applied to sensor
7 to 9V dc from 1kΩ ±10%

Input/output characteristics
Normal phase
Outputs closed if input > 2.1mA (< 2kΩ in input circuit)
Outputs open if input < 1.2mA (> 10kΩ in input circuit)
Hysteresis: 200µA (650Ω) nominal

Line fault detection (LFD) (when selected)
User-selectable via switches on the side of the unit. Line faults are indicated by an LED. Line fault relay is de-energised and channel output relay de-energised if input line-fault detected
Open-circuit alarm on if I_{in} < 50µA
Open-circuit alarm off if I_{in} > 250µA
Short-circuit alarm on if R_{in} < 100Ω
Short-circuit alarm off if R_{in} > 360Ω
Note: Resistors must be fitted when using the LFD facility with a contact input
500Ω to 1kΩ in series with switch
20kΩ to 25kΩ in parallel with switch

Safe-area output
Channel: Single pole relay in series with 2k2Ω resistor
LFD: Single pole relay in series with 15kΩ resistor
Note: reactive loads must be adequately suppressed

MTL4514N

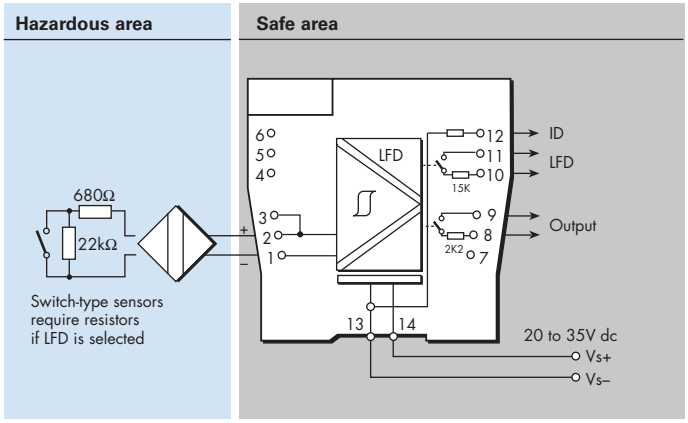

Relay characteristics

	MTL4514N
Response time:	10ms maximum
Contact rating (Safe Area):	10W, 0.5A, 35V dc
Contact rating (Zone 2):	10W, 0.5A, 35V dc

ID Resistor
18kΩ

LED indicators
Green: power indication
Yellow: channel status, on when output energised
Red: LFD indication, on when line fault detected

Maximum current consumption
25mA at 24V dc

Power dissipation within unit
0.6W at 24V

Safety description
U_o=10.5V I_o=14mA P_o=37mW U_m = 253V rms or dc

SIL capable
These models have been assessed for use in IEC 61508 functional safety applications.
SIL2 capable for a single device (HFT=0)
SIL3 capable for multiple devices in safety redundant configurations (HFT=1)
See data on MTL web site and refer to the safety manual.

The given data is only intended as a product description and should not be regarded as a legal warranty of properties or guarantee.
In the interest of further technical developments, we reserve the right to make design changes.

Powering Business Worldwide

Eaton Electric Limited,
Great Marlings, Butterfield, Luton
Beds, LU2 8DL, UK.
Tel: + 44 (0)1582 723633 Fax: + 44 (0)1582 422283
E-mail: mtlenquiry@eaton.com
www.eaton.com

© 2025 Eaton
All Rights Reserved
Publication No.
EPS4514N Rev5 230524

EUROPE (EMEA):
+44 (0)1582 723633 mtlenquiry@eaton.com
THE AMERICAS:
+1 800 835 7075 mtl-us-info@eaton.com
ASIA-PACIFIC:
+65 6 645 9888 sales.mtlsing@eaton.com

MTL4514X SWITCH/ PROXIMITY DETECTOR INTERFACE

1-channel, line fault detection, phase reversal

The MTL4514X enables a safe–area load to be controlled, through a relay, by a proximity detector or switch located in a hazardous area. Line faults are signalled through a separate relay and indicated on the top of the module. Switches are provided to select phase reversal and to enable the line fault detection. Resistors, fitted in series with the relay contacts, and when connected in parallel, permit LFD pass-through to the system input.

SPECIFICATION

See also common specification

Number of channels
One

Location of switch
Zone 0, IIC, T6 hazardous area
Div.1, Group A, hazardous location

Location of proximity detector
Zone 0, IIC, T4–6 hazardous area, if suitably certified
Div.1, Group A, hazardous location

Hazardous–area inputs
Inputs conforming to BS EN60947–5–6:2001 standards for proximity detectors (NAMUR)

Voltage applied to sensor
7 to 9V dc from 1kΩ ±10%

Input/output characteristics
Normal phase
Outputs closed if input > 2.1mA (< 2kΩ in input circuit)
Outputs open if input < 1.2mA (> 10kΩ in input circuit)
Hysteresis: 200µA (650Ω) nominal

Line fault detection (LFD) (when selected)
User-selectable via switches on the side of the unit. Line faults are indicated by an LED. Line fault relay is de-energised and channel output relay de-energised if input line-fault detected
Open-circuit alarm on if I_{in} < 50µA
Open-circuit alarm off if I_{in} > 250µA
Short-circuit alarm on if R_{in} < 100Ω
Short-circuit alarm off if R_{in} > 360Ω
Note: Resistors must be fitted when using the LFD facility with a contact input
500Ω to 1kΩ in series with switch
20kΩ to 25kΩ in parallel with switch

Safe-area output
Channel: Single pole relay in series with 680Ω resistor
LFD: Single pole relay in series with 1k4Ω resistor
Note: reactive loads must be adequately suppressed

MTL4514X

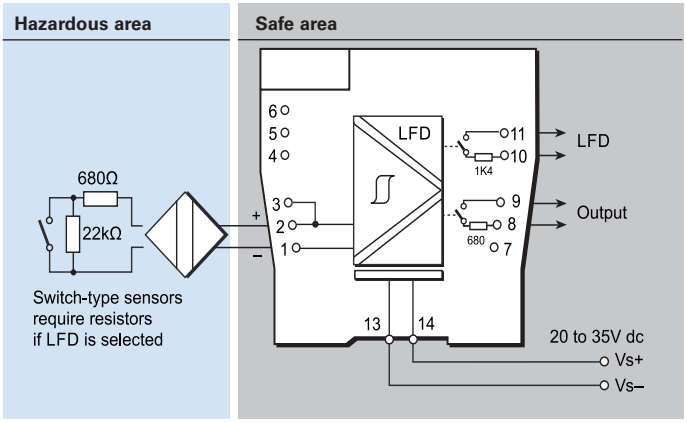

Relay characteristics

	MTL4514X
Response time:	10ms maximum
Contact rating (Safe Area):	10W, 0.5A, 35V dc
Contact rating (Zone 2):	10W, 0.5A, 35V dc

LED indicators
Green: power indication
Yellow: channel status, on when output energised
Red: LFD indication, on when line fault detected

Maximum current consumption
25mA at 24V dc

Power dissipation within unit
0.6W at 24V

Safety description
U_o=10.5V I_o=14mA P_o=37mW U_m = 253V rms or dc

SIL capable
These models have been assessed for use in IEC 61508 functional safety applications.
SIL2 capable for a single device (HFT=0)
SIL3 capable for multiple devices in safety redundant configurations (HFT=1)
See data on MTL web site and refer to the safety manual.

The given data is only intended as a product description and should not be regarded as a legal warranty of properties or guarantee.
In the interest of further technical developments, we reserve the right to make design changes.

Powering Business Worldwide

Eaton Electric Limited,
Great Marlings, Butterfield, Luton
Beds, LU2 8DL, UK.
Tel: + 44 (0)1582 723633 Fax: + 44 (0)1582 422283
E-mail: mtlenquiry@eaton.com
www.eaton.com

© 2025 Eaton
All Rights Reserved
Publication No.
EPS4514X Rev1 231123

EUROPE (EMEA):
+44 (0)1582 723633 mtlenquiry@eaton.com
THE AMERICAS:
+1 800 835 7075 mtl-us-info@eaton.com
ASIA-PACIFIC:
+65 6 645 9888 sales.mtlsing@eaton.com

MTL5514-T SWITCH/ PROXIMITY DETECTOR INTERFACE

1-channel, line fault detection, phase reversal

The MTL5514-T enables a safe–area load to be controlled, through a relay, by a proximity detector or switch located in a hazardous area. Line faults are signalled through a separate relay and indicated on the top of the module. Switches are provided to select phase reversal and to enable the line fault detection.

SPECIFICATION

See also common specification

Number of channels
One

Location of switch
Zone 0, IIC, T6 hazardous area
Div.1, Group A, hazardous location

Location of proximity detector
Zone 0, IIC, T4–6 hazardous area, if suitably certified
Div.1, Group A, hazardous location

Hazardous–area inputs
Inputs conforming to BS EN60947–5–6:2001 standards for proximity detectors (NAMUR)

Voltage applied to sensor
7 to 9V dc from 1kΩ ±10%

Input/output characteristics
Normal phase
Outputs closed if input > 2.1mA (< 2kΩ in input circuit)
Outputs open if input < 1.2mA (> 10kΩ in input circuit)
Hysteresis: 200µA (650Ω) nominal

Line fault detection (LFD) (when selected)
User-selectable via switches on the side of the unit. Line faults are indicated by an LED. Line fault relay is energised and channel output relay de-energised if input line-fault detected
Open-circuit alarm on if I_{in} < 50µA
Open-circuit alarm off if I_{in} > 250µA
Short-circuit alarm on if R_{in} < 100Ω
Short-circuit alarm off if R_{in} > 360Ω
Note: Resistors must be fitted when using the LFD facility with a contact input
500Ω to 1kΩ in series with switch
20kΩ to 25kΩ in parallel with switch

Safe-area output
Channel: Single pole relay with changeover contacts
LFD: Single pole relay with changeover contacts
Note: reactive loads must be adequately suppressed

Relay characteristics

	MTL5514-T
Response time:	10ms maximum
Contact rating (Safe Area):	250V ac, 2A, cosØ >0.7, 40V dc, 2A, resistive load

MTL5514-T

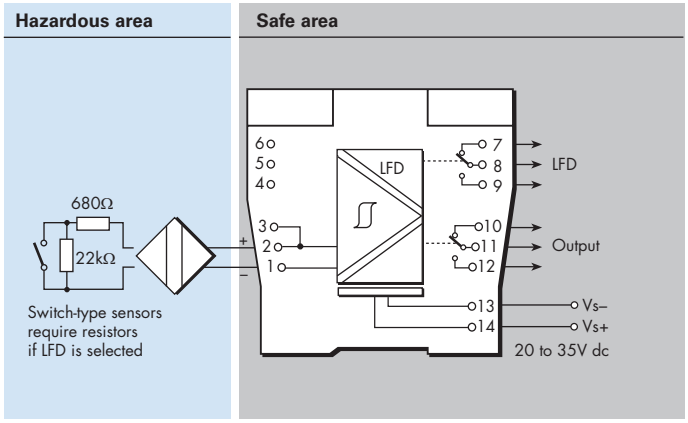

LED indicators
Green: power indication
Yellow: channel status, on when output energised
Red: LFD indication, on when line fault detected

Maximum current consumption
25mA at 24V dc

Power dissipation within unit
0.6W at 24V

Operating temperature range
-20°C to + 65°C (-6 to + 149°F)

Safety description
U_o=10.5V I_o=14mA P_o=37mW U_m = 253V rms or dc

The given data is only intended as a product description and should not be regarded as a legal warranty of properties or guarantee.
In the interest of further technical developments, we reserve the right to make design changes.

Powering Business Worldwide

Eaton Electric Limited,
Great Marlings, Butterfield, Luton
Beds, LU2 8DL, UK.
Tel: + 44 (0)1582 723633 Fax: + 44 (0)1582 422283
E-mail: mtlenquiry@eaton.com
www.eaton.com

© 2025 Eaton
All Rights Reserved
Publication No.
EPS5514-T Rev 1 230118

EUROPE (EMEA):
+44 (0)1582 723633 mtlenquiry@eaton.com
THE AMERICAS:
+1 800 835 7075 mtl-us-info@eaton.com
ASIA-PACIFIC:
+65 6 645 9888 sales.mtlsing@eaton.com

MTL4516/C – MTL5516C SWITCH/ PROXIMITY DETECTOR INTERFACE

2-channel, with line fault detection

The MTLx516/C enable two safe-area loads to be controlled by a switch or proximity detector located in a hazardous-area. When selected, open or short circuit conditions in the field wiring are detected by the line-fault-detect (LFD) facility and also indicated on the top of the module. Phase reversal for each channel is selected by a switch on the side of the module and output is provided by changeover relay contacts.

SPECIFICATION

See also common specification

Number of channels
Two

Location of switches
Zone 0, IIC, T6 hazardous area
Div. 1, Group A hazardous location

Location of proximity detector
Zone 0, IIC, T4–6 hazardous area if suitably certified
Div. 1, Group A hazardous location

Hazardous-area inputs
Inputs conforming to BS EN60947–5–6:2001 standards for proximity detectors (NAMUR)

Voltage applied to sensor
7 to 9V dc from 1kΩ ±10%

Input/output characteristics
Normal phase
Outputs closed if input > 2.1mA (< 2kΩ in input circuit)
Outputs open if input < 1.2mA (> 10kΩ in input circuit)
Hysteresis: 200µA (650Ω) nominal

Line fault detection (LFD) (when selected)
User-selectable via switches on the side of the unit. Line faults are indicated by an LED for each channel. The channel output relay is de-energised if an input line fault is detected.
Open-circuit alarm on if I_{in} < 50µA
Open-circuit alarm off if I_{in} > 250µA
Short-circuit alarm on if R_{in} < 100Ω
Short-circuit alarm off if R_{in} > 360Ω
Note: Resistors must be fitted when using the LFD facility with a contact input
500Ω to 1kΩ in series with switch
20kΩ to 25kΩ in parallel with switch

Safe-area output
Two single-pole relays with changeover contacts
Note: reactive loads must be adequately suppressed

Relay characteristics

	MTL4516/C	MTL5516C
Response time:	10ms maximum	10ms maximum
Contact rating (Safe Area):	10W, 0.5A, 35V dc	250V ac, 2A, cosØ >0.7, 40V dc, 2A, resistive load
Contact rating (Zone 2):	10W, 0.5A, 35V dc	35V, 2A, 100VA.

Maximum current consumption
35mA at 24V

Power dissipation within unit
0.84W at 24V

MTL4516

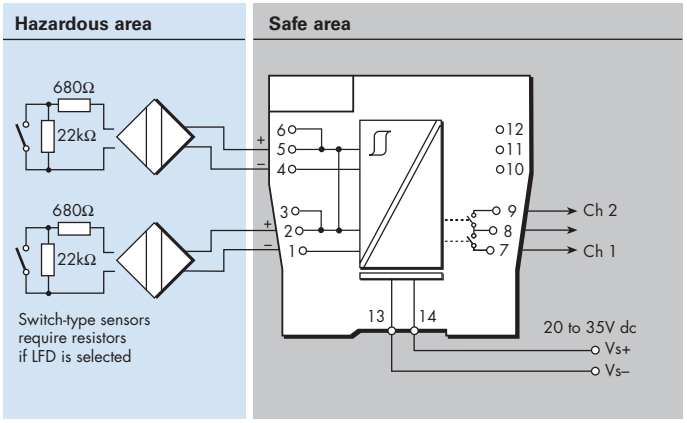

MTL4516C

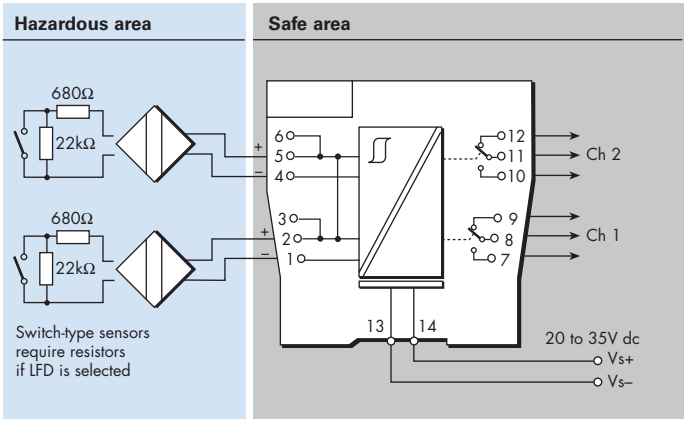

MTL5516C

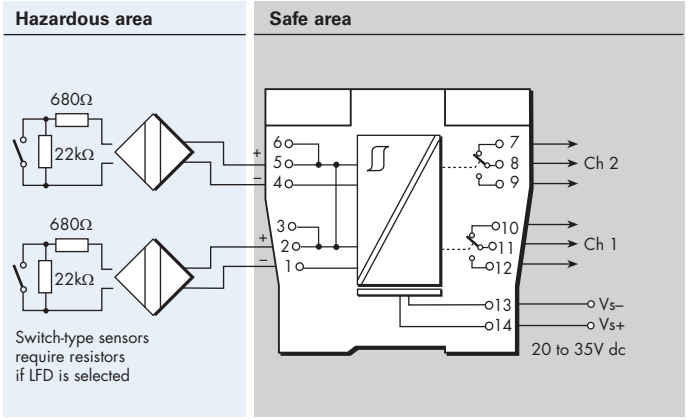

LED indicators
Green: power indication
Yellow: two: channel status, on when output energised
Red: two: LFD indication, on when line fault detected

Safety description (each channel)
U_o=10.5V I_o=14mA P_o=37mW U_m = 253V rms or dc

SIL capable
These models have been assessed for use in IEC 61508 functional safety applications.
SIL2 capable for a single device (HFT=0)
SIL3 capable for multiple devices in safety redundant configurations (HFT=1)
See data on MTL web site and refer to the safety manual

The given data is only intended as a product description and should not be regarded as a legal warranty of properties or guarantee.
In the interest of further technical developments, we reserve the right to make design changes.

Powering Business Worldwide

Eaton Electric Limited,
Great Marlings, Butterfield, Luton
Beds, LU2 8DL, UK.
Tel: + 44 (0)1582 723633 Fax: + 44 (0)1582 422283
E-mail: mtlenquiry@eaton.com
www.eaton.com

© 2025 Eaton
All Rights Reserved
Publication No.
EPSx516/C Rev6 010916

EUROPE (EMEA):
+44 (0)1582 723633 mtlenquiry@eaton.com
THE AMERICAS:
+1 800 835 7075 mtl-us-info@eaton.com
ASIA-PACIFIC:
+65 6 645 9888 sales.mtlsing@eaton.com

MTL4517 – MTL5517 SWITCH/ PROXIMITY DETECTOR INTERFACE

2-channel, line fault detection, phase reversal

The MTLx517 enables two safe-area loads to be controlled, through a relay, by proximity detectors or switches located in a hazardous area. Line faults are signalled through a separate relay and indicated on the top of the module. Switches are provided to select phase reversal and to enable the line fault detection.

SPECIFICATION

See also common specification

Number of channels
Two

Location of switch
Zone 0, IIC, T6 hazardous area
Div.1, Group A, hazardous location

Location of proximity detector
Zone 0, IIC, T4–6 hazardous area, if suitably certified
Div.1, Group A, hazardous location

Hazardous-area inputs
Inputs conforming to BS EN60947–5–6:2001 standards for proximity detectors (NAMUR)

Voltage applied to sensor
7 to 9V dc from 1kΩ ±10%

Input/output characteristics
Normal phase
Outputs closed if input > 2.1mA (< 2kΩ in input circuit)
Outputs open if input < 1.2mA (> 10kΩ in input circuit)
Hysteresis: 200µA (650Ω) nominal

Line fault detection (LFD) (when selected)
User selectable by switches on the side of the module.
Line faults are indicated by the LED for each channel.
Line fault relay is energised and channel output relay de-energised if input line-fault detected
Open-circuit alarm on if I_{in} < 50µA
Open-circuit alarm off if I_{in} > 250µA
Short-circuit alarm on if R_{in} < 100Ω
Short-circuit alarm off if R_{in} > 360Ω
Note: Resistors must be fitted when using the LFD facility with a contact input
500Ω to 1kΩ in series with switch
20kΩ to 25kΩ in parallel with switch

Safe-area output
Channel: Two single-pole relays with normally open contacts
LFD: Single pole relay with changeover contact (MTL4517)
Single pole relay with normally open contact (MTL5517)
Note: reactive loads must be adequately suppressed

Relay characteristics

	MTL4517	MTL5517
Response time:	10ms maximum	10ms maximum
Contact rating (Safe Area):	10W, 0.5A, 35V dc	250V ac, 2A, cosØ >0.7, 40V dc, 2A, resistive load
Contact rating (Zone 2):	10W, 0.5A, 35V dc	35V, 2A, 100VA.

MTL4517

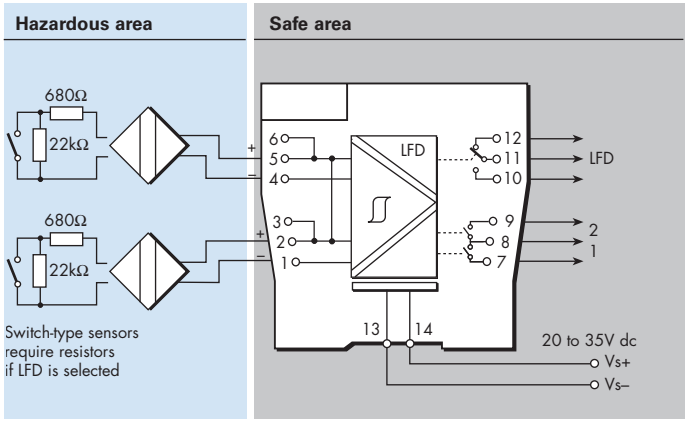

MTL5517

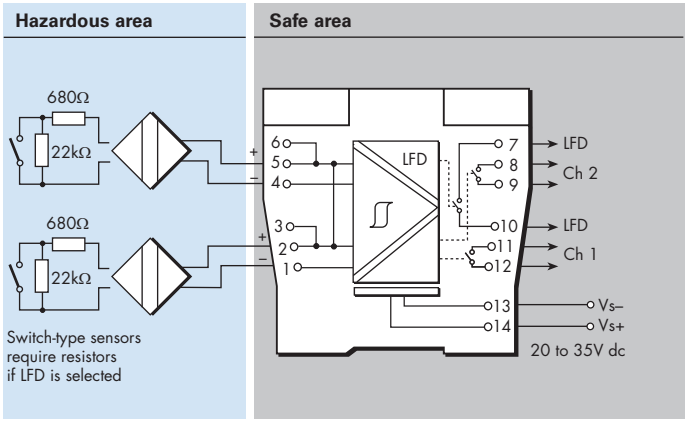

Maximum current consumption
35mA at 24V

Power dissipation within unit
0.84W at 24V

LED indicators
Green: power indication
Yellow: two: channel status, on when output energised
Red: two: LFD indication, on when line fault detected

Safety description (each channel)
U_o=10.5V I_o=14mA P_o=37mW U_m = 253V rms or dc

SIL capable
These models have been assessed for use in IEC 61508 functional safety applications.
SIL2 capable for a single device (HFT=0)
SIL3 capable for multiple devices in safety redundant configurations (HFT=1)
See data on MTL web site and refer to the safety manual.

The given data is only intended as a product description and should not be regarded as a legal warranty of properties or guarantee.
In the interest of further technical developments, we reserve the right to make design changes.

Eaton Electric Limited,
Great Marlings, Butterfield, Luton
Beds, LU2 8DL, UK.
Tel: + 44 (0)1582 723633 Fax: + 44 (0)1582 422283
E-mail: mtlenquiry@eaton.com
www.eaton.com

© 2025 Eaton
All Rights Reserved
Publication No.
EPSx517 Rev6 010916

EUROPE (EMEA):
+44 (0)1582 723633 mtlenquiry@eaton.com
THE AMERICAS:
+1 800 835 7075 mtl-us-info@eaton.com
ASIA-PACIFIC:
+65 6 645 9888 sales.mtlsing@eaton.com

MTL4521/L – MTL5521 SOLENOID/ ALARM DRIVER

loop-powered, IIC

The MTLx521 and the MTL4521L are loop-powered modules which enable a device located in the hazardous area to be controlled from the safe area. They can all drive a certified intrinsically safe low-power load, as well as non-energy-storing simple apparatus such as an LED.

SPECIFICATION

See also common specification

Number of channels
One

Location of load
Zone 0, IIC, T4–6 hazardous area if suitably certified
Div. 1, Group A hazardous location

Minimum output voltage (MTLx521)

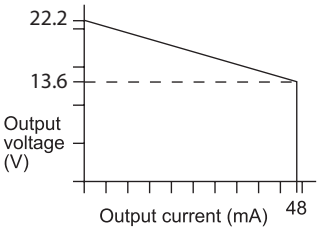

Equivalent output circuit

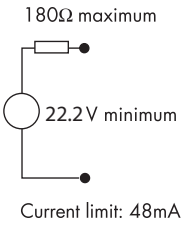

Minimum output voltage (MTL4521L)

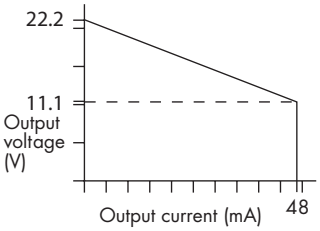

Equivalent output circuit

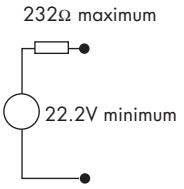

Input voltage
20 to 35V dc

Hazardous-area output (MTLx521)
Minimum output voltage: 13.6V at 48mA
Maximum output voltage: 24V from 180Ω
Current limit: 48mA minimum

Hazardous-area output (MTL4521L)
Minimum output voltage: 11.1V at 48mA
Maximum output voltage: 24V from 232Ω
Current limit: 48mA minimum

Output ripple
< 0.5% of maximum output, peak to peak

Response time
Output within 10% of final value within 100ms

MTL4521 / MTL4521L

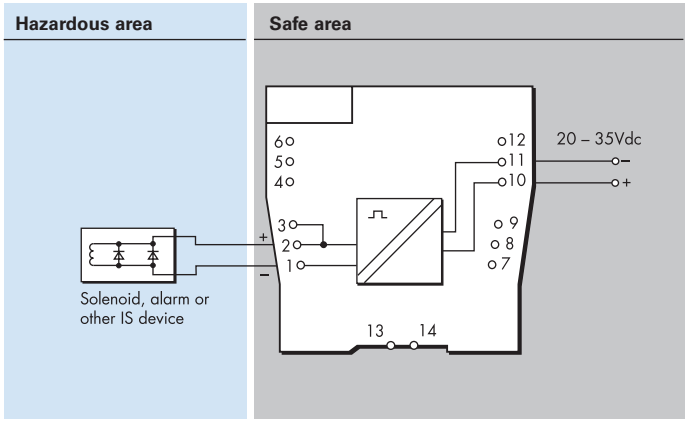

MTL5521

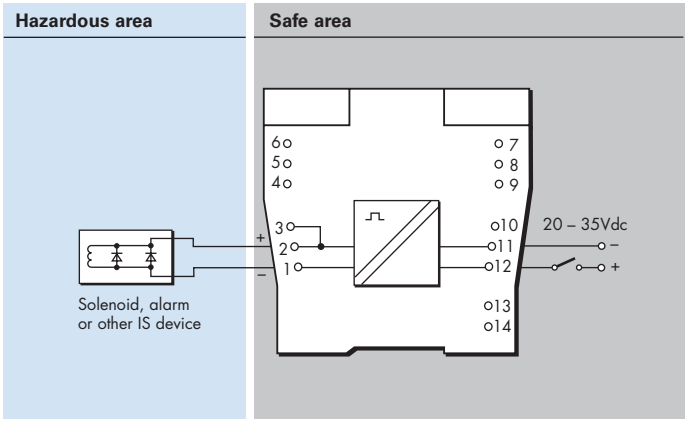

LED indicator
Yellow: output status, on when output active

Maximum current consumption
90mA at 24V

Power dissipation within unit
1.4W at 24V

Safety description (MTLx521)
U_o=25V I_o=147mA P_o=0.92W U_m = 253V rms or dc

Safety description (MTL4521L)
U_o= 25V I_o= 108mA P_o= 0.68W U_m = 253V rms or dc

SIL capable
These models have been assessed for use in IEC 61508 functional safety applications.
SIL3 capable for a single device (HFT=0) when the required function is to de-energise the output.
SIL1 capable for a single device (HFT=0) when the required function is to energise the output.
See data on MTL web site and refer to the safety manual.

The given data is only intended as a product description and should not be regarded as a legal warranty of properties or guarantee.
In the interest of further technical developments, we reserve the right to make design changes.

Eaton Electric Limited,
Great Marlings, Butterfield, Luton
Beds, LU2 8DL, UK.
Tel: + 44 (0)1582 723633 Fax: + 44 (0)1582 422283
E-mail: mtlenquiry@eaton.com
www.eaton.com

© 2025 Eaton
All Rights Reserved
Publication No.
EPSx521 Rev8 040517

EUROPE (EMEA):
+44 (0)1582 723633 mtlenquiry@eaton.com
THE AMERICAS:
+1 800 835 7075 mtl-us-info@eaton.com
ASIA-PACIFIC:
+65 6 645 9888 sales.mtlsing@eaton.com

MTL5521-T
SOLENOID/ ALARM DRIVER
loop-powered, IIC

The MTL5521 is aloop-powered module which enables a device located in the hazardous area to be controlled from the safe area. That can drive a certified intrinsically safe low-power load, as well as non-energy-storing simple apparatus such as an LED.

SPECIFICATION

See also common specification

Number of channels
One

Location of load
Zone 0, IIC, T4–6 hazardous area if suitably certified
Div. 1, Group A hazardous location

Minimum output voltage (MTL5521)

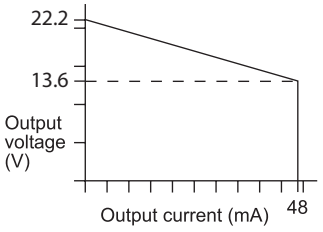

Equivalent output circuit

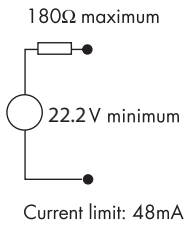

Input voltage
20 to 35V dc

Hazardous-area output

Minimum output voltage:	13.6V at 48mA
Maximum output voltage:	24V from 180Ω
Current limit:	48mA minimum

Output ripple
< 0.5% of maximum output, peak to peak

Response time
Output within 10% of final value within 100ms

MTL5521

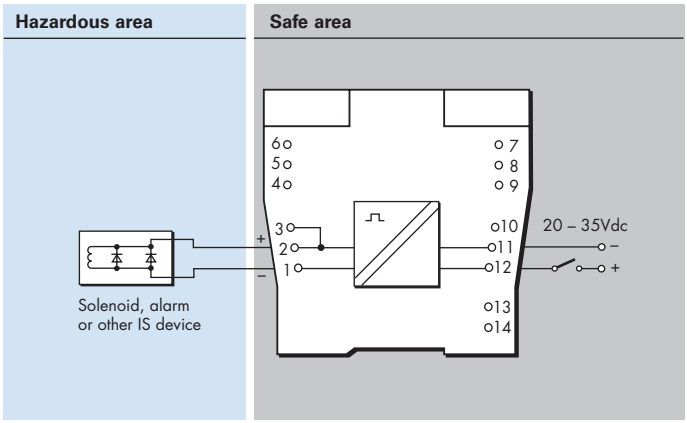

LED indicator
Yellow: output status, on when output active

Maximum current consumption
90mA at 24V

Power dissipation within unit
1.4W at 24V

Operating temperature range
-20°C to + 65°C (-6 to + 149°F)

Safety description (MTLx521)
U_o=25V I_o=147mA P_o=0.92W U_m = 253V rms or dc

The given data is only intended as a product description and should not be regarded as a legal warranty of properties or guarantee.
In the interest of further technical developments, we reserve the right to make design changes.

Powering Business Worldwide

Eaton Electric Limited,
Great Marlings, Butterfield, Luton
Beds, LU2 8DL, UK.
Tel: + 44 (0)1582 723633 Fax: + 44 (0)1582 422283
E-mail: mtlenquiry@eaton.com
www.eaton.com

© 2025 Eaton
All Rights Reserved
Publication No.
EPS5521-T Rev1 230118

EUROPE (EMEA):
+44 (0)1582 723633 mtlenquiry@eaton.com
THE AMERICAS:
+1 800 835 7075 mtl-us-info@eaton.com
ASIA-PACIFIC:
+65 6 645 9888 sales.mtlsing@eaton.com

MTL5522
SOLENOID/ALARM DRIVER
loop-powered, IIB

The MTL5522 is a loop-powered module which enables a device located in the hazardous area to be controlled from the safe area. The MTL5522 can drive a certified intrinsically safe low-power load, as well as non-energy-storing simple apparatus such as an LED. The unit's input/output isolation allows the control switch to be connected into either side of the 24V dc supply circuit.

SPECIFICATION

See also common specification

Number of channels
One

Location of load
Zone 0, IIB, T4–6 hazardous area if suitably certified
Div. 1, Group C hazardous location

Minimum output voltage

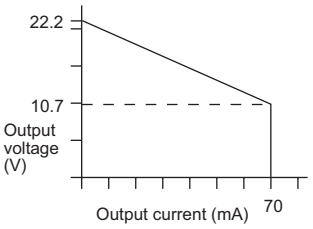

Equivalent output circuit

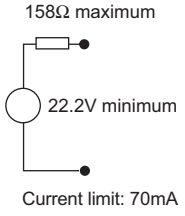

Input voltage
20 to 35V dc

Hazardous-area output

Minimum output voltage:	10.7V at 70mA
Maximum output voltage:	24V from 158Ω
Current limit:	70mA minimum

Output ripple
< 0.5% of maximum output, peak to peak

Response time
Output within 10% of final value within 100ms

MTL5522

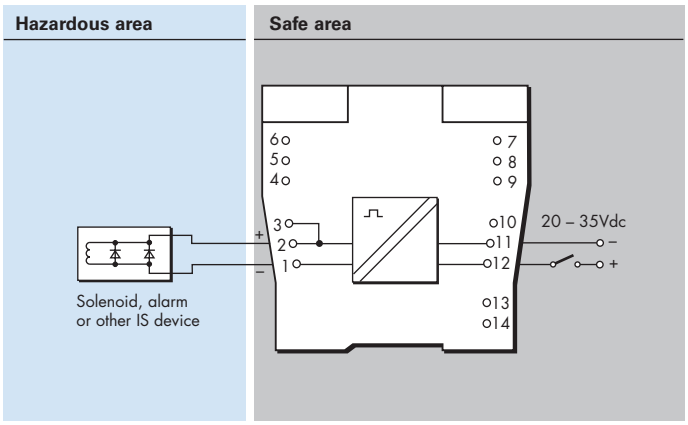

LED indicator
Yellow: output status, on when output active

Maximum current consumption
125mA (typ.) at 24V

Power dissipation within unit
1.4W at 24V

Safety description
U_o=25V I_o=166mA P_o=1.04W U_m = 253V rms or dc

SIL capable
These models have been assessed for use in
IEC 61508 functional safety applications.
SIL3 capable for a single device (HFT=0) when the required function is to de-energise the output.
SIL1 capable for a single device (HFT=0) when the required function is to energise the output.
See data on MTL web site and refer to the safety manual.

The given data is only intended as a product description and should not be regarded as a legal warranty of properties or guarantee.
In the interest of further technical developments, we reserve the right to make design changes.

Eaton Electric Limited,
Great Marlings, Butterfield, Luton
Beds, LU2 8DL, UK.
Tel: + 44 (0)1582 723633 Fax: + 44 (0)1582 422283
E-mail: mtlenquiry@eaton.com
www.eaton.com

© 2025 Eaton
All Rights Reserved
Publication No.
EPSx522 Rev8 040517

EUROPE (EMEA):
+44 (0)1582 723633 mtlenquiry@eaton.com
THE AMERICAS:
+1 800 835 7075 mtl-us-info@eaton.com
ASIA-PACIFIC:
+65 6 645 9888 sales.mtlsing@eaton.com

MTL4523/R – MTL5523 SOLENOID/ALARM DRIVER

with line fault detection, IIC

With the MTLx523 interface, an on/off device in a hazardous area can be controlled by a volt-free contact or logic signal in the safe area. It is suitable for driving loads such as solenoids. Line fault detection (LFD), which operates irrespective of the output state, is signalled by a safe-area solid-state switch which de-energises MTLx523, or energises MTL4523R, if a field line is open or short–circuited. Earth fault detection can be provided by connecting an earth leakage detector to terminal 3.

SPECIFICATION

See also common specification

Number of channels

One

Location of load

Zone 0, IIC, T4–6 hazardous area if suitably certified
Div. 1, Group A, hazardous location

Minimum output voltage

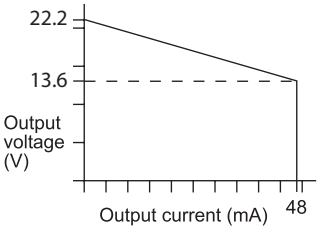

Equivalent output circuit

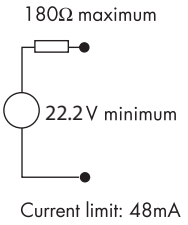

Hazardous-area output

Minimum output voltage:	13.6V at 48mA
Maximum output voltage:	24V from 180Ω
Maximum off-state output voltage:	4V from 180Ω
Current limit:	48mA minimum

Output ripple

< 0.5% of maximum output, peak to peak

Control input

Suitable for switch contacts, an open collector transistor or logic drive.
(Internal contact wetting voltage 12V @ 0.2mA contact closed.
Not suitable for voltage control via series diode.)
Output turns on if input switch closed, transistor on or
< 1.4V applied across control input
Output turns off if input switch open, transistor off or
> 4.5V applied across control input

Response time

Output within 10% of final value within 100ms

Line fault detection (LFD)

Open or short circuit in field cabling de-energises* solid state line-fault signal.
LFD transistor is switched on*, provided that the field circuit impedance is > 55Ω and < 4kΩ.

* These conditions are reversed for the MTL4523R. This is to permit parallel connection of alarms between modules to provide a group alarm output.

MTL4523 / MTL4523R

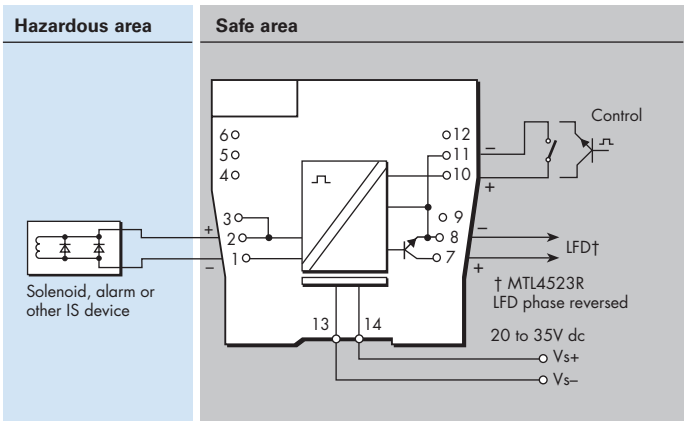

MTL5523

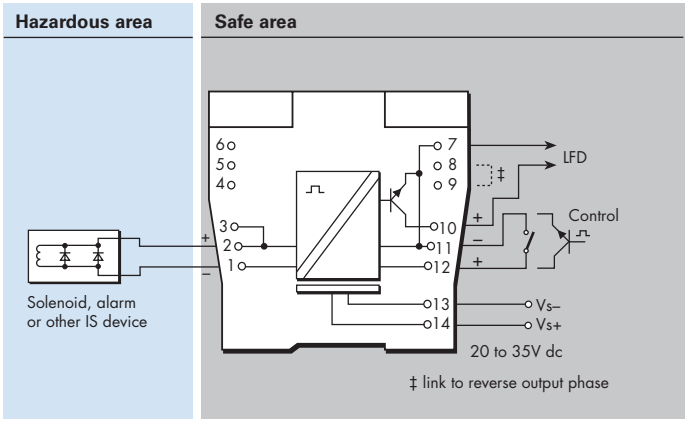

Line fault signal characteristics

Maximum off-state voltage:	35V
Maximum off-state leakage current:	10µA
Maximum on-state voltage drop:	2V
Maximum on-state current:	50mA

LED indicators

Green: power indication
Yellow: output status, on when output active
Red: LFD indication, on when line fault detected

Maximum current consumption

100mA at 24V dc

Power dissipation within unit

1.2W with typical solenoid valve, output on
2.0W worst case

Safety description

U_o=25V I_o=147mA P_o= 0.92W U_m = 253V rms or dc

SIL capable

These models have been assessed for use in IEC 61508 functional safety applications.
SIL2 capable for a single device (HFT=0)
SIL3 capable for multiple devices in safety redundant configurations (HFT=1)
See data on MTL web site and refer to the safety manual.

The given data is only intended as a product description and should not be regarded as a legal warranty of properties or guarantee.
In the interest of further technical developments, we reserve the right to make design changes.

Powering Business Worldwide

Eaton Electric Limited,
Great Marlings, Butterfield, Luton
Beds, LU2 8DL, UK.
Tel: + 44 (0)1582 723633 Fax: + 44 (0)1582 422283
E-mail: mtlenquiry@eaton.com
www.eaton.com

© 2025 Eaton
All Rights Reserved
Publication No.
EPSx523/R Rev10 230524

EUROPE (EMEA):
+44 (0)1582 723633 mtlenquiry@eaton.com
THE AMERICAS:
+1 800 835 7075 mtl-us-info@eaton.com
ASIA-PACIFIC:
+65 6 645 9888 sales.mtlsing@eaton.com

MTL4523L
SOLENOID/ ALARM DRIVER
loop-powered with line fault detection, IIC

With the MTL4523L interface, an on/off device in a hazardous area can be controlled by a voltage signal in the safe area. It is suitable for driving loads such as solenoids. Line fault detection (LFD), which operates when the output is energised, is signalled by a safe-area solid-state switch which energises if a field line is open or short-circuited.

SPECIFICATION

See also common specification

Number of channels
One

Location of load
Zone 0, IIC, T4–6 hazardous area if suitably certified
Div. 1, Group A, hazardous location

Minimum output voltage **Equivalent output circuit**

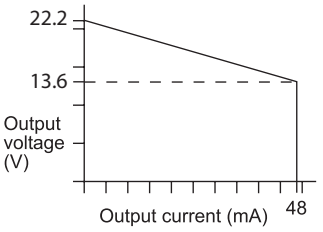

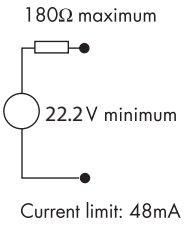

Input voltage
20 to 35V dc

Hazardous-area output

Minimum output voltage:	13.6V at 48mA
Maximum output voltage:	24V from 180Ω
Current limit:	48mA minimum

Output ripple
< 0.5% of maximum output, peak to peak

Response time
Output within 10% of final value within 100ms

Line fault detection (LFD)
Open or short circuit in field cabling energises solid state line fault signal
LFD transistor is switched off, provided that the field circuit impedance is > 55Ω and < 4kΩ.

Line fault signal characteristics

Maximum off-state voltage:	35V
Maximum off-state leakage current:	10µA
Maximum on-state voltage drop:	2V
Maximum on-state current:	50mA

Note: LFD signal is Zener-diode protected against inductive loads

LED indicators
Yellow: output status, on when output active

MTL4523L

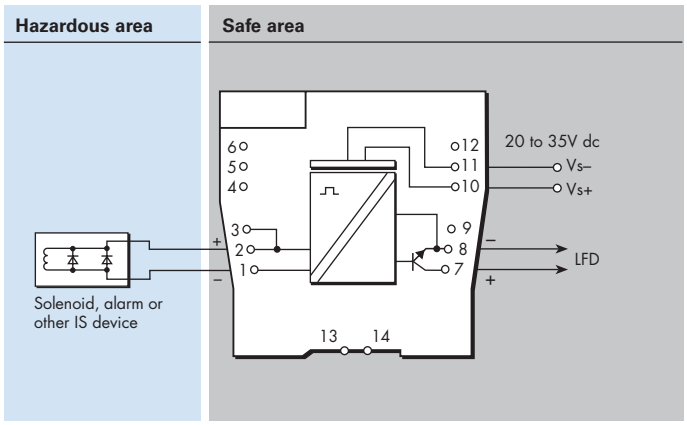

Red: LFD indication, on when line fault detected

Maximum current consumption
100mA at 24V dc

Power dissipation within unit
1.2W with typical solenoid valve, output on

Safety description
U_o=25V I_o=147mA P_o= 0.92W U_m = 253V rms or dc

SIL capable
These models have been assessed for use in IEC 61508 functional safety applications.
SIL3 capable for a single device (HFT=0) when the required function is to de-energise the output.
SIL1 capable for a single device (HFT=0) when the required function is to energise the output.
See data on MTL web site and refer to the safety manual.

The given data is only intended as a product description and should not be regarded as a legal warranty of properties or guarantee.
In the interest of further technical developments, we reserve the right to make design changes.

Powering Business Worldwide

Eaton Electric Limited,
Great Marlings, Butterfield, Luton
Beds, LU2 8DL, UK.
Tel: + 44 (0)1582 723633 Fax: + 44 (0)1582 422283
E-mail: mtlenquiry@eaton.com
www.eaton.com

© 2025 Eaton
All Rights Reserved
Publication No.
EPS4523L Rev11 220319

EUROPE (EMEA):
+44 (0)1582 723633 mtlenquiry@eaton.com
THE AMERICAS:
+1 800 835 7075 mtl-us-info@eaton.com
ASIA-PACIFIC:
+65 6 645 9888 sales.mtlsing@eaton.com

MTL4523V/VL – MTL5523V/VL SOLENOID/ALARM DRIVER

with line fault detection, IIC

With the MTLx523V/VL interface, an on/off device in a hazardous area can be controlled by a voltage signal in the safe area. It is suitable for driving loads such as solenoids. Line fault detection (LFD), which operates irrespective of the output state, is signalled by a safe-area solid-state switch which energises if a field line is open or short–circuited. Earth fault detection can be provided by connecting an earth leakage detector to terminal 3.

SPECIFICATION

See also common specification

Number of channels
One

Location of load
Zone 0, IIC, T4–6 hazardous area if suitably certified
Div. 1, Group A, hazardous location

Minimum output voltage (MTLx523V)

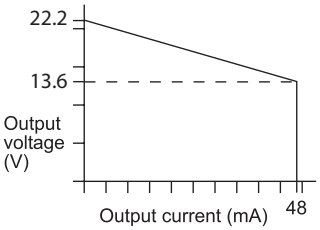

Equivalent output circuit

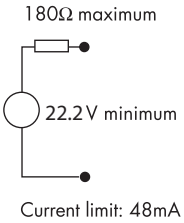

Minimum output voltage (MTLx523VL)

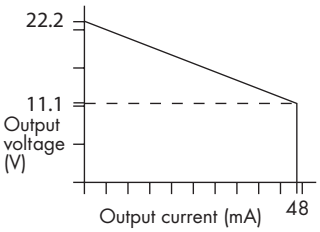

Equivalent output circuit

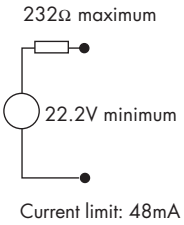

Hazardous-area output (MTLx523V)

Minimum output voltage:	13.6V at 48mA
Maximum output voltage:	24V from 180Ω
Maximum off-state output voltage:	4V from 180Ω
Current limit:	48mA minimum

Hazardous-area output (MTLx523VL)

Minimum output voltage:	11.1V at 48mA
Maximum output voltage:	24V from 232Ω
Maximum off-state output voltage:	4V from 232Ω
Current limit:	48mA minimum

Output ripple
< 0.5% of maximum output, peak to peak

Control input
Suitable for 24V logic drive
Output turns on if > 18V applied across control input
Output turns off if < 5V applied across control input
Maximum control input voltage: 28V
Maximum control system output leakage current: 0.5mA

Response time
Output within 10% of final value within 100ms

MTL4523V/MTL4523VL

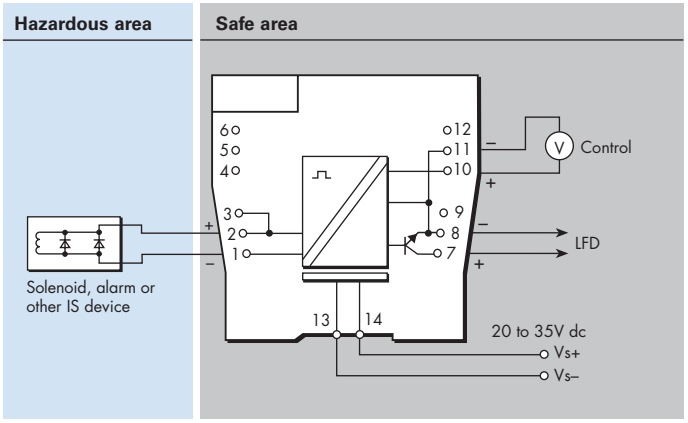

MTL5523V/MTL5523VL

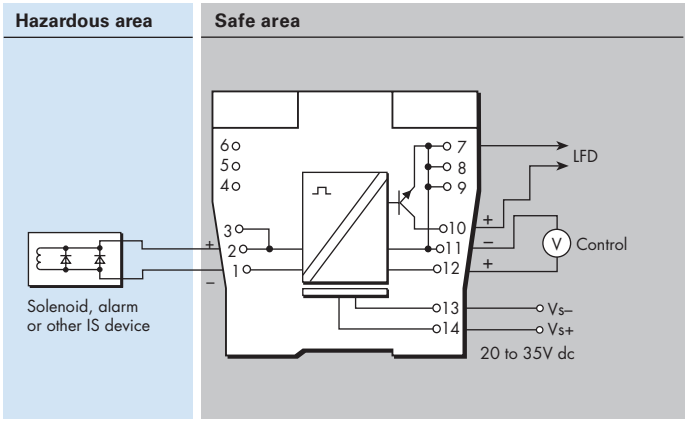

Line fault detection (LFD)
Open or short circuit in field cabling energises solid state line-fault signal.
LFD transistor is switched off, provided that the field circuit impedance is > 55Ω and < 4kΩ.

Line fault signal characteristics

Maximum off-state voltage:	35V
Maximum off-state leakage current:	10µA
Maximum on-state voltage drop:	2V
Maximum on-state current:	50mA

LED indicators
Green: power indication
Yellow: output status, on when output active
Red: LFD indication, on when line fault detected

Maximum current consumption
100mA at 24V dc

Power dissipation within unit
1.2W with typical solenoid valve, output on
2.0W worst case

Safety description (MTLx523V)
V_o=25V I_o=147mA P_o= 0.92W U_m = 253V rms or dc

Safety description (MTLx523VL)
V_o=25V I_o=108mA P_o= 0.68W U_m = 253V rms or dc

SIL capable
These models have been assessed for use in IEC 61508 functional safety applications.
SIL2 capable for a single device (HFT=0)
SIL3 capable for multiple devices in safety redundant configurations (HFT=1)
See data on MTL web site and refer to the safety manual.

The given data is only intended as a product description and should not be regarded as a legal warranty of properties or guarantee.
In the interest of further technical developments, we reserve the right to make design changes.

Eaton Electric Limited,
Great Marlings, Butterfield, Luton
Beds, LU2 8DL, UK.
Tel: + 44 (0)1582 723633 Fax: + 44 (0)1582 422283
E-mail: mtlenquiry@eaton.com
www.eaton.com

© 2025 Eaton
All Rights Reserved
Publication No.
EPSx523V-VL Rev7 230524

EUROPE (EMEA):
+44 (0)1582 723633 mtlenquiry@eaton.com
THE AMERICAS:
+1 800 835 7075 mtl-us-info@eaton.com
ASIA-PACIFIC:
+65 6 645 9888 sales.mtlsing@eaton.com

MTL4524 – MTL5524 SOLENOID/ALARM DRIVER

switch operated with override, IIC

The MTLx524 enables an on/off device in a hazardous area to be controlled by a volt-free contact or logic signal in the safe area. It can drive loads such as solenoids, alarms, LEDs and other low power devices that are certified as intrinsically safe or are classified as non-energy storing simple apparatus.

The MTL4524 allows a second safe-area switch or logic signal to be connected enabling the output to be disabled to permit, for example, a safety system to override a control signal.

The MTL5524 has its phase reversed by connecting a wire link between pins 8 and 9.

SPECIFICATION

See also common specification

Number of channels
One

Location of load
Zone 0, IIC, T4–6 hazardous area if suitably certified
Div.1, Group A, hazardous location

Minimum output voltage

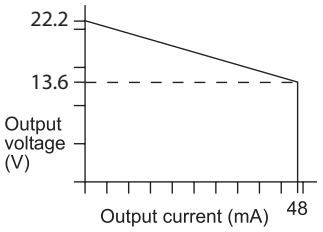

Equivalent output circuit

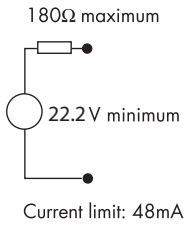

Hazardous-area output

Minimum output voltage:	13.6V at 48mA
Maximum output voltage:	24V from 180Ω
Maximum off-state output voltage:	4V from 180Ω
Current limit:	48mA minimum

Output ripple
< 0.5% of maximum output, peak-to-peak

Control input
Suitable for switch contacts, an open collector transistor or logic drive
0 = input switch closed, transistor on or <1.4V applied
1 = input switch open, transistor off or >4.5V applied

Override input on MTL4524
An open collector transistor or a switch connected across the terminals can be used to turn the output off whatever the state of the control input
0 = transistor on or switch closed
1 = transistor off or switch open

Control and override inputs on MTL4524

Control input	Override input	Output state
0	0	off
0	1	on
1	0	off
1	1	off

Response time
Output within 10% of final value within 100ms

MTL4524

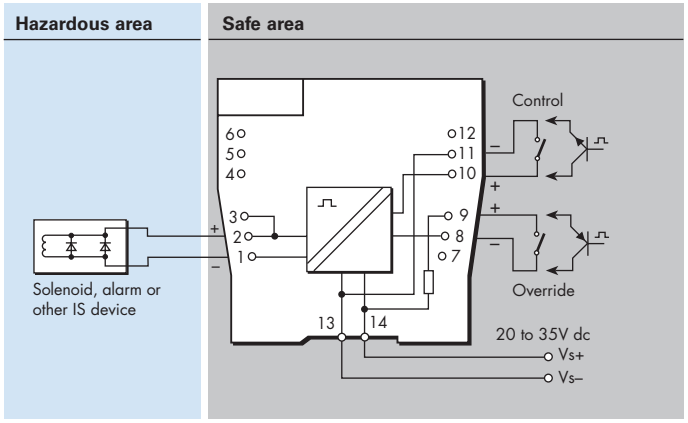

MTL5524

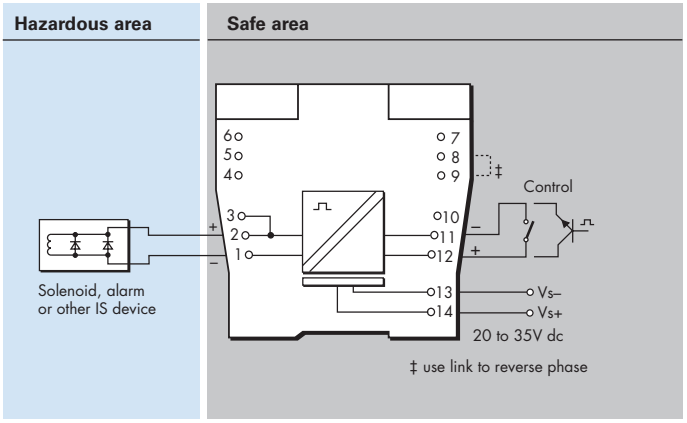

LED indicators
Green: power indication
Yellow: output status, on when output active

Maximum current consumption
100mA at 24V dc

Power dissipation within unit
1.3W with typical solenoid valve, output on
1.9W worst case

Safety description
U_o=25V I_o=147mA P_o= 0.92W U_m = 253V rms or dc

SIL capable
These models have been assessed for use in IEC 61508 functional safety applications.
SIL2 capable for a single device (HFT=0)
SIL3 capable for multiple devices in safety redundant configurations (HFT=1)
See data on MTL web site and refer to the safety manual.

The given data is only intended as a product description and should not be regarded as a legal warranty of properties or guarantee.
In the interest of further technical developments, we reserve the right to make design changes.

Powering Business Worldwide

Eaton Electric Limited,
Great Marlings, Butterfield, Luton
Beds, LU2 8DL, UK.
Tel: + 44 (0)1582 723633 Fax: + 44 (0)1582 422283
E-mail: mtlenquiry@eaton.com
www.eaton.com

© 2025 Eaton
All Rights Reserved
Publication No.
EPSx524 Rev8 040517

EUROPE (EMEA):
+44 (0)1582 723633 mtlenquiry@eaton.com
THE AMERICAS:
+1 800 835 7075 mtl-us-info@eaton.com
ASIA-PACIFIC:
+65 6 645 9888 sales.mtlsing@eaton.com

MTL4524S
SOLENOID/ALARM DRIVER
switch operated with 24V override, IIC

The MTL4524S enables an on/off device in a hazardous area to be controlled by a volt-free contact or a floating logic signal in the safe area. It can drive loads such as solenoids, alarms, LEDs and other low power devices that are certified as intrinsically safe or are classified as non-energy storing simple apparatus. By connecting a second safe-area voltage, the output can be disabled to permit, for example, a safety system to override a control signal.

SPECIFICATION

See also common specification

Number of channels
One

Location of load
Zone 0, IIC, T4–6 hazardous area if suitably certified
Div.1, Group A, hazardous location

Minimum output voltage

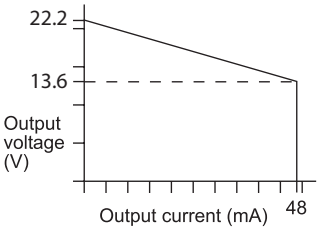

Equivalent output circuit

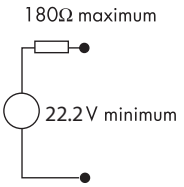

Current limit: 48mA

Hazardous-area output

Minimum output voltage:	13.6V at 48mA
Maximum output voltage:	24V from 180Ω
Maximum off-state output voltage:	4V from 180Ω
Current limit:	48mA minimum

Output ripple
< 0.5% of maximum output, peak-to-peak

Control input (must be fully-floating)
Suitable for switch contacts or an opto-isolator
0 = input switch closed, transistor on or < 1.4V applied
1 = input switch open, transistor off or > 4.5V applied

Override input
A 24V logic signal applied across the terminals allows the solenoid/alarm to be operated by the control input. If it is disconnected, the solenoid/alarm is off.
0 = < 2.0V applied across terminals 8 & 9
1 = > 9.0V applied across terminals 8 & 9
(nominal switching point 4.5V)

Control and override inputs

Control input	Override input	Output state
0	0	off
0	1	on
1	0	off
1	1	off

Response time
Output within 10% of final value within 100ms

MTL4524S

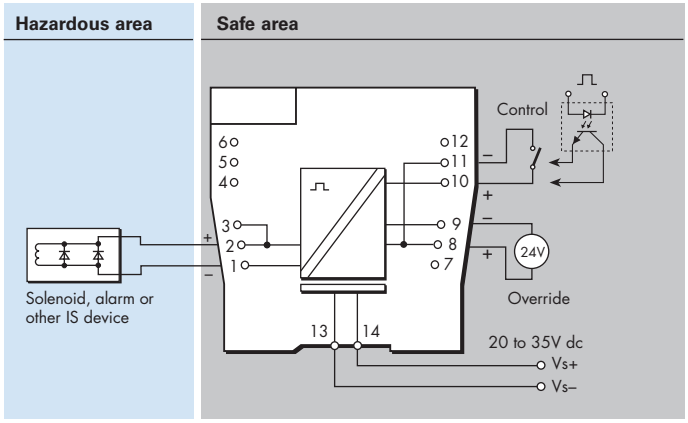

LED indicators
Green: power indication
Yellow: output status, on when output active

Maximum current consumption
100mA at 24V dc

Power dissipation within unit
1.3W with typical solenoid valve, output on
1.9W worst case

Safety description
U_o=25V I_o=147mA P_o= 0.92W U_m = 253V rms or dc

SIL capable
These models have been assessed for use in IEC 61508 functional safety applications.
SIL2 capable for a single device (HFT=0)
SIL3 capable for multiple devices in safety redundant configurations (HFT=1)
See data on MTL web site and refer to the safety manual.

The given data is only intended as a product description and should not be regarded as a legal warranty of properties or guarantee.
In the interest of further technical developments, we reserve the right to make design changes.

Powering Business Worldwide

Eaton Electric Limited,
Great Marlings, Butterfield, Luton
Beds, LU2 8DL, UK.
Tel: + 44 (0)1582 723633 Fax: + 44 (0)1582 422283
E-mail: mtlenquiry@eaton.com
www.eaton.com

© 2025 Eaton
All Rights Reserved
Publication No.
EPS4524S Rev6 040517

EUROPE (EMEA):
+44 (0)1582 723633 mtlenquiry@eaton.com
THE AMERICAS:
+1 800 835 7075 mtl-us-info@eaton.com
ASIA-PACIFIC:
+65 6 645 9888 sales.mtlsing@eaton.com

MTL4525 – MTL5525 SOLENOID/ALARM DRIVER

switch operated with override, IIC, low power

The MTLx525 enables an on/off device in a hazardous area to be controlled by a volt-free contact or logic signal in the safe area. It can drive loads such as solenoids, alarms, LEDs and other low power devices that are certified as intrinsically safe or are classified as non-energy storing simple apparatus.

The MTL4525 allows a second safe-area switch or logic signal to be connected that enables the output to be disabled to permit, for example, a safety system to override a control signal.

SPECIFICATION

See also common specification

Number of channels
One

Location of load
Zone 0, IIC, T4–6 hazardous area if suitably certified
Div.1, Group A, hazardous location

Minimum output voltage

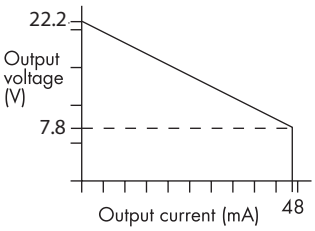

Equivalent output circuit

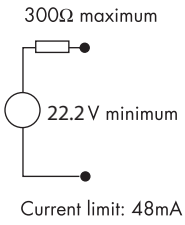

Hazardous-area output

Minimum output voltage:	7.8V at 48mA
Maximum output voltage:	24V from 300Ω
Maximum off-state output voltage:	4V from 300Ω
Current limit:	48mA minimum

Output ripple
< 0.5% of maximum output, peak-to-peak

Control input on MTL4525
Suitable for switch contacts, an open collector transistor or logic drive
0 = input switch closed, transistor on or < 1.4V applied
1 = input switch open, transistor off or > 4.5V applied

Override input on MTL4525
An open collector transistor or a switch connected across the terminals can be used to turn the output off whatever the state of the control input
0 = transistor on or switch closed
1 = transistor off or switch open

Control and override inputs on MTL4525

Control input	Override input	Output state
0	0	off
0	1	on
1	0	off
1	1	off

Response time
Output within 10% of final value within 100ms

MTL4525

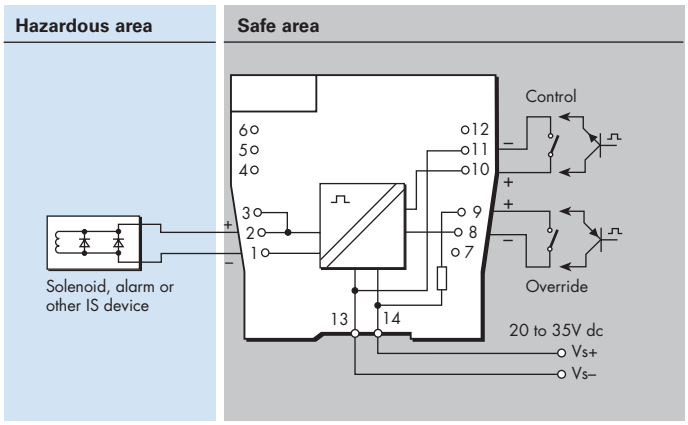

MTL5525

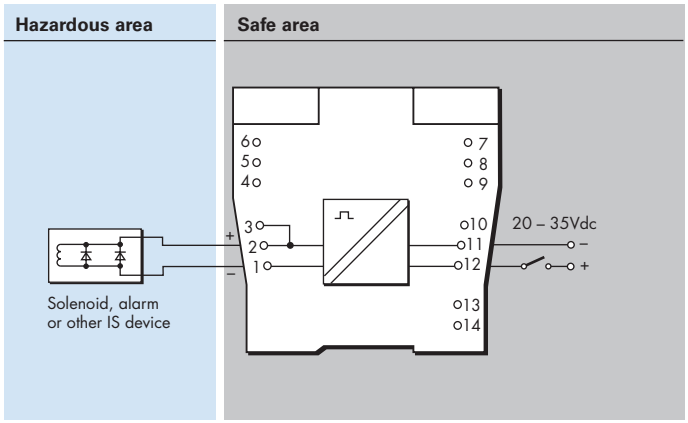

LED indicators
Green: power indication
Yellow: output status, on when output active

Maximum current consumption
100mA at 24V dc

Power dissipation within unit
1.3W with typical solenoid valve, output on
1.9W worst case

Safety description
U_o=25V I_o=83.3mA P_o=0.52W U_m = 253V rms or dc

SIL capable
These models have been assessed for use in IEC 61508 functional safety applications.
SIL2 (SIL3 for MTL5525) capable for a single device (HFT=0)
SIL3 capable for multiple devices in safety redundant configurations (HFT=1)
See data on MTL web site and refer to the safety manual.

The given data is only intended as a product description and should not be regarded as a legal warranty of properties or guarantee.
In the interest of further technical developments, we reserve the right to make design changes.

Powering Business Worldwide

Eaton Electric Limited,
Great Marlings, Butterfield, Luton
Beds, LU2 8DL, UK.
Tel: + 44 (0)1582 723633 Fax: + 44 (0)1582 422283
E-mail: mtlenquiry@eaton.com
www.eaton.com

© 2025 Eaton
All Rights Reserved
Publication No.
EPSx525 Rev8 040517

EUROPE (EMEA):
+44 (0)1582 723633 mtlenquiry@eaton.com
THE AMERICAS:
+1 800 835 7075 mtl-us-info@eaton.com
ASIA-PACIFIC:
+65 6 645 9888 sales.mtlsing@eaton.com

MTL4526 – MTL5526 SWITCH-OPERATED RELAY

2–channel IS–output

The MTLx526 enables two separate IS circuits in a hazardous area to be contact controlled by one or two, on/off, control signals in a safe area. Applications include the calibration of strain–gauge bridges; changing the polarity (and thereby the tone) of an IS sounder; the testing of IS fire alarms; and the transfer of safe-area signals into an annunciator with IS input terminals not segregated from each other. The output–relay contacts are certified as non–energy–storing apparatus, and can be connected to any IS circuit without further certification, provided that separate IS circuits are such that they would remain safe if connected together.

SPECIFICATION

See also common specification

Number of channels
Two, fully floating

Location of control circuit
Safe area

Input/output characteristics
Contact/Logic mode
(Inputs suitable for switch contacts, an open–collector transistor or logic drive)

Relay energised if	< 450Ω or < 1V applied
Relay de–energised if	> 5kΩ or > 2V applied (35V max.)

Loop powered mode

Relay energised if	>20V
Relay de-energised if	<17V

Power supply failure protection
Relays de–energised if supply fails

Response time
25ms nominal

Contacts (suitable for connection to IS circuits)
1–pole changeover per channel

Contact rating
250V ac, limited to 40V dc for IS applications, 2A
(reactive loads must be suppressed)

Contact life expectancy
2 x 10^7 operations at maximum IS load

Relay drive (see switch setting table)
Choice of "loop-powered" or "contact/logic" control, for both channels, by switch selection. A further switch option ("1in2out") enables either input, in contact/logic mode, to activate both outputs.

MTL4526

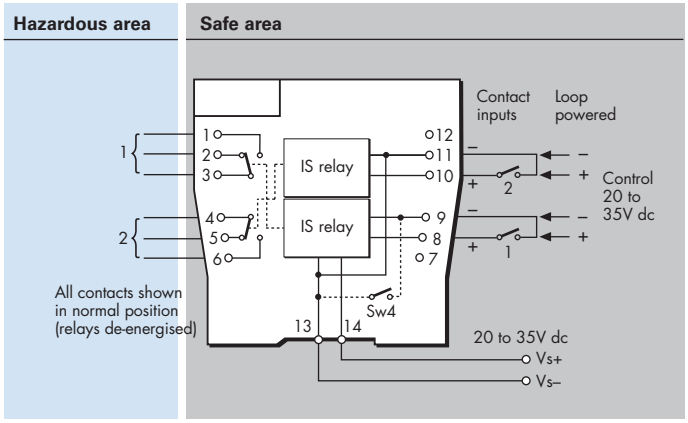

MTL5526

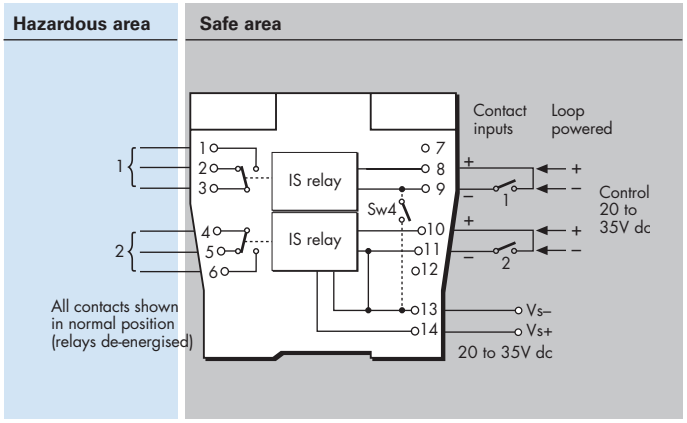

LED indicators
Green: power indication
Yellow: two: output status, on when relay energised

Power requirement, Vs
41mA at 20V dc
44mA at 24V dc
60mA at 35V dc

Power dissipation within unit
1.1W maximum at 24V

Safety description (each channel)
Non-energy–storing apparatus: relay contacts may be connected to any IS circuit without further consideration

User switch settings for operating mode

Mode	Function	SW1	SW2	SW3	SW4
Contact/Logic Input	2 ch	Off	On	On	On
	1in2out	On	On	On	On
Loop Powered	2 ch	Off	Off	Off	Off

The given data is only intended as a product description and should not be regarded as a legal warranty of properties or guarantee.
In the interest of further technical developments, we reserve the right to make design changes.

Powering Business Worldwide

Eaton Electric Limited,
Great Marlings, Butterfield, Luton
Beds, LU2 8DL, UK.
Tel: + 44 (0)1582 723633 Fax: + 44 (0)1582 422283
E-mail: mtlenquiry@eaton.com
www.eaton.com

© 2025 Eaton
All Rights Reserved
Publication No.
EPSx526 Rev7 010916

EUROPE (EMEA):
+44 (0)1582 723633 mtlenquiry@eaton.com
THE AMERICAS:
+1 800 835 7075 mtl-us-info@eaton.com
ASIA-PACIFIC:
+65 6 645 9888 sales.mtlsing@eaton.com

MTL4531 – MTL5531 VIBRATION TRANSDUCER INTERFACE

The MTLx531 repeats a signal from a vibration sensor in a hazardous area, providing an output for a monitoring system in the safe area. The interface is compatible with 3-wire eddy-current probes and accelerometers or 2-wire current sensors; the selection is made by a switch on the side of the module.

SPECIFICATION

See also common specification

Number of channels
One
Sensor type
2- or 3-wire vibration transducer
Location of signal source
Zone 0, IIC, T4–6 hazardous area if suitably certified
Div. 1, Group A hazardous location
Hazardous-area input
Input impedance
(terminals 2 & 3): 10kΩ
Transducer supply voltage, 3-wire (terminals 3 & 1)

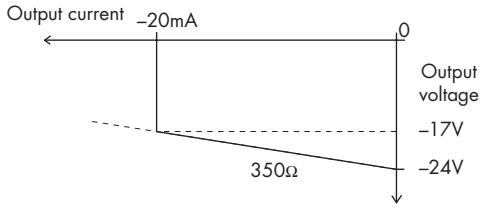

Transducer supply current, 2-wire
3.3mA (nom.) for 2-wire sensors, user selectable by switch
Signal range
Minimum –20V, maximum –0.5V
DC transfer accuracy at 20°C
<±50mV
AC transfer accuracy at 20°C
0Hz to 1kHz: ±1%
1kHz to 10kHz: –5% to +1%
10kHz to 20kHz: –10% to +1%
Temperature coefficient
±50ppm/°C (10 to 65°C)
±100ppm/°C (–20 to 10°C)
Voltage bandwidth
–3dB at 47kHz (typical)
Phase response
<14µs, equivalent to:
–1° at 200Hz
–3° at 600Hz
–5° at 1kHz
–50° at 10kHz
–100° at 20kHz
Safe-area output impedance
<20Ω
LED indicator
Green: power indication

MTL4531

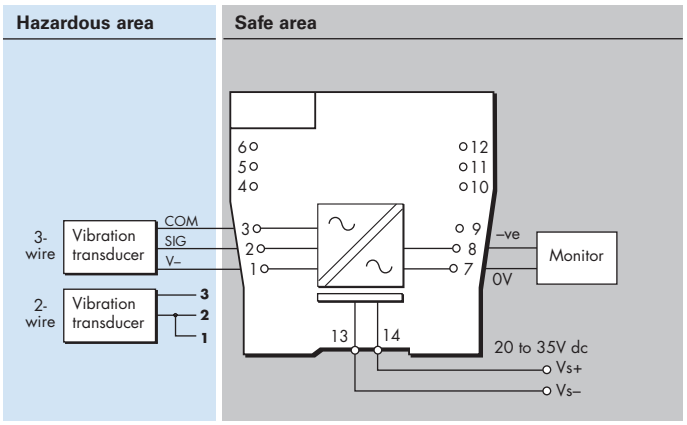

MTL5531

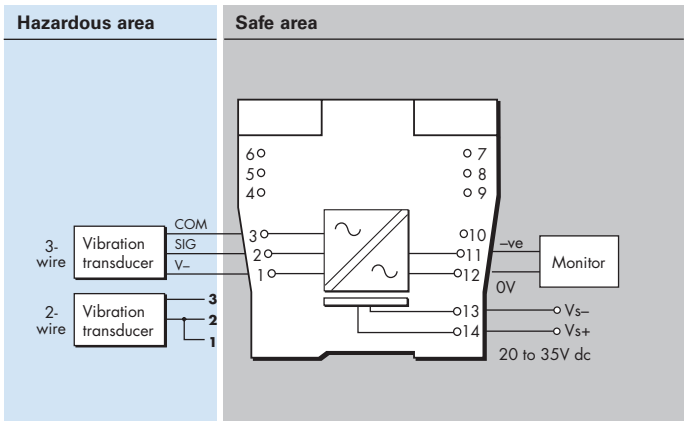

Supply voltage
20 to 35V dc
Maximum current consumption (10mA transducer load)
65mA at 24V
Maximum power dissipation within unit
1.33W
Safety description
Terminals 3 to 1
U_o=26.6V I_o=94mA P_o=0.66W U_m = 253V rms or dc
Terminals 3 to 2
Non-energy-storing apparatus ≤1.5V, ≤0.1A and ≤25mW

SIL capable
These models have been assessed for use in IEC 61508 functional safety applications up to SIL2.
See data on MTL web site and refer to the safety manual.

The given data is only intended as a product description and should not be regarded as a legal warranty of properties or guarantee.
In the interest of further technical developments, we reserve the right to make design changes.

Eaton Electric Limited,
Great Marlings, Butterfield, Luton
Beds, LU2 8DL, UK.
Tel: + 44 (0)1582 723633 Fax: + 44 (0)1582 422283
E-mail: mtlenquiry@eaton.com
www.eaton.com

© 2025 Eaton
All Rights Reserved
Publication No.
EPSx531 Rev10 281118

EUROPE (EMEA):
+44 (0)1582 723633 mtlenquiry@eaton.com
THE AMERICAS:
+1 800 835 7075 mtl-us-info@eaton.com
ASIA-PACIFIC:
+65 6 645 9888 sales.mtlsing@eaton.com

MTL4532 – MTL5532 PULSE ISOLATOR

pulse & 4/20mA current outputs

The MTLx532 isolates pulses from a switch, proximity detector, current pulse transmitter or voltage pulse transmitter located in a hazardous area. It is ideal for applications involving high pulse rates and fast response times, by repeating the pulses into the safe area. An analogue output proportional to frequency is also provided, together with a relay output, which may be configured to act as an alarm. Configuration is carried out with a personal computer.

SPECIFICATION

See also common specification

Number of channels
One, fully floating

Sensor type
Switch or proximity detector (NAMUR/BS EN 60947–5–6:2001)
2– or 3–wire voltage or pulse transmitter

Location of switch
Zone 0, IIC, T6 hazardous area
Div. 1, Group A, hazardous location

Location of proximity detector or transmitter
Zone 0, IIC, T4–T6 if suitably certified
Div.1, Group A, hazardous location

Input
Switch input:
Output ON if switch is closed
Proximity detector input:
Excitation: 7.0 to 9.0V dc from 1kΩ nominal
Output ON if input > 2.1mA* (< 2kΩ)
Output OFF if input < 1.2mA* (> 10kΩ)
Switching hysteresis: 0.2mA (650Ω) nominal
*NAMUR and BS EN 60947–5–6:2001standards
Current pulse input:
Transmitter supply: 16.5V dc at 20mA
Short circuit current: 24mA
Output: I_{in} > 9.0mA = ON, I_{in} < 7.0mA = OFF
Switching hysteresis: 0.5mA
Voltage pulse input
Input impedance: > 10kΩ
Switching point voltage (V_{sp}): 3, 6, or 12V nominal
(User selectable by switches on the side of the module)
Output: $V_{in} > V_{sp}$ = ON, $V_{in} < V_{sp}$ = OFF
Switching hysteresis: 100mV + (0.1 x V_{sp}) typical

Safe-area pulse output
Maximum delay: 10µs
Maximum off–state voltage: 35V
Maximum off–state leakage current: 10µA
Maximum on–state resistance: 25Ω
Maximum on–state current: 50mA
Output OFF if supply fails
Note: LFD signal is Zener-diode protected against inductive loads

Safe-area current output
Input capture delay: 2 signal periods (5ms min.)
Signal range: 4 to 20mA
Under/over range: 0 to 22mA
Load resistance: 0 to 450Ω @20mA
Output resistance: >1MΩ
Ripple: < 50µA peak-to-peak
Accuracy: better than 20µA at 20°C
Temperature drift: < 1µA/°C
Risetime (10% - 90%, after step change): 60 ms

Alarm output
Relay ON in alarm, 0.5A @ 35Vdc max.

MTL4532

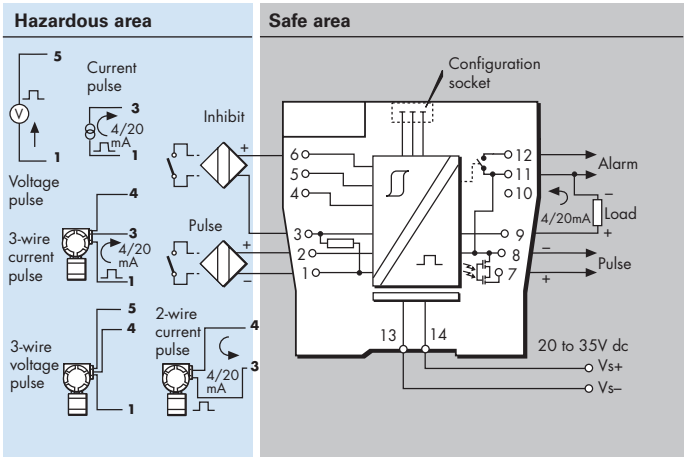

MTL5532

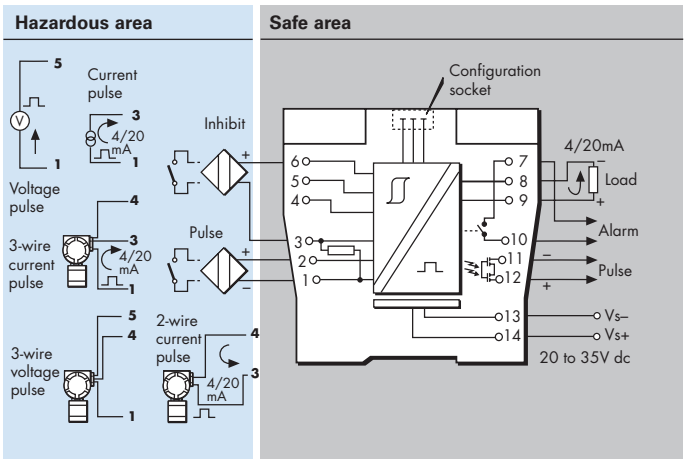

Pulse width
High: 10µs min
Low: 10µs min

Frequency range
0 – 50kHz - pulse output mode
0 – 10KHz - for analogue output

LED indicators
Green: power indication
Yellow: on when output circuit is on
Red: flashing when line fault or error

Power requirement
65mA at 24V dc
70mA at 20V dc
55mA at 35V dc

Power dissipation within unit
1.35W maximum at 24V
1.75W maximum at 35V

Safety description (U_m = 253V rms or dc)
Terminals 2 to 1 and 6 to 1
U_o=10.5V I_o=14mA P_o=37mW
Terminals 4 to 3 and 1
U_o=28V I_o=93mA P_o=0.65W
Terminals 3 to 1
Non-energy-storing apparatus ≤1.5V, ≤0.1A and ≤25mW; can be connected without further certification into any IS loop with an open-circuit voltage <28V
Terminals 5 to 4 and 1
V_{max} ≤ 28V, I_{max} ≤ 94mA, P_{max} ≤ 0.65W

Configurator
A personal computer running MTL PCS45 software with a PCL45USB serial interface.

The given data is only intended as a product description and should not be regarded as a legal warranty of properties or guarantee.
In the interest of further technical developments, we reserve the right to make design changes.

Powering Business Worldwide

Eaton Electric Limited,
Great Marlings, Butterfield, Luton
Beds, LU2 8DL, UK.
Tel: + 44 (0)1582 723633 Fax: + 44 (0)1582 422283
E-mail: mtlenquiry@eaton.com
www.eaton.com

© 2025 Eaton
All Rights Reserved
Publication No.
EPSx532 Rev6 220124

EUROPE (EMEA):
+44 (0)1582 723633 mtlenquiry@eaton.com
THE AMERICAS:
+1 800 835 7075 mtl-us-info@eaton.com
ASIA-PACIFIC:
+65 6 645 9888 sales.mtlsing@eaton.com

MTL4541/S – MTL5541/S REPEATER POWER SUPPLY

4/20mA, HART®, 2- or 3-wire transmitters

The MTLx541 provides a fully-floating dc supply for energising a conventional 2- or 3-wire 4/20mA transmitter, which is located in a hazardous area, and repeats the current in another floating circuit to drive a safe-area load. For HART 2-wire transmitters, the unit allows bi-directional communications signals superimposed on the 4/20mA loop current. Alternatively, the MTLx541S acts as a current sink for a safe-area connection rather than driving a current into the load. Separately powered current sources, such as 4-wire transmitters, can be connected but will not support HART communication.

SPECIFICATION

See also common specification

Number of channels
One

Location of transmitter
Zone 0, IIC, T4–6 hazardous area if suitably certified
Div. 1, Group A hazardous location

Safe-area output

Signal range:	4 to 20mA
Under/over-range:	0 to 24mA
Safe-area load resistance (MTLx541)	
@ 24mA:	0 to 360Ω
@ 20mA:	0 to 450Ω
Safe-area load (MTLx541S)	
Current sink:	600Ω max.
Maximum voltage source:	24V dc
Safe-area circuit output resistance:	> 1MΩ

Safe-area circuit ripple
< 50µA peak-to-peak

Hazardous-area input

Signal range:	0 to 24mA (including over-range)
Transmitter voltage:	16.5V at 20mA

Transfer accuracy at 20°C
Better than 15µA

Temperature drift
< 0.8µA/°C

Response time
Settles to within 10% of final value within 50µs

Communications supported
HART (terminals 1 & 2 only)

MTL4541 / MTL4541S

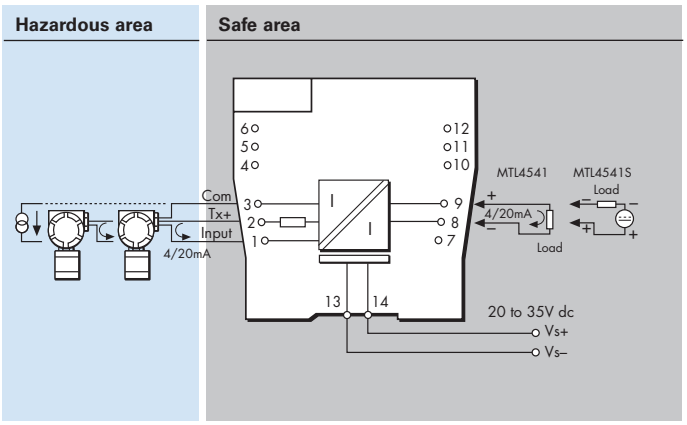

MTL5541 / MTL5541S

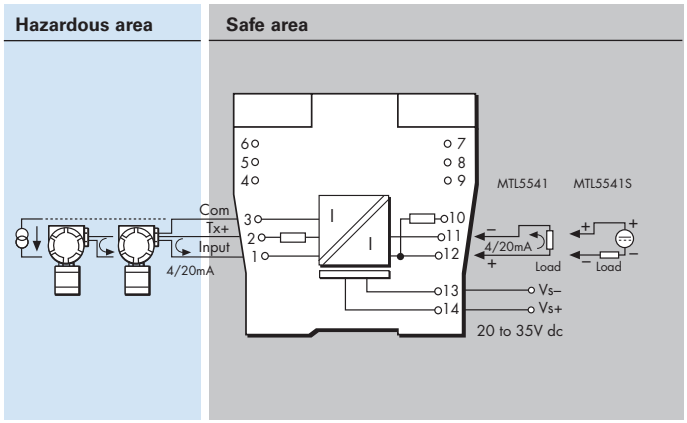

LED indicator
Green: power indication

Maximum current consumption (with 20mA signal)
51mA at 24V

Power dissipation within unit (with 20mA signal)

MTLx541	0.7W @ 24V dc
MTLx541S	1.0W @ 24V dc

Safety description
Terminals 2 to 1 and 3:
U_o=28V I_o=93mA P_o=0.65W U_m = 253V rms or dc
Terminals 1 to 3:
Simple apparatus ≤1.5V, ≤0.1A and ≤25mW; can be connected without further certification into any IS loop with an open-circuit voltage <28V

SIL capable
These models have been assessed for use in IEC 61508 functional safety applications.
SIL3 capable for a single device (HFT=0)
See data on MTL web site and refer to the safety manual.

The given data is only intended as a product description and should not be regarded as a legal warranty of properties or guarantee.
In the interest of further technical developments, we reserve the right to make design changes.

Powering Business Worldwide

Eaton Electric Limited,
Great Marlings, Butterfield, Luton
Beds, LU2 8DL, UK.
Tel: + 44 (0)1582 723633 Fax: + 44 (0)1582 422283
E-mail: mtlenquiry@eaton.com
www.eaton.com

© 2025 Eaton
All Rights Reserved
Publication No.
EPSx541/S Rev8 230524

EUROPE (EMEA):
+44 (0)1582 723633 mtlenquiry@eaton.com
THE AMERICAS:
+1 800 835 7075 mtl-us-info@eaton.com
ASIA-PACIFIC:
+65 6 645 9888 sales.mtlsing@eaton.com

MTL4541A/AS – MTL5541A/AS CURRENT REPEATER

4/20mA passive i/p for HART® transmitters

The MTLx541A provides an input for separately powered 4/20mA transmitters and also allows bi–directional transmission of HART communication signals superimposed on the 4/20mA loop current. Alternatively, the MTLx541AS acts as a current sink for a safe-area connection rather than driving a current into the load.

SPECIFICATION

See also common specification

Number of channels
One

Location of transmitter
Zone 0, IIC, T4–6 hazardous area if suitably certified
Div.1, Group A, hazardous location

Hazardous area input

Signal range:	4 to 20mA
Under/over-range:	1.0 to 21.5mA

Input impedance for HART signals
at terminals 1, 2: > 230Ω

Maximum input volt drop
at terminals 1, 2: < 6.6V
i.e. a transmitter load of 330Ω at 20mA

Safe-area output

Signal range:	4 to 20mA
Under/over-range:	1.0 to 21.5mA
Safe-area load resistance (MTLx541A)	
Conventional transmitters:	0 to 360Ω
Smart transmitters:	250Ω ±10%
Safe-area load (MTLx541AS)	
Current sink:	600Ω max.
Maximum voltage source:	24V DC
Safe-area circuit output resistance:	> 1MΩ

Safe–area circuit ripple
< 50µA peak-to-peak up to 80kHz

Transfer accuracy at 20°C
Better than 20µA

Temperature drift
< 1µA/°C

Response time
Settles within 200µA of final value after 20ms

Communications supported
HART

LED indicator
Green: power indication

Power requirement (with 20mA signal)
50mA at 20V
45mA at 24V
35mA at 35V

MTL4541A / MTL4541AS

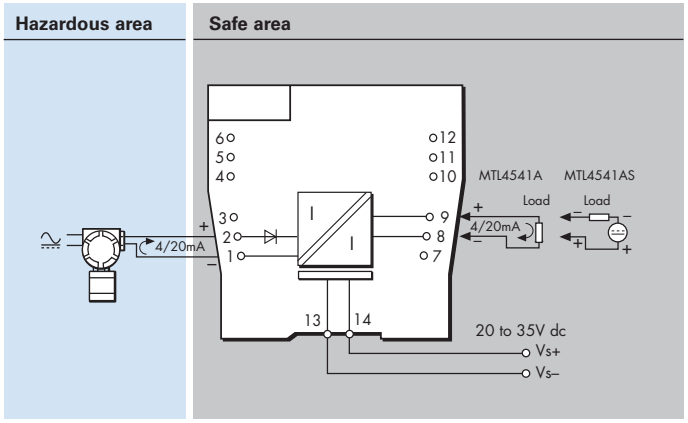

MTL5541A / MTL5541AS

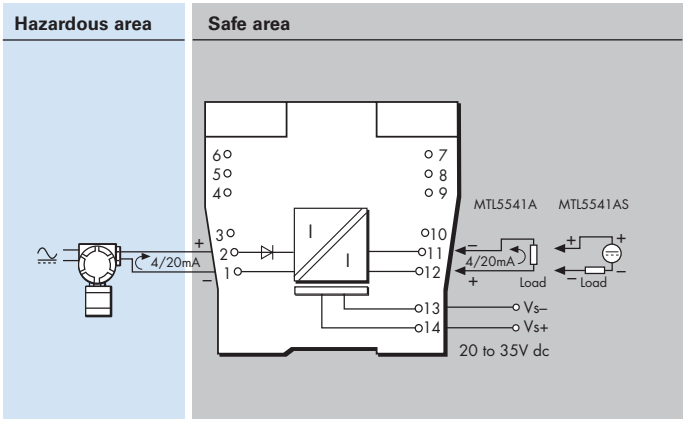

Power dissipation within unit (with 20mA signals)

MTLx541A	0.8W @ 24V dc
MTLx541AS	1.1W @ 24V dc

Safety description
Terminals 1 to 2:
U_m = 253V rms or dc.
8.6V (diode). This voltage must be considered when calculating the load capacitance.
Non-energy-storing apparatus ≤1.5V, ≤0.1A and ≤25mW; can be connected without further certification into any IS loop with an open-circuit voltage <28V

SIL capable
These models have been assessed for use in IEC 61508 functional safety applications.
SIL2 capable for a single device (HFT=0)
See data on MTL web site and refer to the safety manual.

The given data is only intended as a product description and should not be regarded as a legal warranty of properties or guarantee.
In the interest of further technical developments, we reserve the right to make design changes.

Powering Business Worldwide

Eaton Electric Limited,
Great Marlings, Butterfield, Luton
Beds, LU2 8DL, UK.
Tel: + 44 (0)1582 723633 Fax: + 44 (0)1582 422283
E-mail: mtlenquiry@eaton.com
www.eaton.com

© 2025 Eaton
All Rights Reserved
Publication No.
EPSx541A/AS Rev6 290620

EUROPE (EMEA):
+44 (0)1582 723633 mtlenquiry@eaton.com
THE AMERICAS:
+1 800 835 7075 mtl-us-info@eaton.com
ASIA-PACIFIC:
+65 6 645 9888 sales.mtlsing@eaton.com

MTL4541B
REPEATER POWER SUPPLY

4/20mA, HART®, for 2- or 3-wire transmitters

The MTL4541B provides a fully-floating dc supply for energising a conventional 2- or 3-wire 4/20mA transmitter which is located in a hazardous area, and repeats the current in another circuit to drive a safe-area load. For HART 2-wire transmitters, the unit allows bi-directional communications signals superimposed on the 4/20mA loop current.

SPECIFICATION

See also common specification

Number of channels
One

Location of transmitter
Zone 0, IIC, T4–6 hazardous area if suitably certified
Div. 1, Group A hazardous location

Safe-area output

Signal range:	4 to 20mA
Under/over-range:	0 to 24mA
Safe-area load resistance:	0 to 360Ω @ 24mA
	0 to 450Ω @ 20mA
Safe-area circuit output resistance:	> 1MΩ

Safe-area circuit ripple
<50µA peak-to-peak

Hazardous-area input

Signal range:	0 to 24mA (including over-range)
Transmitter voltage:	16.5V at 20mA

Transfer accuracy at 20°C
Better than 15µA

Temperature drift
< 0.8µA/°C

Response time
Settles to within 10% of final value within 50µs

Communications supported
HART (terminals 1 & 2 only)

MTL4541B

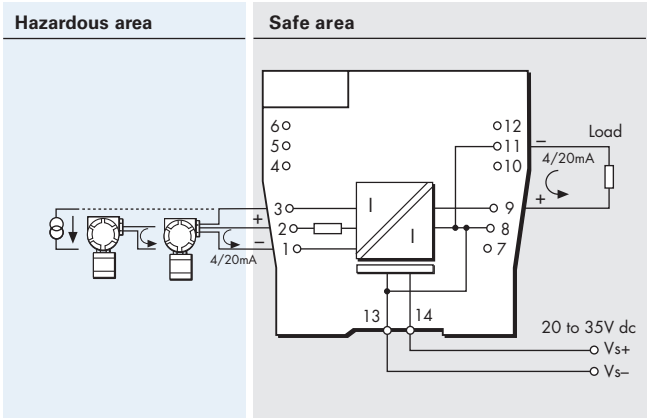

Note: Safe area output referenced to PSU –ve

LED indicator
Green: power indication

Maximum current consumption (with 20mA signal)
51mA at 24V

Power dissipation within unit (with 20mA signal)
0.7W at 24V

Safety description

Terminals 2 to 1 and 3:
V_o=28V I_o=93mA P_o=0.65W U_m = 253V rms or dc

Terminals 1 to 3:
Simple apparatus ≤1.5V, ≤0.1A and ≤25mW; can be connected without further certification into any IS loop with an open-circuit voltage <28V

The given data is only intended as a product description and should not be regarded as a legal warranty of properties or guarantee.
In the interest of further technical developments, we reserve the right to make design changes.

Powering Business Worldwide

Eaton Electric Limited,
Great Marlings, Butterfield, Luton
Beds, LU2 8DL, UK.
Tel: + 44 (0)1582 723633 Fax: + 44 (0)1582 422283
E-mail: mtlenquiry@eaton.com
www.eaton.com

© 2025 Eaton
All Rights Reserved
Publication No.
EPS4541B Rev 4 190124

EUROPE (EMEA):
+44 (0)1582 723633 mtlenquiry@eaton.com
THE AMERICAS:
+1 800 835 7075 mtl-us-info@eaton.com
ASIA-PACIFIC:
+65 6 645 9888 sales.mtlsing@eaton.com

MTL4541T
REPEATER POWER SUPPLY

4/20mA, 2- or 3-wire transmitters using long field lines

The MTL4541T provides a fully-floating dc supply for energising a conventional 2- or 3-wire 4/20mA transmitter, which is located in a hazardous area, and repeats the current in another floating circuit to drive a safe-area load. For HART 2-wire transmitters, the unit allows bi-directional communications signals superimposed on the 4/20mA loop current. Separately powered current sources, such as 4-wire transmitters, can be connected but will not support HART communication. The reduced maximum open-circuit voltage permits the use of longer field lines compared to MTL4541.

MTL4541T

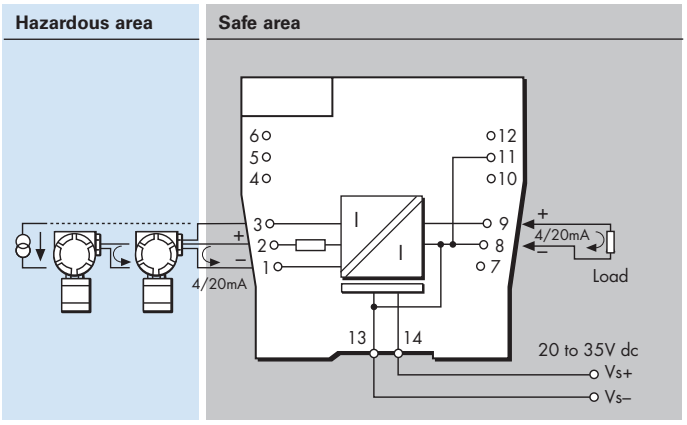

SPECIFICATION

See also common specification

Number of channels
One

Location of transmitter
Zone 0, IIC, T4–6 hazardous area if suitably certified
Div. 1, Group A hazardous location

Safe-area output

Signal range:	4 to 20mA
Under/over-range:	0 to 24mA
Safe-area load resistance	
@ 24mA:	0 to 250Ω
@ 20mA:	0 to 325Ω

Safe-area circuit ripple
< 50µA peak-to-peak

Hazardous-area input

Signal range:	0 to 24mA (including over-range)
Transmitter voltage:	14V at 20mA

Transfer accuracy at 20°C
Better than 15µA

Temperature drift
< 0.8µA/°C

Response time
Settles to within 10% of final value within 50µs

Communications supported
HART (terminals 1 & 2 only)

LED indicator
Green: power indication

Maximum current consumption (with 20mA signal)
51mA at 24V

Power dissipation within unit (with 20mA signal)
0.7W @ 24V dc

Safety description
Terminals 2 to 1:
V_o=22V I_o=167mA P_o=920mW U_m = 253V rms or dc
Terminals 3 to 1:
Simple apparatus ≤1.5V, ≤0.1A and ≤25mW; can be connected without further certification into any IS loop with an open-circuit voltage <28V

The given data is only intended as a product description and should not be regarded as a legal warranty of properties or guarantee.
In the interest of further technical developments, we reserve the right to make design changes.

Eaton Electric Limited,
Great Marlings, Butterfield, Luton
Beds, LU2 8DL, UK.
Tel: + 44 (0)1582 723633 Fax: + 44 (0)1582 422283
E-mail: mtlenquiry@eaton.com
www.eaton.com

© 2025 Eaton
All Rights Reserved
Publication No.
EPS4541T Rev2 010916

EUROPE (EMEA):
+44 (0)1582 723633 mtlenquiry@eaton.com
THE AMERICAS:
+1 800 835 7075 mtl-us-info@eaton.com
ASIA-PACIFIC:
+65 6 645 9888 sales.mtlsing@eaton.com

MTL5541/S -T
REPEATER POWER SUPPLY
4/20mA, HART®, 2- or 3-wire transmitters

The MTL5541-T provides a fully-floating dc supply for energising a conventional 2- or 3-wire 4/20mA transmitter, which is located in a hazardous area, and repeats the current in another floating circuit to drive a safe-area load. For HART 2-wire transmitters, the unit allows bi-directional communications signals superimposed on the 4/20mA loop current. Alternatively, the MTL5541S-T acts as a current sink for a safe-area connection rather than driving a current into the load. Separately powered current sources, such as 4-wire transmitters, can be connected but will not support HART communication.

MTL5541-T / MTL5541S-T

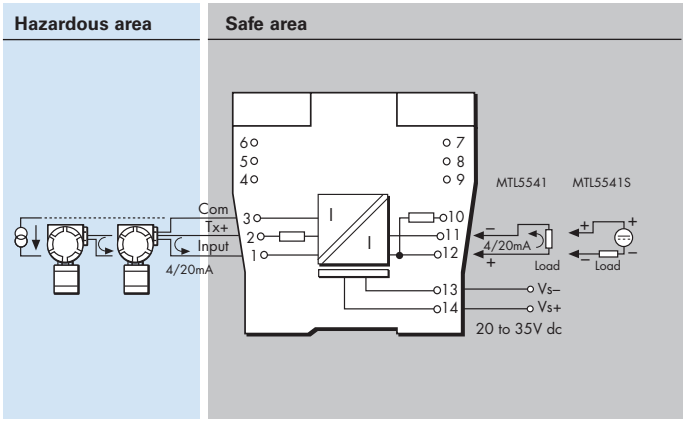

SPECIFICATION

See also common specification

Number of channels
One

Location of transmitter
Zone 0, IIC, T4–6 hazardous area if suitably certified
Div. 1, Group A hazardous location

Safe-area output

Signal range:	4 to 20mA
Under/over-range:	0 to 24mA
Safe-area load resistance (MTL5541-T)	
@ 24mA:	0 to 360Ω
@ 20mA:	0 to 450Ω
Safe-area load (MTL5541S-T)	
Current sink:	600Ω max.
Maximum voltage source:	24V dc
Safe-area circuit output resistance:	> 1MΩ

Safe-area circuit ripple
< 50µA peak-to-peak

Hazardous-area input

Signal range:	0 to 24mA (including over-range)
Transmitter voltage:	16.5V at 20mA

Transfer accuracy at 20°C
Better than 15µA

Temperature drift
< 0.8µA/°C

Response time
Settles to within 10% of final value within 50µs

Communications supported
HART (terminals 1 & 2 only)

LED indicator
Green: power indication

Maximum current consumption (with 20mA signal)
51mA at 24V

Power dissipation within unit (with 20mA signal)

MTL5541-T	0.7W @ 24V dc
MTL5541S-T	1.0W @ 24V dc

Safety description
Terminals 2 to 1 and 3:
U_o=28V I_o=93mA P_o=0.65W U_m = 253V rms or dc
Terminals 1 to 3:
Simple apparatus ≤1.5V, ≤0.1A and ≤25mW; can be connected without further certification into any IS loop with an open-circuit voltage <28V

Ambient temperature limits
-20°C to + 65°C (-6 to + 149°F) operating
-40°C to + 80°C (-40 to + 176°F) storage

The given data is only intended as a product description and should not be regarded as a legal warranty of properties or guarantee.
In the interest of further technical developments, we reserve the right to make design changes.

Eaton Electric Limited,
Great Marlings, Butterfield, Luton
Beds, LU2 8DL, UK.
Tel: + 44 (0)1582 723633 Fax: + 44 (0)1582 422283
E-mail: mtlenquiry@eaton.com
www.eaton.com

© 2025 Eaton
All Rights Reserved
Publication No.
EPS5541/S-T Rev2 190124

EUROPE (EMEA):
+44 (0)1582 723633 mtlenquiry@eaton.com
THE AMERICAS:
+1 800 835 7075 mtl-us-info@eaton.com
ASIA-PACIFIC:
+65 6 645 9888 sales.mtlsing@eaton.com

MTL4544/S – MTL5544/S REPEATER POWER SUPPLY

2-channel, 4/20mA, HART®, 2- or 3- wire transmitters

The MTLx544 provides fully-floating dc supplies for energising two conventional 2-wire or 3-wire 4/20mA or HART transmitters located in a hazardous area, and repeats the current in other circuits to drive two safe-area loads. For smart transmitters, the unit allows bi-directional transmission of digital communication signals superimposed on the 4/20mA loop current. Alternatively, the MTLx544S acts as a current sink for a safe-area connection rather than driving a current into the load. Separately powered current sources, such as 4-wire transmitters, can be connected but will not support HART communication.

SPECIFICATION

See also common specification

Number of channels
Two

Location of transmitter
Zone 0, IIC, T4–6 hazardous area if suitably certified
Div. 1, Group A hazardous location

Safe-area output

Signal range:	4 to 20mA
Under/over-range:	0 to 24mA
Safe-area load resistance (MTLx 544)	
@ 24mA:	0 to 360Ω
@ 20mA:	0 to 450Ω
Safe-area load (MTLx544S)	
Current sink:	600Ω max.
Maximum voltage source:	24V dc
Safe-area circuit output resistance:	> 1MΩ

Safe-area circuit ripple
< 50µA peak-to-peak

Hazardous-area input

Signal range:	0 to 24mA (including over-range)
Transmitter voltage:	16.5V at 20mA

Transfer accuracy at 20°C
Better than 15µA

Temperature drift
< 0.8µA/°C

Response time
Settles to within 10% of final value within 50µs

Communications supported
HART (terminals 1 & 2 and 4 & 5 only)

MTL4544 / MTL4544S

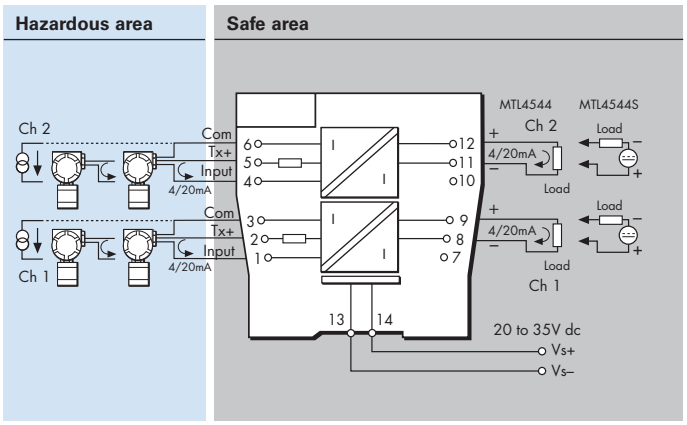

MTL5544 / MTL5544S

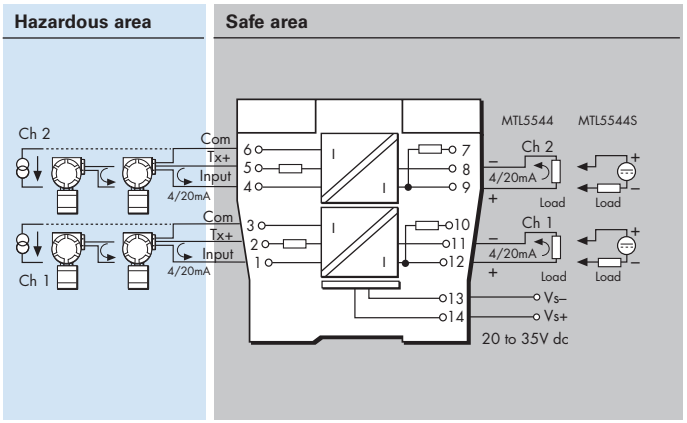

LED indicator
Green: power indication

Maximum current consumption (with 20mA signals)
96mA at 24V dc

Power dissipation within unit (with 20mA signals)

MTLx544	1.4W @ 24V dc
MTLx544S	1.9W @ 24V dc

Safety description (each channel)
Terminals 2 to 1 and 3, and 5 to 4 and 6:
U_o=28V I_o=93mA P_o=0.65W U_m = 253V rms or dc
Terminals 1 to 3 and 4 to 6:
Simple apparatus ≤1.5V, ≤0.1A and ≤25mW; can be connected without further certification into any IS loop with an open-circuit voltage <28V

SIL capable
These models have been assessed for use in IEC 61508 functional safety applications.
SIL3 capable for a single device (HFT=0)
See data on MTL web site and refer to the safety manual.

The given data is only intended as a product description and should not be regarded as a legal warranty of properties or guarantee.
In the interest of further technical developments, we reserve the right to make design changes.

Powering Business Worldwide

Eaton Electric Limited,
Great Marlings, Butterfield, Luton
Beds, LU2 8DL, UK.
Tel: + 44 (0)1582 723633 Fax: + 44 (0)1582 422283
E-mail: mtlenquiry@eaton.com
www.eaton.com

© 2025 Eaton
All Rights Reserved
Publication No.
EPSx544/S Rev 9 230524

EUROPE (EMEA):
+44 (0)1582 723633 mtlenquiry@eaton.com
THE AMERICAS:
+1 800 835 7075 mtl-us-info@eaton.com
ASIA-PACIFIC:
+65 6 645 9888 sales.mtlsing@eaton.com

MTL4544A/AS – MTL5544A/AS CURRENT REPEATER

4/20mA passive i/p for HART® transmitters

The MTLx544A provides an input for separately powered 4/20mA transmitters and also allows bi–directional transmission of HART communication signals superimposed on the 4/20mA loop current, so that the transmitter can be interrogated either from the operator station or by a hand-held communicator (HHC). Alternatively, the MTLx544AS acts as a current sink for a safe-area connection rather than driving a current into the load.

SPECIFICATION

See also common specification

Number of channels
Two

Location of transmitter
Zone 0, IIC, T4–6 hazardous area if suitably certified
Div.1, Group A, hazardous loc ation

Hazardous area input

Signal range:	4 to 20mA
Under/over-range:	1.0 to 21.5mA

Input impedance for HART signals
at terminals 1, 2 and 4, 5: > 230Ω

Maximum input volt drop
at terminals 1, 2 and 4, 5: < 6.6V
i.e. a transmitter load of 330Ω at 20mA

Safe-area output

Signal range:	4 to 20mA
Under/over-range:	1.0 to 21.5mA
Safe-area load resistance (MTL5544A)	
Conventional transmitters:	0 to 360Ω
Smart transmitters:	250Ω ±10%
Safe-area load (MTL5544AS)	
Current sink:	600Ω max.
Maximum voltage source:	24V DC
Safe-area circuit output resistance:	> 1MΩ

Safe–area circuit ripple
< 50µA peak-to-peak up to 80kHz

Transfer accuracy at 20°C
Better than 20µA

Temperature drift
< 1µA/°C

Response time
Settles within 200µA of final value after 20ms

Communications supported
HART

LED indicator
Green: power indication

Power requirement (with 20mA signal)
70mA at 24V
85mA at 20V
50mA at 35V

MTL4544A / MTL4544AS

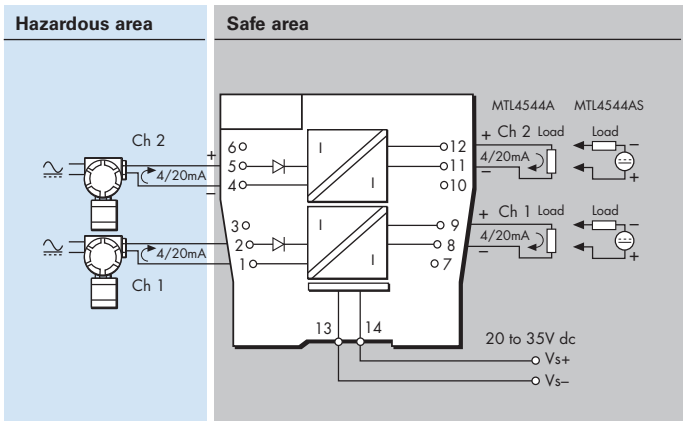

MTL5544A / MTL5544AS

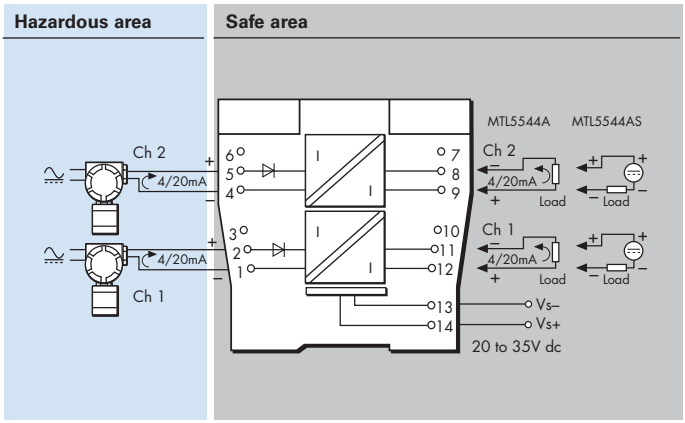

Power dissipation within unit (with 20mA signals)

MTLx544A	1.5W @ 24V dc
MTLx544AS	2.0W @ 24V dc

Safety description
Terminals 1 to 2 and 4 to 5:
U_m = 253V rms or dc.
8.6V (diode). This voltage must be considered when calculating the load capacitance.
Non-energy-storing apparatus ≤1.5V, ≤0.1A and ≤25mW; can be connected without further certification into any IS loop with an open-circuit voltage < 28V

SIL capable
These models have been assessed for use in IEC 61508 functional safety applications.
SIL2 capable for a single device (HFT=0)
See data on MTL web site and refer to the safety manual.

The given data is only intended as a product description and should not be regarded as a legal warranty of properties or guarantee.
In the interest of further technical developments, we reserve the right to make design changes.

Powering Business Worldwide

Eaton Electric Limited,
Great Marlings, Butterfield, Luton
Beds, LU2 8DL, UK.
Tel: + 44 (0)1582 723633 Fax: + 44 (0)1582 422283
E-mail: mtlenquiry@eaton.com
www.eaton.com

© 2025 Eaton
All Rights Reserved
Publication No.
EPSx544A/AS Rev6 290620

EUROPE (EMEA):
+44 (0)1582 723633 mtlenquiry@eaton.com
THE AMERICAS:
+1 800 835 7075 mtl-us-info@eaton.com
ASIA-PACIFIC:
+65 6 645 9888 sales.mtlsing@eaton.com

MTL4544D – MTL5544D REPEATER POWER SUPPLY

single channel, 4/20mA, HART®
for 2- or 3-wire transmitters, two outputs

The MTLx544D provides a fully-floating dc supply for energising a conventional 2- or 3-wire 4/20mA transmitter located in a hazardous area, and repeats the current in other circuits to drive two safe-area loads. For HART 2-wire transmitters, the unit allows bi-directional transmission of digital communication signals superimposed on the 4/20mA loop current. Separately powered current sources, such as 4-wire transmitters, can be connected but will not support HART communication.

SPECIFICATION

See also common specification

Number of channels
One

Location of transmitter
Zone 0, IIC, T4–6 hazardous area if suitably certified
Div. 1, Group A hazardous location

Safe-area output

Signal range:	4 to 20mA
Under/over-range:	0 to 24mA
Safe-area load resistance	
@ 24mA:	0 to 360Ω
@ 20mA:	0 to 450Ω
Safe-area circuit output resistance:	> 1MΩ

Safe-area circuit ripple
< 50µA peak-to-peak

Hazardous-area input

Signal range:	0 to 24mA (including over-range)
Transmitter voltage:	16.5V at 20mA

Transfer accuracy at 20°C
Better than 15µA

Temperature drift
< 0.8µA/°C

Response time
Settles to within 10% of final value within 50µs

Communications supported
HART (terminals 1 & 2, output Ch 1 only)

MTL4544D

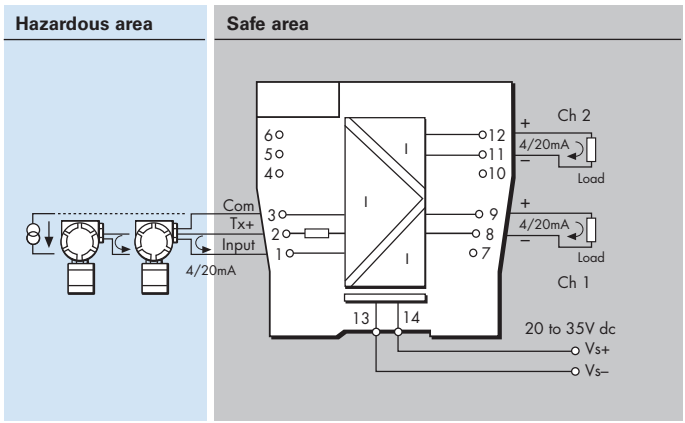

MTL5544D

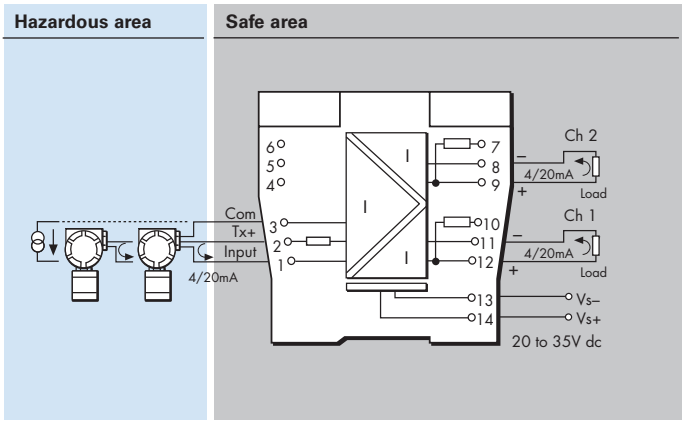

LED indicator
Green: power indication

Maximum current consumption (with 20mA signals)
96mA at 24V dc

Power dissipation within unit (with 20mA signals)
1.4W @ 24V dc

Safety description
Terminals 2 to 1 and 3:
U_o=28V I_o=93mA P_o=0.65W U_m = 253V rms or dc
Terminals 1 to 3:
Simple apparatus ≤1.5V, ≤0.1A and ≤25mW; can be connected without further certification into any IS loop with an open-circuit voltage <28V

SIL capable
These models have been assessed for use in IEC 61508 functional safety applications.
SIL3 capable for a single device (HFT=0)
See data on MTL web site and refer to the safety manual.

The given data is only intended as a product description and should not be regarded as a legal warranty of properties or guarantee.
In the interest of further technical developments, we reserve the right to make design changes.

Powering Business Worldwide

Eaton Electric Limited,
Great Marlings, Butterfield, Luton
Beds, LU2 8DL, UK.
Tel: + 44 (0)1582 723633 Fax: + 44 (0)1582 422283
E-mail: mtlenquiry@eaton.com
www.eaton.com

© 2025 Eaton
All Rights Reserved
Publication No.
EPSx544D Rev 9 230524

EUROPE (EMEA):
+44 (0)1582 723633 mtlenquiry@eaton.com
THE AMERICAS:
+1 800 835 7075 mtl-us-info@eaton.com
ASIA-PACIFIC:
+65 6 645 9888 sales.mtlsing@eaton.com

MTL4546/C/Y – MTL5546/Y ISOLATING DRIVER

for 4–20mA HART® valve positioners with line fault detection

The MTLx546 accepts a 4/20mA floating signal from a safe-area controller to drive a current/pressure converter (or any other load up to 800Ω) in a hazardous area. For HART valve positioners, the module also permits bi-directional transmission of digital communication signals. Process controllers with a readback facility can detect open or short circuits in the field wiring: if these occur, the current taken into the terminals drops to a preset level. The MTL4546C and the MTLx546Y are very similar to the MTLx546 except that they provide open circuit detection only (i.e. no short-circuit detection).

SPECIFICATION

See also common specification

Number of channels
One

Location of I/P converter
Zone 0, IIC, T4–6 hazardous area if suitably certified
Div. 1, Group A, hazardous location

Working range
4 to 20mA

Digital signal bandwidth
500Hz to 10kHz

Maximum load resistance
800Ω (16V at 20mA)

Minimum load resistance
90Ω (short-circuit detection at < 50Ω)

Output resistance
> 1MΩ

Under/over range capability
Under range = 1mA
Over range = 24mA (load ≤ 520Ω)

Input and output circuit ripple
< 40µA peak-to-peak

Transfer accuracy at 20°C
Better than 20µA

Temperature drift
< 1.0µA/°C

Input characteristics

Field wiring state	MTLx546	MTL4546C	MTLx546Y
Normal	< 6.0V	< 6.0V	< 6.0V
Open-circuit	< 0.9mA	< 0.9mA	< 0.5mA
Short-circuit	< 0.9mA	N.A.	N.A.

Response time
Settles within 200µA of final value within 100ms

Communications supported
HART

MTL4546 / MTL4546C / MTL4546Y

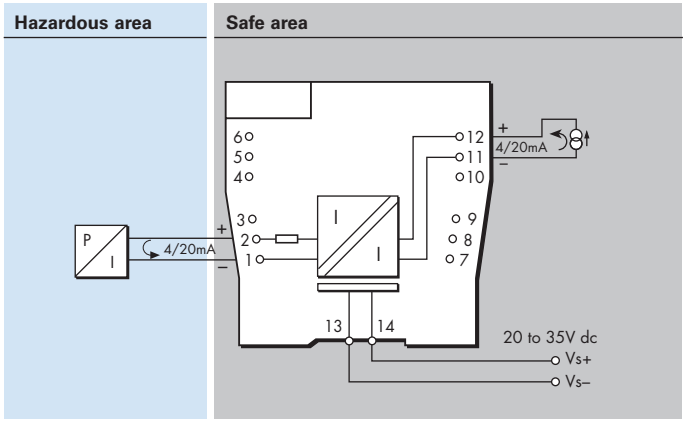

MTL5546 / MTL5546Y

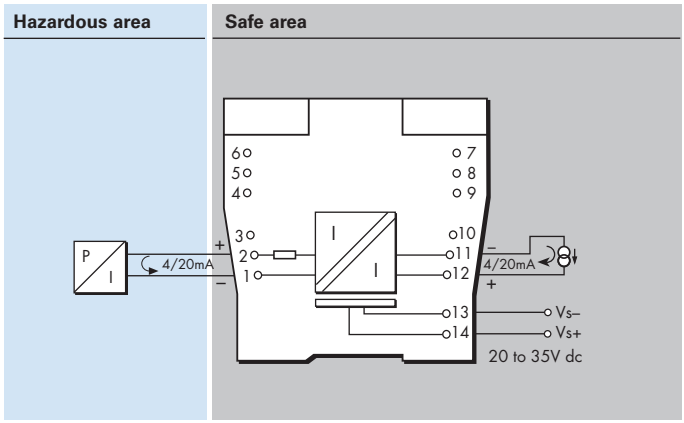

LED indicator
Green: power indication

Maximum current consumption (with 20mA signals into 250Ω load)
35mA at 24V dc

Power dissipation within unit (with 20mA signals into 250Ω load)
0.8W at 24V

Safety description
U_o=28V I_o=93mA P_o=0.65W U_m = 253V rms or dc

SIL capable
These models have been assessed for use in IEC 61508 functional safety applications.
SIL2 capable for a single device (HFT=0)
SIL3 capable for multiple devices in safety redundant configurations (HFT=1)
See data on MTL web site and refer to the safety manual.

The given data is only intended as a product description and should not be regarded as a legal warranty of properties or guarantee.
In the interest of further technical developments, we reserve the right to make design changes.

Eaton Electric Limited,
Great Marlings, Butterfield, Luton
Beds, LU2 8DL, UK.
Tel: + 44 (0)1582 723633 Fax: + 44 (0)1582 422283
E-mail: mtlenquiry@eaton.com
www.eaton.com

© 2025 Eaton
All Rights Reserved
Publication No.
EPSx546/C/Y Rev 7 190124

EUROPE (EMEA):
+44 (0)1582 723633 mtlenquiry@eaton.com
THE AMERICAS:
+1 800 835 7075 mtl-us-info@eaton.com
ASIA-PACIFIC:
+65 6 645 9888 sales.mtlsing@eaton.com

MTL5546Y-T
ISOLATING DRIVER
for 4–20mA HART® valve positioners with line fault detection

The MTL5546Y-T accepts a 4/20mA floating signal from a safe-area controller to drive a current/pressure converter (or any other load up to 800Ω) in a hazardous area. For HART valve positioners, the module also permits bi-directional transmission of digital communication signals. Process controllers with a readback facility can detect open circuit in the field wiring: if this occurs, the current taken into the terminals drops to a preset level.

MTL5546Y-T

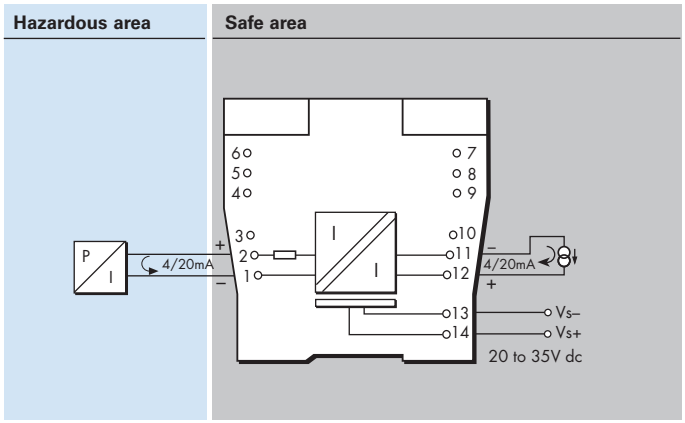

SPECIFICATION

See also common specification

Number of channels
One

Location of I/P converter
Zone 0, IIC, T4–6 hazardous area if suitably certified
Div. 1, Group A, hazardous location

Working range
4 to 20mA

Digital signal bandwidth
500Hz to 10kHz

Maximum load resistance
800Ω (16V at 20mA)

Output resistance
> 1MΩ

Under/over range capability
Under range = 1mA
Over range = 24mA (load ≤ 520Ω)

Input and output circuit ripple
< 40µA peak-to-peak

Transfer accuracy at 20°C
Better than 20µA

Temperature drift
< 1.0µA/°C

Input characteristics

Field wiring state	MTL5546Y-T
Normal	< 6.0V
Open-circuit	< 0.5mA
Short-circuit	N.A.

Response time
Settles within 200µA of final value within 100ms

Communications supported
HART

LED indicator
Green: power indication

Maximum current consumption (with 20mA signals into 250Ω load)
35mA at 24V dc

Power dissipation within unit (with 20mA signals into 250Ω load)
0.8W at 24V

Operating temperature range
-20°C to + 65°C (-6 to + 149°F)

Safety description
U_o=28V I_o=93mA P_o=0.65W U_m = 253V rms or dc

The given data is only intended as a product description and should not be regarded as a legal warranty of properties or guarantee.
In the interest of further technical developments, we reserve the right to make design changes.

Powering Business Worldwide

Eaton Electric Limited,
Great Marlings, Butterfield, Luton
Beds, LU2 8DL, UK.
Tel: + 44 (0)1582 723633 Fax: + 44 (0)1582 422283
E-mail: mtlenquiry@eaton.com
www.eaton.com

© 2025 Eaton
All Rights Reserved
Publication No.
EPS5546Y-T Rev 1 190124

EUROPE (EMEA):
+44 (0)1582 723633 mtlenquiry@eaton.com
THE AMERICAS:
+1 800 835 7075 mtl-us-info@eaton.com
ASIA-PACIFIC:
+65 6 645 9888 sales.mtlsing@eaton.com

MTL4546S-MTL5546S ISOLATING DRIVER

for 4–20mA HART® valve positioners with line fault detection and long field lines

The MTLx546S accepts a 4/20mA floating signal from a safe-area controller to drive a current/pressure converter (or any other load up to 710Ω) in a hazardous area. For HART valve positioners, the module also permits bi-directional transmission of digital communication signals. Process controllers with a readback facility can detect open circuits in the field wiring: if these occur, the current taken into the terminals drops to a preset level. The reduced maximum open-circuit voltage permits the use of longer field lines compared to MTLx546Y

SPECIFICATION

See also common specification

Number of channels
One

Location of I/P converter
Zone 0, IIC, T4–6 hazardous area if suitably certified
Div. 1, Group A, hazardous location

Working range
4 to 20mA

Digital signal bandwidth
500Hz to 10kHz

Maximum load resistance
710Ω (14.2V at 20mA)

Minimum load resistance
90Ω

Output resistance
> 1MΩ

Under/over range capability
Under range = 1mA
Over range = 24mA (load ≤ 520Ω)

Input and output circuit ripple
< 40µA peak-to-peak

Transfer accuracy at 20°C
Better than 20µA

Temperature drift
< 1.0µA/°C

Input characteristics

Field wiring state	
Normal	< 6.0V
Open-circuit	< 0.9mA
Short-circuit	N.A.

Response time
Settles within 200µA of final value within 100ms

Communications supported
HART

MTL4546S

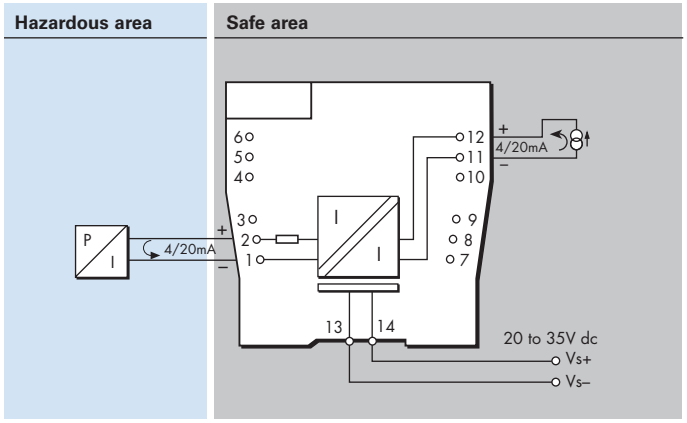

MTL5546S

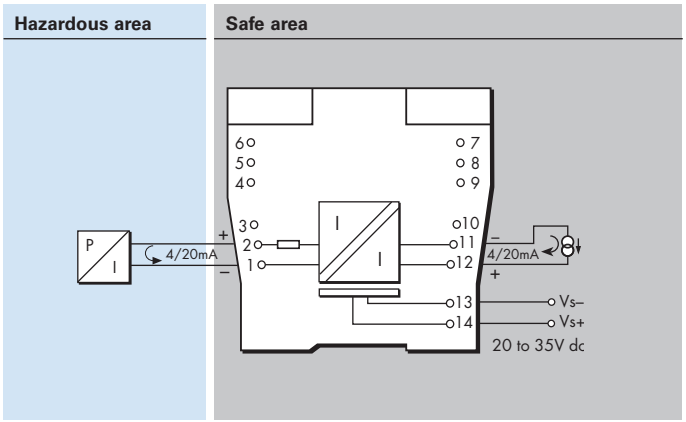

LED indicator
Green: power indication

Maximum current consumption (with 20mA signals into 250Ω load)
35mA at 24V dc

Power dissipation within unit (with 20mA signals into 250Ω load)
0.8W at 24V

Safety description
V_o=22V I_o=100mA P_o=550mW U_m = 253V rms or dc

The given data is only intended as a product description and should not be regarded as a legal warranty of properties or guarantee.
In the interest of further technical developments, we reserve the right to make design changes.

Powering Business Worldwide

Eaton Electric Limited,
Great Marlings, Butterfield, Luton
Beds, LU2 8DL, UK.
Tel: + 44 (0)1582 723633 Fax: + 44 (0)1582 422283
E-mail: mtlenquiry@eaton.com
www.eaton.com

© 2025 Eaton
All Rights Reserved
Publication No.
EPS4546S Rev3 250724

EUROPE (EMEA):
+44 (0)1582 723633 mtlenquiry@eaton.com
THE AMERICAS:
+1 800 835 7075 mtl-us-info@eaton.com
ASIA-PACIFIC:
+65 6 645 9888 sales.mtlsing@eaton.com

MTL4549/C/Y - MTL5549/Y ISOLATING DRIVER

two-channel, for 4–20mA, HART®
valve positioners with line fault detection

The MTLx549 accepts 4/20mA floating signals from safe-area controllers to drive 2 current/pressure converters (or any other load up to 800Ω) in a hazardous area. For HART valve positioners, the module also permits bi-directional transmission of digital communication signals. Process controllers with a readback facility can detect open or short circuits in the field wiring: if these occur, the current taken into the terminals drops to a preset level. The MTL4549C and MTLx549Y are very similar to the MTLx549 except that they provide open circuit detection only (i.e. no short-circuit detection).

SPECIFICATION

See also common specification

Number of channels
Two

Location of I/P converter
Zone 0, IIC, T4–6 hazardous area if suitably certified
Div. 1, Group A, hazardous location

Working range
4 to 20mA

Digital signal bandwidth
500Hz to 10kHz

Maximum load resistance
800Ω (16V at 20mA)

Minimum load resistance
90Ω (short-circuit detection at < 50Ω)

Output resistance
> 1MΩ

Under/over range capability
Under range = 1mA
Over range = 24mA (load ≤ 520Ω)

Input and output circuit ripple
<40µA peak-to-peak

Communications supported
HART

Transfer accuracy at 20°C
Better than 20µA

Temperature drift
< 1.0µA/°C

Input characteristics

Field wiring state	MTL4549	MTL4549C	MTL4549Y
Normal	< 6.0V	< 6.0V	< 6.0V
Open-circuit	< 0.9mA	< 0.9mA	< 0.5mA
Short-circuit	< 0.9mA	N.A.	N.A.

Response time
Settles within 200µA of final value within 100ms

MTL4549 / MTL4549C / MTL4549Y

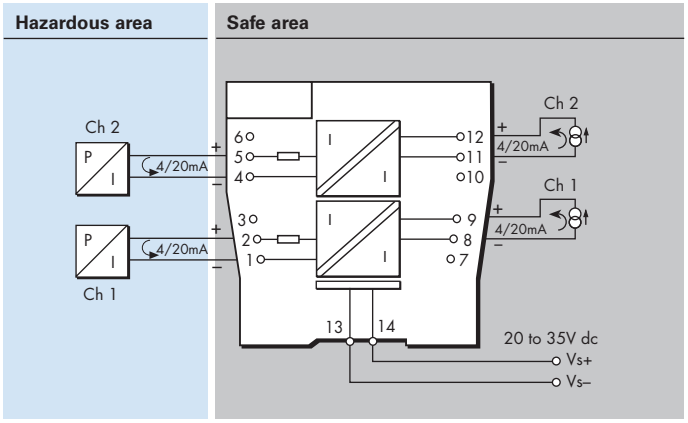

MTL5549 / MTL5549Y

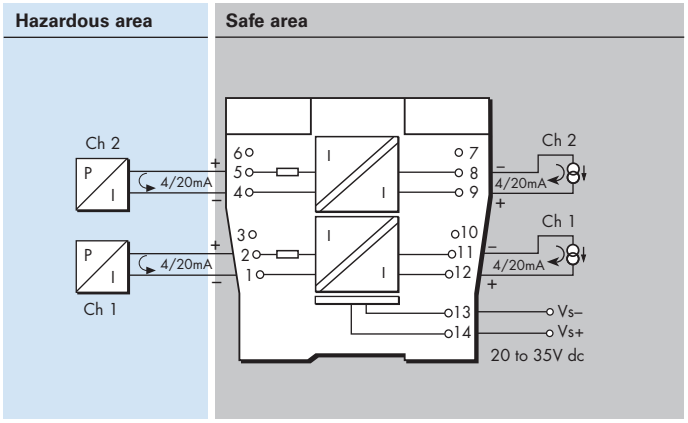

LED indicator
Green: power indication

Maximum current consumption (with 20mA signals into 250Ω load)
70mA at 24V dc

Power dissipation within unit (with 20mA signals into 250Ω load)
1.6W at 24V

Safety description (each channel)
U_o=28V I_o=93mA P_o=0.65W U_m = 253V rms or dc

SIL capable
These models have been assessed for use in IEC 61508 functional safety applications.
SIL2 capable for a single device (HFT=0)
SIL3 capable for multiple devices in safety redundant configurations (HFT=1)
See data on MTL web site and refer to the safety manual.

The given data is only intended as a product description and should not be regarded as a legal warranty of properties or guarantee.
In the interest of further technical developments, we reserve the right to make design changes.

Powering Business Worldwide

Eaton Electric Limited,
Great Marlings, Butterfield, Luton
Beds, LU2 8DL, UK.
Tel: + 44 (0)1582 723633 Fax: + 44 (0)1582 422283
E-mail: mtlenquiry@eaton.com
www.eaton.com

© 2025 Eaton
All Rights Reserved
Publication No.
EPSx549/C/Y Rev6 010916

EUROPE (EMEA):
+44 (0)1582 723633 mtlenquiry@eaton.com
THE AMERICAS:
+1 800 835 7075 mtl-us-info@eaton.com
ASIA-PACIFIC:
+65 6 645 9888 sales.mtlsing@eaton.com

MTL5553
ISOLATOR/ POWER SUPPLY
31.25kbit/s fieldbus

The MTL5553 has been specifically developed to extend 31.25kbit/s (H1) fieldbus networks into hazardous areas. It provides power and communication to devices powered through the signal conductors. For installations in which the safe-area bus length is small an internal terminator can be enabled by a switch on top of the module.

The MTL5553 complies with requirements of Fieldbus Foundation™ specified power supply Type 133† (IS power supply).

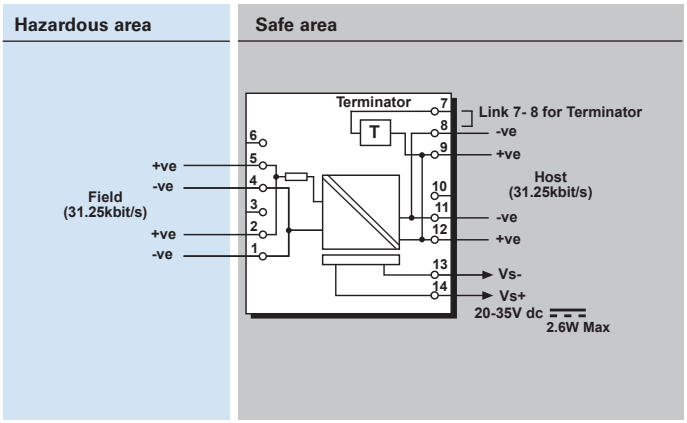

SPECIFICATION

See also common specification

Location of fieldbus device(s)
Zone 0, IIC, T4–6 hazardous area if suitably certified

Hazardous-area fieldbus power supply
18.4V ± 2%
105Ω ±3% dc impedance
80mA maximum current

Maximum cable length
Determined by IS requirements, depending on other devices attached and maximum acceptable voltage drop along cable

Digital signal transmission
Compatible with 31.25kbit/s fieldbus systems and complies with fieldbus standards†

Supply voltage
20 to 35Vdc

LED indicator
Green: one provided for power indication

Power requirement, Vs, with 80mA output load
135mA typical at 24V
105mA at 35V

Power dissipation within unit, with 80mA output load
2.3W typical at 24V
2.6W maximum at 35V

Note: To allow adequate heat dissipation under all likely thermal conditions, it is recommended that MTL5553's are installed on a horizontal DIN-rail mounted on a vertical surface with a 10mm space between adjacent units. MTL MS010 10mm DIN-rail module spacers are available for this purpose.*
** If an MTL5553 is mounted in a non-optimum orientation, the maximum operating temperature is reduced to 45°C.*

Isolation
250V ac between safe- and hazardous-area circuits and power supply

Safety description
Terminals 1 and 2
22V, 102Ω, 216mA; Um = 250V rms or dc

† The applicable fieldbus specifications and standards are: Foundation fieldbus™ 31.25kbit/s Physical Layer Profile Specification, document FF-816, IEC 61158-2: 1993 and ISA-S50.02-1992 for 31.25kbit/s fieldbus systems

Terminal	Function
1	Hazardous-area fieldbus device(s) connection –ve
2	Hazardous-area fieldbus device(s) connection +ve
4	Optional HHC connection –ve
5	Optional HHC connection +ve
7	Link to 8 to enable internal terminator
8 & 11	Safe-area fieldbus device(s) connection –ve
9 & 12	Safe-area fieldbus device(s) connection +ve
13	Supply –ve
14	Supply +ve

Note: To assist the process of terminating cable screens, screw terminals have been provided in terminals 3, 6, and 10. Please note, however, that there is no internal connection for these terminals so they are not earthed.

The given data is only intended as a product description and should not be regarded as a legal warranty of properties or guarantee.
In the interest of further technical developments, we reserve the right to make design changes.

Powering Business Worldwide

Eaton Electric Limited,
Great Marlings, Butterfield, Luton
Beds, LU2 8DL, UK.
Tel: + 44 (0)1582 723633 Fax: + 44 (0)1582 422283
E-mail: mtlenquiry@eaton.com
www.eaton.com

© 2025 Eaton
All Rights Reserved
Publication No.
EPS5553 Rev 2 210622

EUROPE (EMEA):
+44 (0)1582 723633 mtlenquiry@eaton.com
THE AMERICAS:
+1 800 835 7075 mtl-us-info@eaton.com
ASIA-PACIFIC:
+65 6 645 9888 sales.mtlsing@eaton.com

MTL4561 – MTL5561 FIRE AND SMOKE DETECTOR INTERFACE

2-channel

The MTLx561 is a loop-powered 2–channel interface for use with conventional fire and smoke detectors located in hazardous areas. In operation, the triggering of a detector causes a corresponding change in the safe–area current. The unit features reverse input polarity protection.

SPECIFICATION

See also common specification

Number of channels
Two, fully floating, loop powered
Location of fire and smoke detectors
Zone 0, IIC, T4–6 hazardous area if suitably certified
Div. 1, Group A, hazardous area
Input voltage
6 to 30V dc
Current range
1 to 40mA, nominal
Quiescent safe–area current at 20°C
(hazardous–area terminals open circuit)
< 400µA at Vin = 24V per channel
Integral input polarity protection
Input circuit protected against reverse polarity
Minimum output voltage Vout at 20°C
For Vin ≤ 25V: Vout = Vin – (0.38 x current in mA) – 2V
For Vin > 25V: Vout = 22.5V – (0.35 x current in mA)
Maximum output voltage
28V from 300Ω
Transfer accuracy at 20°C
Better than 400µA
Temperature drift
< 4µA/°C (0°C to 60°C)
< 15µA/°C (–20°C to 0°C)
Response time to step input
Settles to within 5% of final value within 1.5ms
Power dissipation within unit
0.7W maximum at 24V with 40mA signal (each channel)
0.9W maximum at 30V with 40mA signal (each channel)
Safety description for each channel
U_o=28V I_o=93mA P_o=0.65W U_m = 253V rms or dc

MTL4561

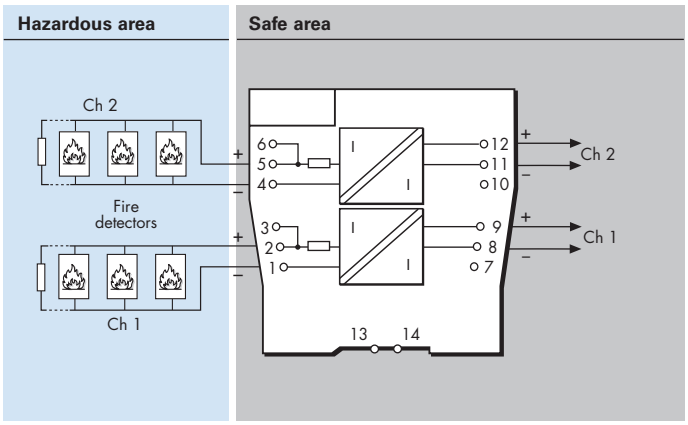

MTL5561

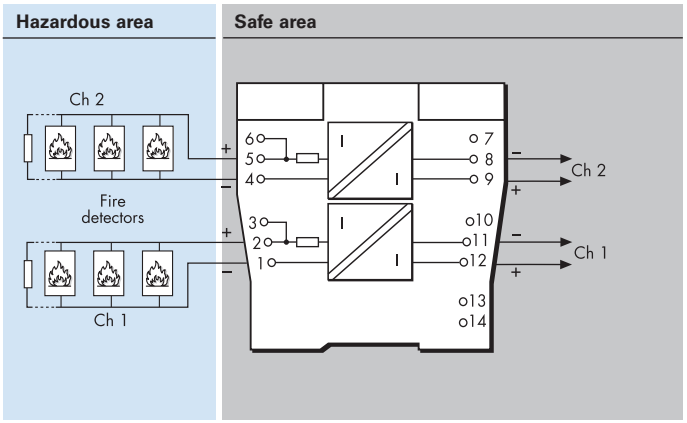

SIL capable
These models have been assessed for use in IEC 61508 functional safety applications.
SIL2 capable for a single device (HFT=0)
See data on MTL web site and refer to the safety manual.

The given data is only intended as a product description and should not be regarded as a legal warranty of properties or guarantee.
In the interest of further technical developments, we reserve the right to make design changes.

Powering Business Worldwide

Eaton Electric Limited,
Great Marlings, Butterfield, Luton
Beds, LU2 8DL, UK.
Tel: + 44 (0)1582 723633 Fax: + 44 (0)1582 422283
E-mail: mtlenquiry@eaton.com
www.eaton.com

© 2025 Eaton
All Rights Reserved
Publication No.
EPSx561 Rev9 120320

EUROPE (EMEA):
+44 (0)1582 723633 mtlenquiry@eaton.com
THE AMERICAS:
+1 800 835 7075 mtl-us-info@eaton.com
ASIA-PACIFIC:
+65 6 645 9888 sales.mtlsing@eaton.com

MTL4573 – MTL5573 TEMPERATURE CONVERTER

THC or RTD input

The MTLx573 converts a low-level dc signal from a temperature sensor mounted in a hazardous area into a 4/20mA current for driving a safe-area load. Software selectable features include linearisation, ranging, monitoring, testing and tagging for all thermocouple types and 2-, 3- or 4-wire RTDs. (For thermocouple applications the HAZ-CJC plug on terminals 1–3 includes an integral CJC sensor). Configuration is carried out using a PCS45 software and PCL45USB configuration cable

SPECIFICATION

See also common specification

Number of channels
One

Location of signal source
Zone 0, IIC, Hazardous area
Division 1, Groups A-D, hazardous location

Signal source

Input	Type		Min. span
THC	J,K,T,E,R,S,B,N	BS EN 60584-1:1996	3mV
	XK	GOST P8.585-2001	
mV	-75 to +75mV		3mV
RTD 2/3/4 wire	Pt100, Pt500, Pt1000	BS EN 60751:2008	10,50,100Ω
	Cu-50, Cu-53	GOST 6651-94	10Ω
	Ni100, Ni500, Ni1000	DIN43760:1985	10,50,100Ω
Resistance	0 to 400Ω		10Ω

RTD excitation current
200µA nominal

Cold junction compensation, THC input
Selectable ON or OFF

Cold junction compensation error
≤ 1.0°C

Common mode rejection
120dB for 240V at 50Hz or 60Hz

Series mode rejection
40dB for 50Hz or 60Hz

Calibration accuracy (at 20°C)
(includes hysteresis, non-linearity and repeatability)

Inputs:
mV/THC: ± 15µV or ± 0.05% of input value (whichever is greater)
Pt 100 - RTD: ± 80mΩ
Output: ± 11µA

Temperature drift (typical)

Inputs:
mV/THC: ± 0.003% of input value/°C
Pt 100 - RTD: ± 7mΩ/°C
Output: ± 0.6µA/°C

Example of calibration accuracy and temperature drift (RTD input)

Span: 250Ω
Accuracy: ± (0.08/250 + 11/16000) x 100% = 0.1% of span
Temperature drift: ± (0.007/250 x 16000 + 0.6) µA/°C = ±1.0µA/°C

Safety drive on sensor failure
Upscale, downscale, or off

MTL4573

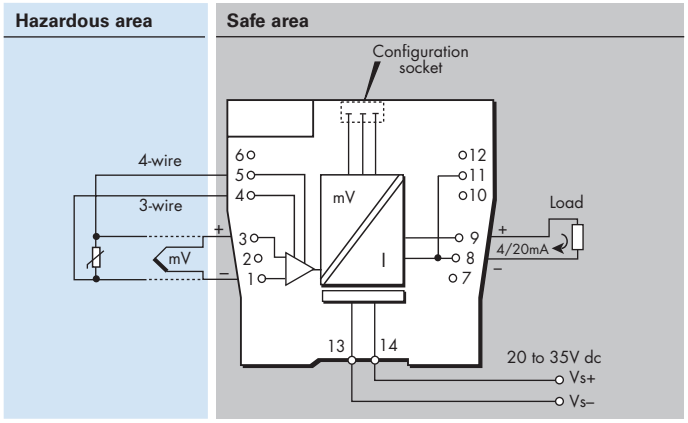

MTL5573

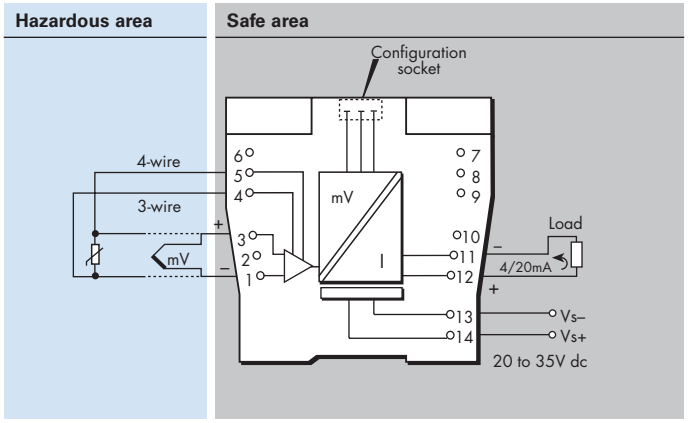

Early burnout
Early burnout detection for thermocouples (when selected)
EBD indicated when loop resistance increase is > 50Ω

Output range
4 to 20mA nominal into 600Ω max.
Out of range characteristic - MTL or NAMUR NE43

Maximum lead resistance (THC)
600Ω with safety drive on sensor failure enabled.
>10kΩ with safety drive on sensor failure disabled

Response time
Typical 500 ms

LED indicator
Green: EBD alarm indication, power and status indication
Yellow: alarm indication

Maximum current consumption (with 20mA signal)
50mA at 24V

Power dissipation within unit (with 20mA signal)
1.2W at 24V

Safety description
Refer to certificate for parameters. U_m=253V rms or dc

Configurator
A personal computer running MTL PCS45 software with a PCL45USB serial interface.

The given data is only intended as a product description and should not be regarded as a legal warranty of properties or guarantee.
In the interest of further technical developments, we reserve the right to make design changes.

Powering Business Worldwide

Eaton Electric Limited,
Great Marlings, Butterfield, Luton
Beds, LU2 8DL, UK.
Tel: + 44 (0)1582 723633 Fax: + 44 (0)1582 422283
E-mail: mtlenquiry@eaton.com
www.eaton.com

© 2025 Eaton
All Rights Reserved
Publication No.
EPSx573 Rev5 230524

EUROPE (EMEA):
+44 (0)1582 723633 mtlenquiry@eaton.com
THE AMERICAS:
+1 800 835 7075 mtl-us-info@eaton.com
ASIA-PACIFIC:
+65 6 645 9888 sales.mtlsing@eaton.com

MTL4575 – MTL5575 TEMPERATURE CONVERTER

THC or RTD input + Alarm

The MTLx575 converts a low-level dc signal from a temperature sensor mounted in a hazardous area into a 4/20mA current for driving a safe-area load. Software selectable features include linearisation, ranging, monitoring, testing and tagging for all thermocouple types and 2-, 3- or 4-wire RTDs. (For thermocouple applications the HAZ-CJC plug on terminals 1–3 includes an integral CJC sensor). Configuration is carried out using a PCS45 software and PCL45USB configuration cable. A single alarm output is provided and may be configured for process alarm or to provide notice of early thermocouple failure.

SPECIFICATION

See also common specification

Number of channels
One

Signal source
THC types J, K, T, E, R, S, B or N to BS 60584 and XK
mV input
RTDs 2/3/4-wire platinum to BS 60751
Pt 100, Pt 500, Pt 1000
Cu-50 & Cu-53
Ni 100/500/1000 DIN 43760

Location of signal source
Zone 0, IIC, T4-6 hazardous area
Division 1, Group A, hazardous location

Input signal range
–75 to +75mV, or 0 to 400Ω (0 to 1000Ω Pt & Ni sensors)

Input signal span
3 to 150mV, or 10 to 400Ω (10 to 1000Ω Pt & Ni sensors)

RTD excitation current
200µA nominal

Cold junction compensation
Automatic or selectable

Cold junction compensation error
≤ 1.0°C

Common mode rejection
120dB for 240V at 50Hz or 60Hz (500ms response)

Series mode rejection
40dB for 50Hz or 60Hz

Calibration accuracy (at 20°C)
(includes hysteresis, non-linearity and repeatability)

Inputs: (500ms response)	
mV/THC:	± 15µV or ± 0.05% of input value (whichever is greater)
RTD:	± 80mΩ
Output:	± 11µA

Temperature drift (typical)

Inputs:	
mV/THC:	± 0.003% of input value/°C
RTD:	± 7mΩ/°C
Output:	± 0.6µA/°C

Example of calibration accuracy and temperature drift (RTD input - 500ms response)

Span:	250Ω
Accuracy:	± (0.08/250 + 11/16000) x 100% = 0.1% of span
Temperature drift:	± (0.007/250 x 16000 + 0.6) µA/°C **= ±1.0µA/°C**

Safety drive on sensor failure
Upscale, downscale, or off

MTL4575

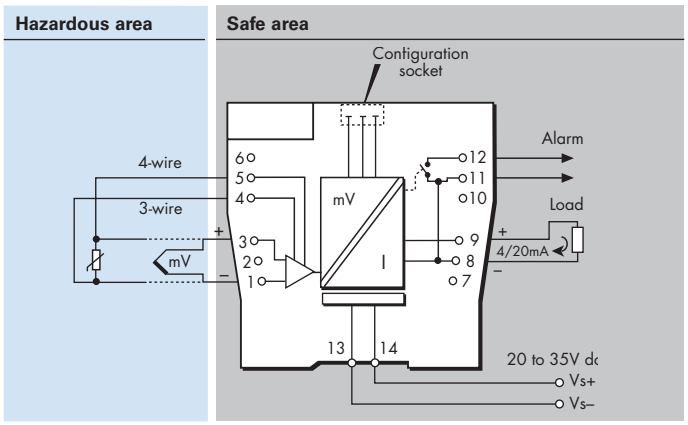

MTL5575

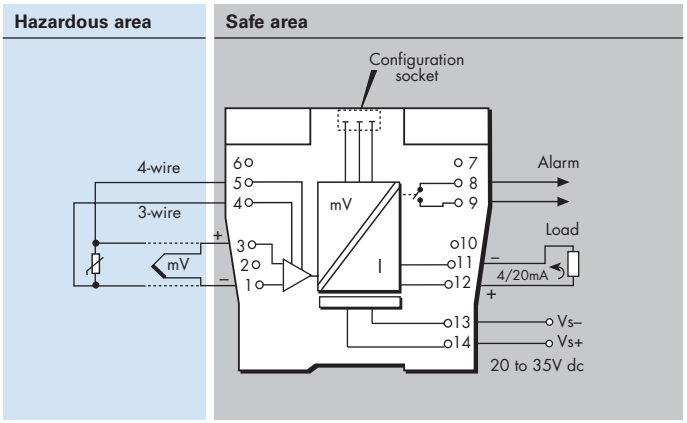

Early burnout
Early burnout detection for thermocouples (when selected)
Alarm trips when loop resistance increase is > 50Ω

Output range
4 to 20mA nominal into 600Ω max.

Alarm output (configurable)
Relay ON in alarm, 250mA @ 35V max

Maximum lead resistance (THC)
600Ω

Response time
Configurable - 500 ms default
(Accuracy at 100/200ms - contact MTL)

LED indicator
Green: power and status indication, EBD alarm indication
Yellow: alarm indication, on when contacts are closed

Maximum current consumption (with 20mA signal)
50mA at 24V

Power dissipation within unit (with 20mA signal)
1.2W at 24V

Safety description
Refer to certificate for parameters. U_m=253V rms or dc

Configurator
A personal computer running MTL PCS45 software with a PCL45USB serial interface.

The given data is only intended as a product description and should not be regarded as a legal warranty of properties or guarantee.
In the interest of further technical developments, we reserve the right to make design changes.

Powering Business Worldwide

Eaton Electric Limited,
Great Marlings, Butterfield, Luton
Beds, LU2 8DL, UK.
Tel: + 44 (0)1582 723633 Fax: + 44 (0)1582 422283
E-mail: mtlenquiry@eaton.com
www.eaton.com

© 2025 Eaton
All Rights Reserved
Publication No.
EPSx575 Rev6 230524

EUROPE (EMEA):
+44 (0)1582 723633 mtlenquiry@eaton.com
THE AMERICAS:
+1 800 835 7075 mtl-us-info@eaton.com
ASIA-PACIFIC:
+65 6 645 9888 sales.mtlsing@eaton.com

MTL4576-RTD – MTL5576-RTD TEMPERATURE CONVERTER

RTD input, 2-channel

The MTLx576–RTD converts signals from resistance temperature detectors (RTDs) mounted in a hazardous area, into 4/20mA currents for driving safe-area loads. Software selectable features include input type and characterisation, ranging, monitoring, testing and tagging. Configuration is carried out using a personal computer. The MTLx576–RTD is compatible with 2– and 3–wire RTD inputs. The MTLx576-RTD can also be configured to drive two safe-area loads from a single input.

SPECIFICATION

See also common specification

Number of channels
Two

Signal source
2-/3-wire RTDs to BS 60751
Pt 100, Pt 500, Pt 1000
Cu-50 & Cu-53
Ni 100/500/1000 DIN 43760

Location of signal source
Zone 0, IIC, T4–6 hazardous area
Division 1, Group A, hazardous location

Input signal range
0 to 400Ω (0 to 4000Ω Pt & Ni sensors)

Input signal span
10 to 400Ω (10 to 1000Ω Pt & Ni sensors)

RTD excitation current
200µA nominal

Common mode rejection
120dB for 240V at 50Hz or 60Hz

Series mode rejection
40dB for 50Hz or 60Hz

Calibration accuracy (at 20°C)
(includes hysteresis, non-linearity and repeatability)

Input:	± 80mΩ
Output:	± 16µA

Temperature drift (typical)

Input:	± 7mΩ/°C
Output:	± 0.6µA/°C

Example of calibration accuracy and temperature drift (RTD input)

Span:	250Ω
Accuracy:	± (0.08/250 + 16/16000) x 100% = 0.13% of span
Temperature drift:	± (0.007/250 x 16000 + 0.6) µA/°C = ±1.0µA/°C

Safety drive on sensor failure
Upscale, downscale, or off

Output range
4 to 20mA nominal into 300Ω max.

Response time
Configurable - 500 ms default
(Accuracy at 100/200ms - contact MTL)

MTL4576-RTD

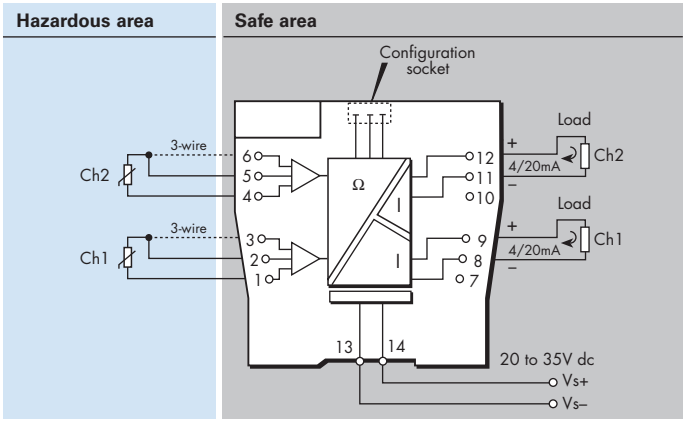

MTL5576-RTD

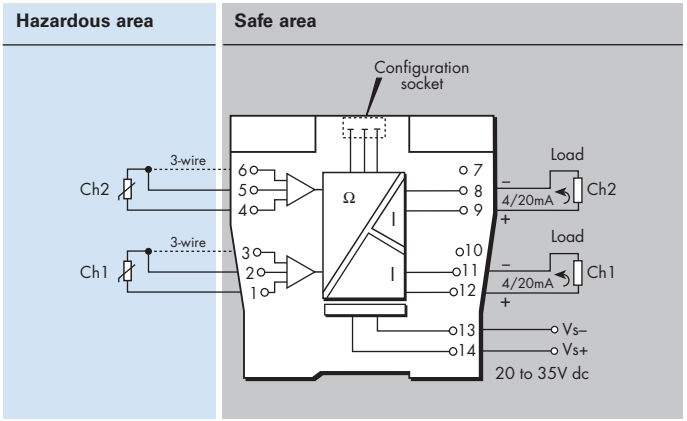

LED indicator
Green: power and status indication
Yellow: one provided for channel status
Red: alarm indication

Power requirement, Vs with 20mA signal
60mA at 24V

Power dissipation within unit with 20mA signal
1.4W at 24V

Safety description
Refer to certificate for parameters. U_m=253V rms or dc

Configurator
A personal computer running MTL PCS45 software with a PCL45USB serial interface.

The given data is only intended as a product description and should not be regarded as a legal warranty of properties or guarantee.
In the interest of further technical developments, we reserve the right to make design changes.

Powering Business Worldwide

Eaton Electric Limited,
Great Marlings, Butterfield, Luton
Beds, LU2 8DL, UK.
Tel: + 44 (0)1582 723633 Fax: + 44 (0)1582 422283
E-mail: mtlenquiry@eaton.com
www.eaton.com

© 2025 Eaton
All Rights Reserved
Publication No.
EPSx576R Rev6 230524

EUROPE (EMEA):
+44 (0)1582 723633 mtlenquiry@eaton.com
THE AMERICAS:
+1 800 835 7075 mtl-us-info@eaton.com
ASIA-PACIFIC:
+65 6 645 9888 sales.mtlsing@eaton.com

MTL4576-THC – MTL5576-THC TEMPERATURE CONVERTER

mV/THC input, 2-channel

The MTLx576–THC converts low–level dc signals from temperature sensors mounted in a hazardous–area into 4/20mA currents for driving safe–-area loads. Software selectable features include linearisation for standard thermocouple types, ranging, monitoring, testing and tagging. Configuration is carried out using a personal computer. The hazardous–area connections include cold–junction compensation and do not need to be ordered separately.

SPECIFICATION

See also common specification

Number of channels
Two

Signal source
THC types J, K, T, E, R, S, B or N to BS 60584 and XK
mV input

Location of signal source
Zone 0, IIC, T4–6 hazardous area
Division 1, Group A, hazardous location

Input signal range
–75 to +75mV

Input signal span
3 to 150mV

Cold junction compensation
Automatic or selectable

Cold junction compensation error
≤ 1.0°C

Common mode rejection
120dB for 240V at 50Hz or 60Hz

Series mode rejection
40dB for 50Hz or 60Hz

Calibration accuracy (at 20°C)
(includes hysteresis, non-linearity and repeatability)

Input:	±15µV or ±0.05% of input value (whichever is greater)
Output:	±16µA

Temperature drift (typical)

Input:	±0.003% of input value/°C
Output:	±0.6µA/°C

Safety drive on sensor burnout
Upscale, downscale, or off

Output range
4 to 20mA nominal into 300Ω max.

Maximum lead resistance
300Ω with safety drive on sensor failure enabled
>10kΩ with safety drive on sensor failure disabled

Response time
Configurable - 500 ms default
(Accuracy at 100/200ms - contact Eaton's MTL product line)

MTL4576-THC

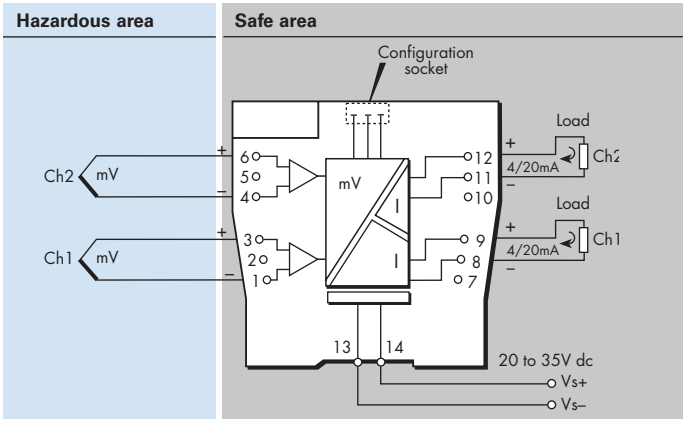

MTL5576-THC

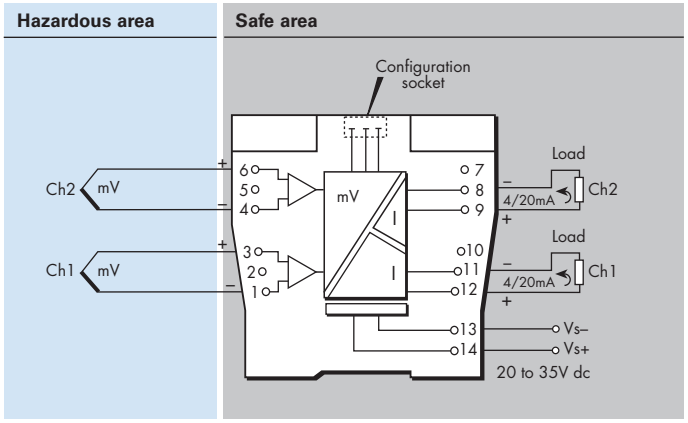

LED indicator
Green: power and status indication
Yellow: one provided for channel status
Red: alarm indication

Power requirement, Vs with 20mA signal
60mA at 24V

Power dissipation within unit with 20mA signal
1.4W at 24V

Safety description
Refer to certificate for parameters. Um=253V rms or dc

Configurator
A personal computer running MTL PCS45 software with a PCL45USB serial interface.

The given data is only intended as a product description and should not be regarded as a legal warranty of properties or guarantee.
In the interest of further technical developments, we reserve the right to make design changes.

Eaton Electric Limited,
Great Marlings, Butterfield, Luton
Beds, LU2 8DL, UK.
Tel: + 44 (0)1582 723633 Fax: + 44 (0)1582 422283
E-mail: mtlenquiry@eaton.com
www.eaton.com

© 2025 Eaton
All Rights Reserved
Publication No.
EPSx576T Rev6 230524

EUROPE (EMEA):
+44 (0)1582 723633 mtlenquiry@eaton.com
THE AMERICAS:
+1 800 835 7075 mtl-us-info@eaton.com
ASIA-PACIFIC:
+65 6 645 9888 sales.mtlsing@eaton.com

MTL4581 – MTL5581 MILLIVOLT/THERMOCOUPLE ISOLATOR

for low-level signals

The MTLx581 takes a low-level dc signal from a voltage source in a hazardous area, isolates it, and passes it to a receiving instrument located in the safe area. The module is intended for use with thermocouples utilising external cold-junction compensation. A switch enables or disables the safety drive in the event of thermocouple burnout or cable breakage; a second switch permits the selection of upscale or downscale operation as appropriate.

SPECIFICATION

See also common specification

Number of channels
One

Signal source
Any dc millivolt source, THC types J, K, T, E, R, S, B or N to BS 60584 and XK

Location of millivolt source
Zone 0, IIC, T4–T6 hazardous area if suitably certified
Div. 1, Group A, hazardous location

Input and output signal range
0 to ± 50mV, overrange to ± 55mV
Maximum lead resistance 600Ω

Output resistance
60Ω nominal

Transfer accuracy@20°C
Linearity and repeatability < 0.05% of reading or ± 5μV, whichever is the greater

Temperature drift
< 2μV/°C, maximum

Response time
Settles to within 10% of final value within 150μs

Frequency response
dc to 4kHz nominal

Safety drive on THC burnout
Two switches enable or disable the safety drive and select upscale or downscale operation

MTL4581

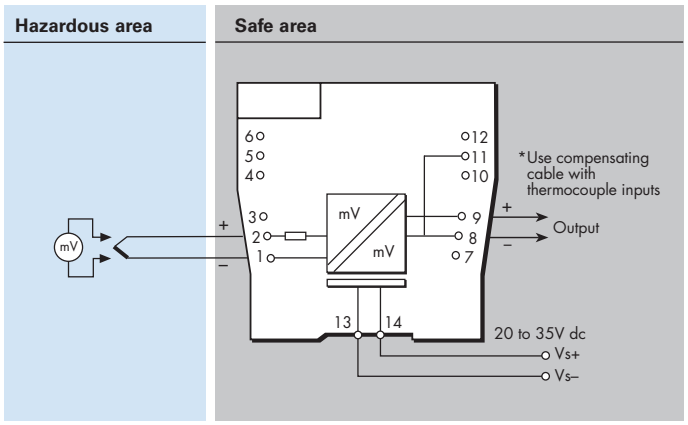

MTL5581

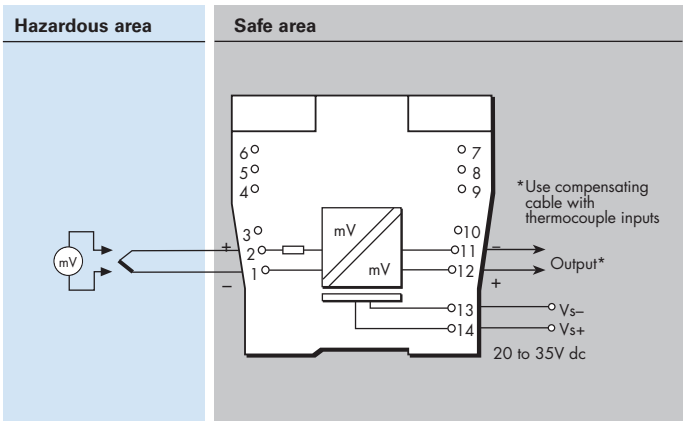

LED indicator
Green: power indication

Power requirement, Vs
30mA max, 20V dc to 35V dc

Power dissipation within unit
0.7W typical at 24V
0.91W at 35V

Safety description
Terminals 1 to 2
Non-energy-storing apparatus ≤ 1.5V, ≤ 0.1A and ≤ 25mW; can be connected without further certification into any IS loop with an open-circuit voltage <28V

The given data is only intended as a product description and should not be regarded as a legal warranty of properties or guarantee.
In the interest of further technical developments, we reserve the right to make design changes.

Powering Business Worldwide

Eaton Electric Limited,
Great Marlings, Butterfield, Luton
Beds, LU2 8DL, UK.
Tel: + 44 (0)1582 723633 Fax: + 44 (0)1582 422283
E-mail: mtlenquiry@eaton.com
www.eaton.com

© 2025 Eaton
All Rights Reserved
Publication No.
EPSx581 Rev5 230524

EUROPE (EMEA):
+44 (0)1582 723633 mtlenquiry@eaton.com
THE AMERICAS:
+1 800 835 7075 mtl-us-info@eaton.com
ASIA-PACIFIC:
+65 6 645 9888 sales.mtlsing@eaton.com

MTL4582B - MTL5582B RESISTANCE ISOLATOR

to repeat RTD signals

The MTLx582B connects to a 2-, 3-, or 4-wire resistance temperature device (RTD) or other resistance located in a hazardous area, isolates it and repeats the resistance to a monitoring system in the safe area. The module is intended typically (but not exclusively) for use with Pt100 3-wire RTDs. Switches enable selection of 2-, 3-, or 4-wire RTD connection. The MTLx582B should be considered as an alternative, non-configurable to MTLx575, for use in RTD applications where a resistance input is preferred or needed instead of 4/20mA. The design is notable for its ease of use and repeatability. The number of wires which can be connected on the safe-area side of the unit is independent of the number of wires which can be connected on the hazardous-area side. The module drives upscale in the case of open circuit detection.

SPECIFICATION

See also common specification

Number of channels
One

Location of RTD
Zone 0, IIC, T4 hazardous area
Div. 1, Group A, hazardous location

Resistance source
2-, 3-, or 4-wire* RTDs to BS 1904/DIN 43760 (100Ω at 0°C)
*user selectable by switches (factory set for 3-wire)

Resistance range
10Ω to 400Ω

RTD excitation current
200µA nominal

Output configuration
2, 3 or 4 wires (independent of mode selected for hazardous area terminals)

Output range
10Ω to 400Ω (from a 100µA to 5mA source)

Temperature drift
±10mΩ/°C typical (0.01%/°C @ 100Ω)

Response time
To within 4% of final value within 1s

Safety drive on open-circuit sensor
Upscale to 420Ω nominal

Transfer accuracy@20°C
<0.15Ω at excitation current 1 - 5mA
<0.25Ω at excitation current 0.5 - 1mA

MTL4582B

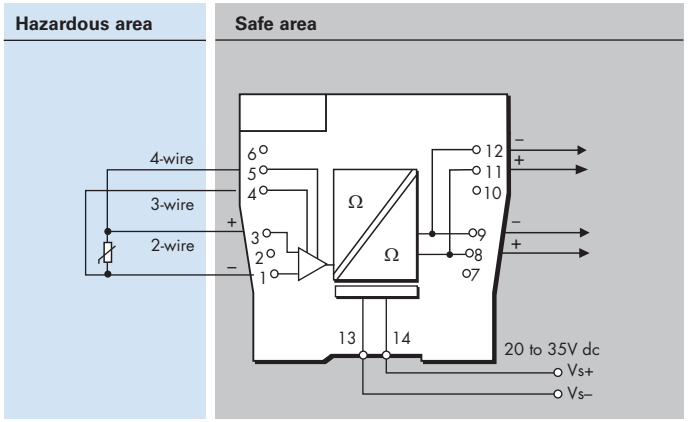

MTL5582B

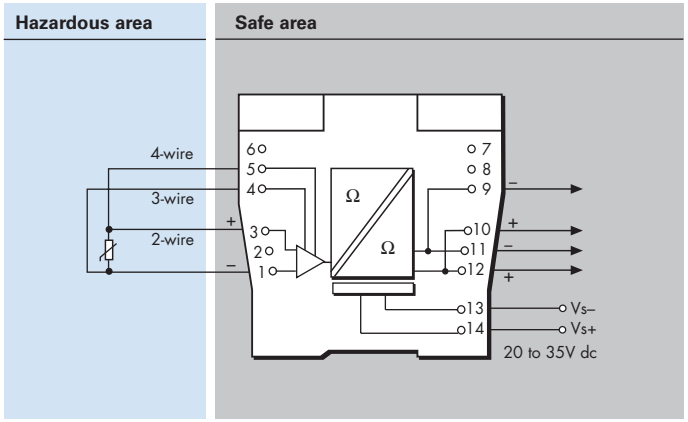

LED indicator
Green: power indication

Power requirements, Vs
33mA at 24V
35mA at 20V
28mA at 35V

Maximum power dissipation within unit
0.8W at 24V
1.0W at 35V

Safety description
Terminals 1 and 3
U_o = 1.2V I_o = 4mA P_o = 1.2mW U_m = 253V rms or dc
Non-energy-storing apparatus ≤ 1.5V, ≤ 0.1A, ≤ 25mW; can be connected without further certification into any IS loop with an open circuit voltage < 5V.
Terminals 1, 3, 4 and 5
U_o = 6.51V I_o = 10mA P_o = 17mW

The given data is only intended as a product description and should not be regarded as a legal warranty of properties or guarantee.
In the interest of further technical developments, we reserve the right to make design changes.

Powering Business Worldwide

Eaton Electric Limited,
Great Marlings, Butterfield, Luton
Beds, LU2 8DL, UK.
Tel: + 44 (0)1582 723633 Fax: + 44 (0)1582 422283
E-mail: mtlenquiry@eaton.com
www.eaton.com

© 2025 Eaton
All Rights Reserved
Publication No.
EPSx582B Rev4 230524

EUROPE (EMEA):
+44 (0)1582 723633 mtlenquiry@eaton.com
THE AMERICAS:
+1 800 835 7075 mtl-us-info@eaton.com
ASIA-PACIFIC:
+65 6 645 9888 sales.mtlsing@eaton.com

MTL4599 - MTL5599 DUMMY ISOLATOR

The primary function of the MTLx599, which can be used with all other MTLx500 range of units, is to provide termination and earthing facilities for unused cable cores from hazardous areas.

SPECIFICATION

See also common specification

Weight
60g

MTL4599

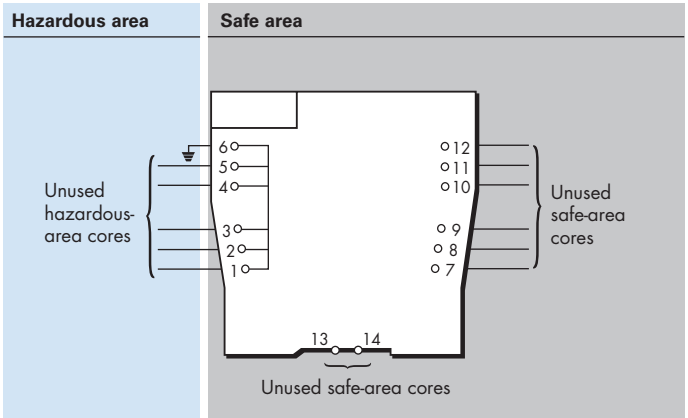

MTL5599

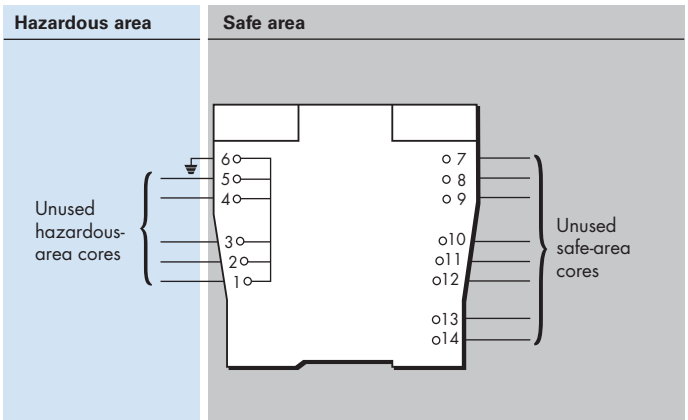

MTL4599N GENERAL PURPOSE FEED-THROUGH MODULE

The feed–through termination module allows non–IS connections to the MTL4500 backplanes. The wires from the field are connected using screw terminals. Six terminals are provided on top of the module and linked down to the multiway connector on the backplane. The terminals and cables conform to IS regulations so that non–IS and IS signals can be mixed on the same backplane.

Note: Must not be used with signals >50V or >0.25A

SPECIFICATION

See also common specification

Weight
60g

MTL4599N

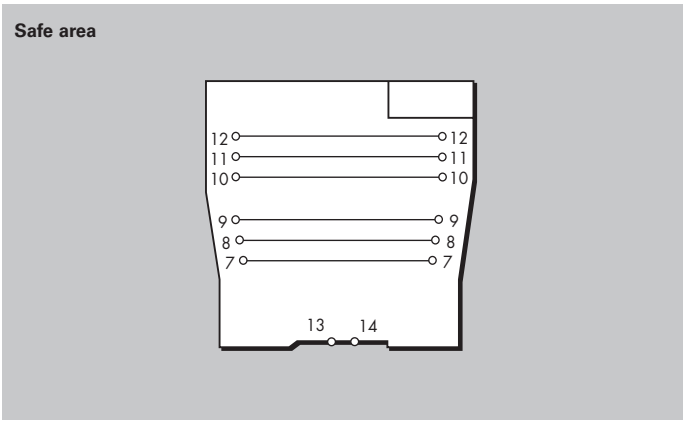

The given data is only intended as a product description and should not be regarded as a legal warranty of properties or guarantee.
In the interest of further technical developments, we reserve the right to make design changes.

Eaton Electric Limited,
Great Marlings, Butterfield, Luton
Beds, LU2 8DL, UK.
Tel: + 44 (0)1582 723633 Fax: + 44 (0)1582 422283
E-mail: mtlenquiry@eaton.com
www.eaton.com

© 2025 Eaton
All Rights Reserved
Publication No.
EPSx599/N Rev4 010916

EUROPE (EMEA):
+44 (0)1582 723633 mtlenquiry@eaton.com
THE AMERICAS:
+1 800 835 7075 mtl-us-info@eaton.com
ASIA-PACIFIC:
+65 6 645 9888 sales.mtlsing@eaton.com

MTL4500 - MTL5500 RANGE COMMON SPECIFICATIONS

Please go to our website at www.eaton.com for the latest information regarding safety approvals, certificates and entity parameters.

Connectors
Each unit is supplied with signal connectors, as applicable. When using crimp ferrules for the hazardous or non-hazardous (safe) signal connectors the metal tube length should be 12mm and the wire trim length 14mm.

Isolation
250V rms, tested at 1500V rms minimum, between safe- and hazardous-area terminals.
MTL4500: 50V between safe-area circuits and power supply
MTL5500: 250V rms between safe-area circuits and power supply

Supply voltage
20 – 35V dc

Location of units
Safe area

Terminals
Accepts conductors of up to 2.5mm^2 stranded or single-core

Mounting
MTL4500
MTL4500 range of backplanes
MTL5500
T-section 35mm DIN rail (7.5 or 15mm) to EN 50022

Ambient temperature limits
–20 to +60°C (–6 to +140°F) operating
–40 to +80°C (–40 to +176°F) storage

Humidity
5 to 95% relative humidity

Weight
Approximate (except where indicated)

MTL4500	140g
MTL5500	150g

EMC
To EN61326 and NE21*

** For 20ms power interruption compliance, a suitable power supply must be used.*

HART® is a registered trademark of HART Communication Foundation

DIMENSIONS (MM)

MTL4500

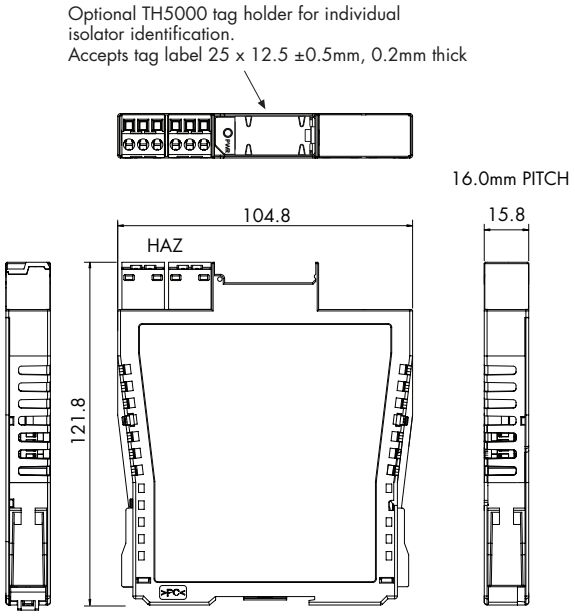

MTL5500

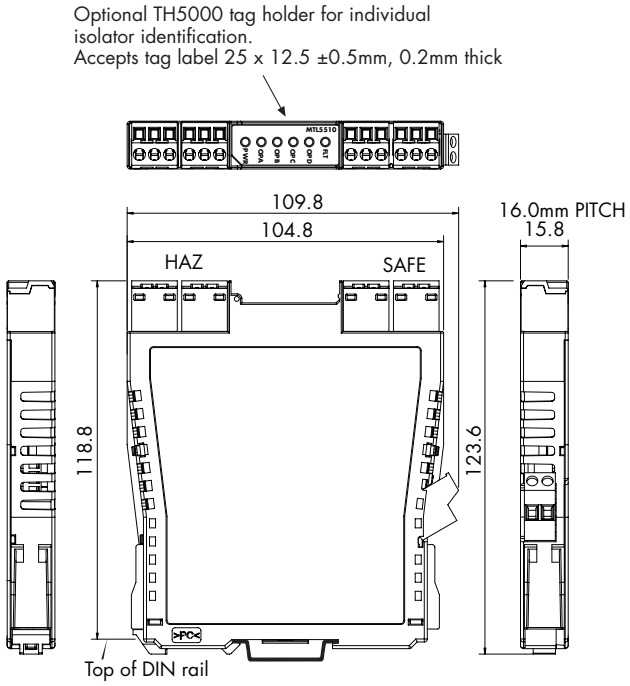

The given data is only intended as a product description and should not be regarded as a legal warranty of properties or guarantee.
In the interest of further technical developments, we reserve the right to make design changes.

Eaton Electric Limited,
Great Marlings, Butterfield, Luton
Beds, LU2 8DL, UK.
Tel: + 44 (0)1582 723633 Fax: + 44 (0)1582 422283
E-mail: mtlenquiry@eaton.com
www.eaton.com

© 2025 Eaton
All Rights Reserved
Publication No.
EPSx5CS Rev5 230524

EUROPE (EMEA):
+44 (0)1582 723633 mtlenquiry@eaton.com
THE AMERICAS:
+1 800 835 7075 mtl-us-info@eaton.com
ASIA-PACIFIC:
+65 6 645 9888 sales.mtlsing@eaton.com

MPA5500
A.C. POWER ADAPTOR

The MPA5500 enables any MTL5500 module that is normally powered from a nominal 24V DC supply (i.e. those that are not loop-powered) to be powered from a high-voltage AC supply.

It plugs into the power socket (terminals 13 and 14) of an MTL5500 module and clips securely onto the module housing. The 25V DC power output from the adaptor is sufficient to supply a single module and can be connected to any normal AC power source.

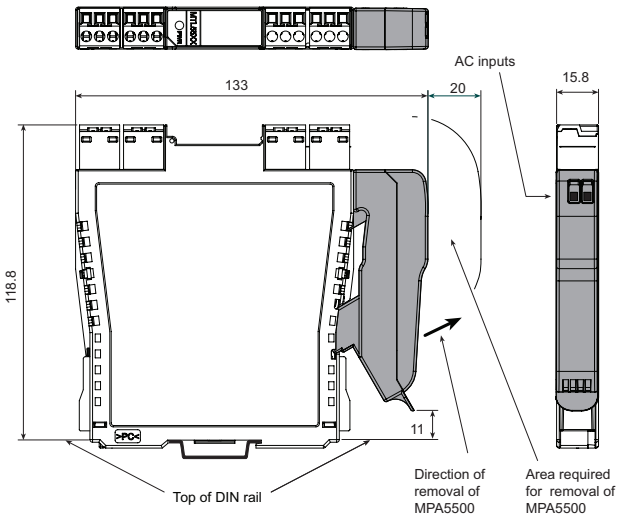

SPECIFICATION

Input voltage
85 – 265V AC, (45–65Hz)

Efficiency
71% typ. at 230V AC

Power dissipation
1.2W typ at 230V AC.

Input terminals
Cage-clamp terminals accommodating conductors up to 1.5mm^2 stranded or 16AWG single-core

Input protection
internal fuse, not user serviceable

Output voltage
25Vdc ± 10%

Output current
120mA at 25V

Ambient temperature
Operating: –20 to +60°C
Storage: –40 to +80°C

Mounting
Plugs into and clips onto MTL5500 range I/O module
It is not for use with any equipment other than MTL5500.

Humidity
5 to 95% relative humidity

Mechanical
Ingress Protection: IP20
Material: polycarbonate
Weight: 28g approx.

Standards compliance
EN 61326, EN 61010

PCS45/PCL45USB CONFIGURATOR FOR MTL CONVERTERS

The PCS45/PCL45USB configurator allows MTL temperature converters and pulse isolators to be configured from a standard PC running a Microsoft® Windows® operating system. It comprises PC software (PCS45),which is available to download, free of charge, on the web and a IS certified interfacing link. Converters can be configured from the safe area, while on-line, and configurations can be saved to disk and printed out when required. It is suitable for use with MTL4500, and MTL5500 range of products.

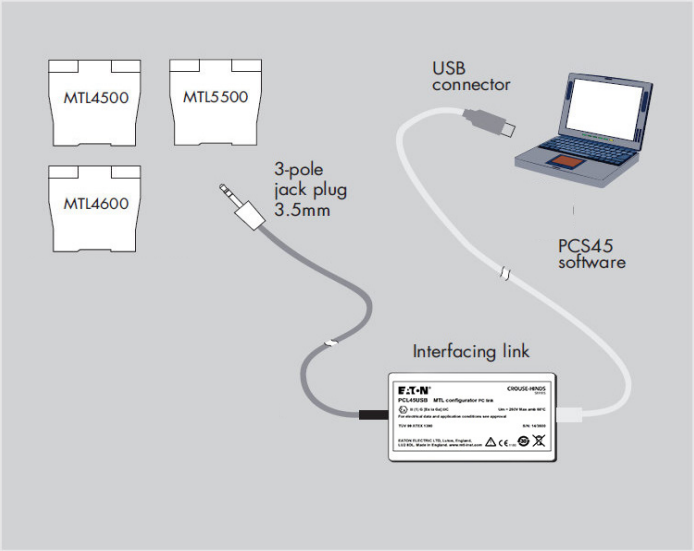

SPECIFICATION

PCL45USB hardware

Location
Safe area

Connections
PC side: USB B(F) socket
Converter side: cable with 3.5mm jackplug, 3-pole for MTL4500 and MTL5500 range of converters. An adapter cable is provided for other earlier MTL converters.

Cable lengths
Converter side (fitted): 1.5m
USB cable A(M) to B(M) (supplied): 2m

Ambient temperature limits
–10°C to +60°C operating
–20°C to +70°C storage

Humidity
5 to 95% relative humidity (non-condensing)

Weight
200g

PCS45 Configuration software
The software requires only approximately 20Mb of hard disk space and is compatible with all versions of Windows.

Software medium
Available to download, free of charge on the https://www.eaton.com/content/dam/eaton/products/process-safety-automation-test-and-measurement/crouse-hinds/compressed-files/crouse-hinds-mtl-PCS45-PCL45USB-configuration-software.zip

Recommended minimum PC configuration
20MB of available hard disc space
Available USB port
Printer (local or network)

The given data is only intended as a product description and should not be regarded as a legal warranty of properties or guarantee.
In the interest of further technical developments, we reserve the right to make design changes.

Powering Business Worldwide

Eaton Electric Limited,
Great Marlings, Butterfield, Luton
Beds, LU2 8DL, UK.
Tel: + 44 (0)1582 723633 Fax: + 44 (0)1582 422283
E-mail: mtlenquiry@eaton.com
www.eaton.com

© 2025 Eaton
All Rights Reserved
Publication No.
EPS45/5500 Rev 17 080425

EUROPE (EMEA):
+44 (0)1582 723633 mtlenquiry@eaton.com
THE AMERICAS:
+1 800 835 7075 mtl-us-info@eaton.com
ASIA-PACIFIC:
+65 6 645 9888 sales.mtlsing@eaton.com

PSG60E24RM
24V 2.5A PSU
24Vdc Power supply, DIN rail mounting,mains input.

A general purpose 24V dc power supply for use with MTL isolator and barrier product ranges. Single 24V output with adjustable voltage andstatus indication.

For mounting on 35mm top hat DIN rail.
(replacement for MTL5991).

Function	Terminals
Mains input line	L
Mains input neutral	N
Earth	E
24V dc+	+
24Vdc	-

SPECIFICATION See also common specification

AC input range
85Vac to 264Vac, 47 to 63Hz
DC input range
120Vdc to 375Vdc
DC output
24V (adjustable 24-28V)
Output current
2.5A (3,75A for 5s)
Main interruption holdup time
>20ms
Efficiency
90%
Input to Output isolation
4kVac
Isolation Input/output to ground
1.5kVac
Housing material
Aluminium
Dimensions L x W x H
121 x 32 x 125mm
Weight
370g
Wire size
0.3 to 3.3mm2, AWG 22-12 with removable terminals
Operating Temperature
-20°C to +80°C
Storage Temperature
-25°C to +85°C

MTL5500 RANGE POWERBUS KITS
PB - 8T,16T,24T,32T

A quick and easy way to distribute DC power to MTL5500 range modules. Each powerbus kit includes 4 single ferrules, 4 twin ferrules and 2 insulation displacement connectors (Scotchlok).

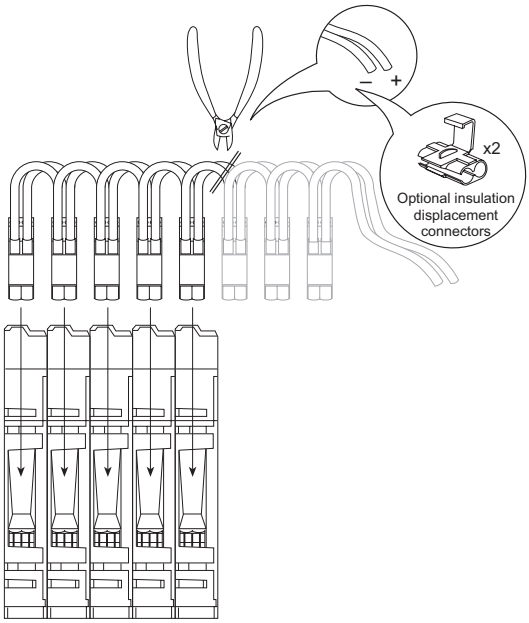

SPECIFICATION

Available in 4 different lengths:

PB - 8T	= 8 connectors and loops
PB - 16T	= 16 connectors and loops
PB - 24T	= 24 connectors and loops
PB - 32T	= 32 connectors and loops

Insulation material :
PVC
Conductor :
24 strands of 0.2mm dia (0.75mm^2) standard copper
Insulation thickness :
0.5 to 0.8 mm
Current rating :
12A max
Operating temperature range :
–20°C to +60°C
Max voltage drop on 32 modules drawing 130mA max :
0.5V

CHOOSING A POWERBUS KIT

Choose a powerbus where the number of power plugs is greater than or equal to the number of isolators to be powered and if necessary cut the powerbus to the required number of terminations.

Note: To reduce the risk of excessive voltage drop or overcurrent do not connect powerbuses in series.

The given data is only intended as a product description and should not be regarded as a legal warranty of properties or guarantee.
In the interest of further technical developments, we reserve the right to make design changes.

Powering Business Worldwide

Eaton Electric Limited,
Great Marlings, Butterfield, Luton
Beds, LU2 8DL, UK.
Tel: + 44 (0)1582 723633 Fax: + 44 (0)1582 422283
E-mail: mtlenquiry@eaton.com
www.eaton.com

© 2025 Eaton
All Rights Reserved
Publication No.
EPS45/5500 Rev 17 080425

EUROPE (EMEA):
+44 (0)1582 723633 mtlenquiry@eaton.com
THE AMERICAS:
+1 800 835 7075 mtl-us-info@eaton.com
ASIA-PACIFIC:
+65 6 645 9888 sales.mtlsing@eaton.com

MTL5500 RANGE ENCLOSURES

DIMENSIONS (mm) AND MOUNTING

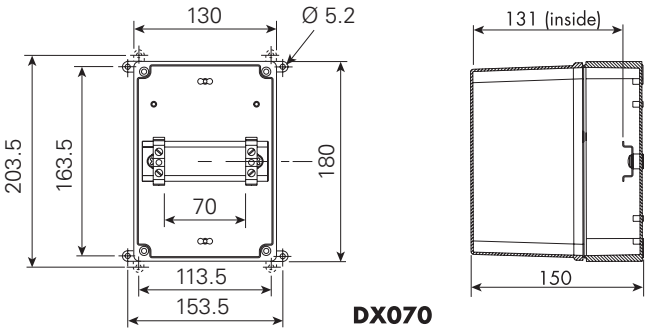

DX070

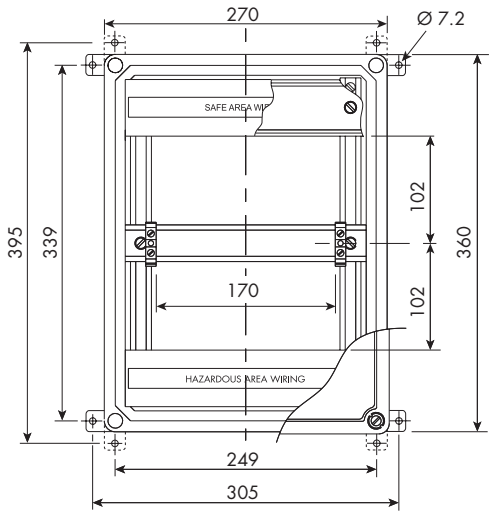

DX170

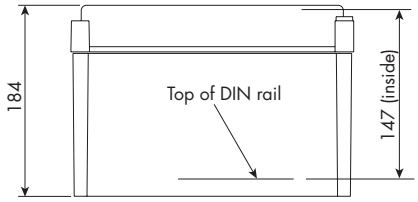

SPECIFICATION

Construction
Glass reinforced polycarbonate base - DX070
Glass reinforced polyester base - DX170
Transparent polycarbonate lid

Protection
Dust-tight and water-jet proof to IEC529:IP65

Lid fixing
Captive fixing screws

Weight (excluding barriers/isolators) kg

DX070	0.8
DX170	2.6

Items provided
DIN rail - fitted
ETL7000 Earth terminals (2 x) - fitted
"Take care IS" front adhesive label
Cable trunking (DX170 only)

Note: Isolators are not included.

Mounting
Wall fixing lugs provided. For further details refer to INM5500.

Tagging and earth rail
Accommodates MTL5500 range of accessories.

Permitted location
Safe (non-hazardous) area

Note: N. America/Canada - Enclosures are rated NEMA 4X so can be used in Class 1, Division 2 (gases) location, but check with local requirements and ensure all cable entries also conform. Additional warning label will be required on or near the enclosure, see installation details. Not suitable for Class II or III, Division 2 hazardous locations.

Approximate capacities (on DIN rail between earth terminals)

	Number of MTL5500 isolators	
DX070	4	(2)*
DX170	10	(8)*

**** Use these figures when IMB57 mounting blocks for tagging/earth are included.***

Ambient temperature limits
Dependent on units fitted. See instruction manual INM5500.

The given data is only intended as a product description and should not be regarded as a legal warranty of properties or guarantee.
In the interest of further technical developments, we reserve the right to make design changes.

Powering Business Worldwide

Eaton Electric Limited,
Great Marlings, Butterfield, Luton
Beds, LU2 8DL, UK.
Tel: + 44 (0)1582 723633 Fax: + 44 (0)1582 422283
E-mail: mtlenquiry@eaton.com
www.eaton.com

© 2025 Eaton
All Rights Reserved
Publication No.
EPS45/5500 Rev 17 080425

EUROPE (EMEA):
+44 (0)1582 723633 mtlenquiry@eaton.com
THE AMERICAS:
+1 800 835 7075 mtl-us-info@eaton.com
ASIA-PACIFIC:
+65 6 645 9888 sales.mtlsing@eaton.com

MTL5500 RANGE ACCESSORIES

MTL5500 range of isolators mount quickly and easily onto standard DIN rail. A comprehensive range of accessories simplifies earthing and tagging arrangements.

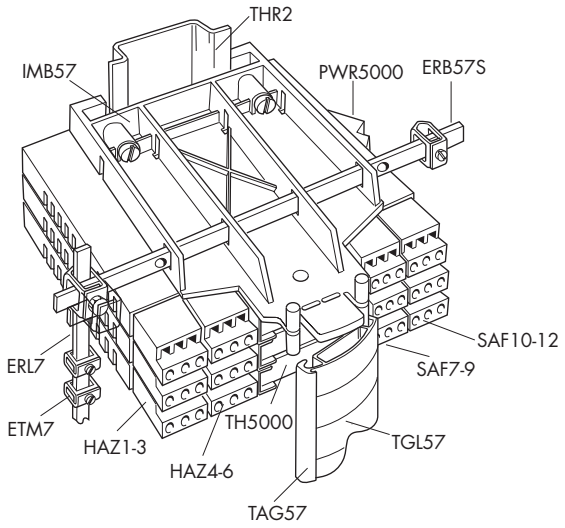

MOUNTING

THR2 DIN rail,1m length

DIN rail to EN50022; BS5584; DIN46277

MS010 DIN rail module spacer, 10mm, pack of 5

Grey spacer, one required between each MTL5533 or MTL5995-PS and any adjacent module on a DIN rail, to provide 10mm air-circulation space between modules

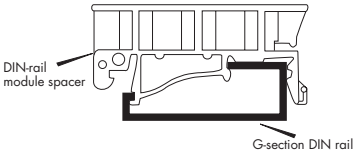

EARTH RAILS AND TAG STRIP

IMB57 Insulating mounting block

One required at each end of a tagging strip/earth rail. Suitable for low-profile (7.5mm) and high-profile (15mm) symmetrical DIN rail.

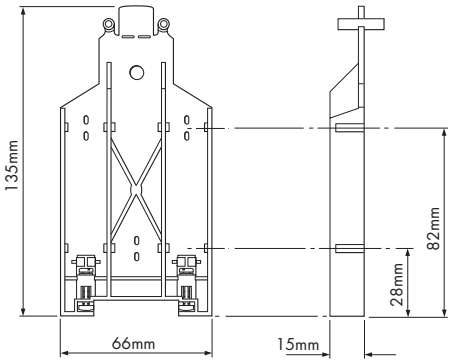

ERB57S Earth-rail bracket, straight

Nickel-plated; supplied with two push fasteners, one (14mm, 35mm^2) earth-rail clamp and one (10mm, 16mm^2) earth clamp.

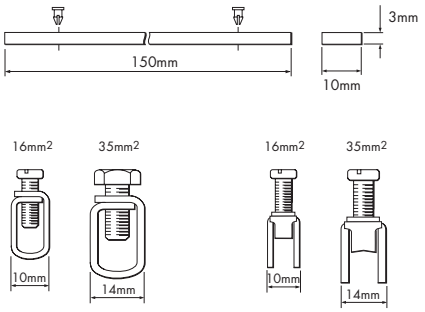

ERL7 Earth rail, 1m length

Nickel-plated; may be cut to length.

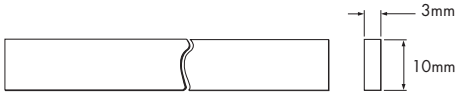

ETM7 Earth terminal, bag of 50

For terminating cable screens and 0V returns on the ERL7 earth rail. For cables ≤ 4mm^2. Exact dimension dependent on manufacturer.

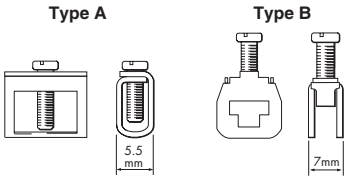

TAG57 Tagging strip, 1m length

Cut to size. Supplied with tagging strip label suitable for MTL5000 or MTL5500 modules.

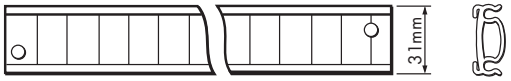

TGL57 Tagging strip labels, set of 10 x 0.5m

Spares replacement, for use with TAG57 tagging strip. Suitable for MTL5000 or MTL5500 modules.

INDIVIDUAL ISOLATOR IDENTIFICATION

TH5000 tag holders

Each isolator may be fitted with a clear plastic tag holder, as shown below. Order TH5000, pack of 20.

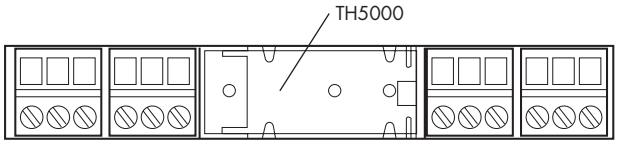

CONNECTORS

Each MTL5500 unit is supplied with signal and power connectors, as applicable.

Spares replacement connectors are available separately; see ordering information.

See also

'MTL5500 range of powerbus kits'

The given data is only intended as a product description and should not be regarded as a legal warranty of properties or guarantee.
In the interest of further technical developments, we reserve the right to make design changes.

Powering Business Worldwide

Eaton Electric Limited,
Great Marlings, Butterfield, Luton
Beds, LU2 8DL, UK.
Tel: + 44 (0)1582 723633 Fax: + 44 (0)1582 422283
E-mail: mtlenquiry@eaton.com
www.eaton.com

© 2025 Eaton
All Rights Reserved
Publication No.
EPS45/5500 Rev 17 080425

EUROPE (EMEA):
+44 (0)1582 723633 mtlenquiry@eaton.com
THE AMERICAS:
+1 800 835 7075 mtl-us-info@eaton.com
ASIA-PACIFIC:
+65 6 645 9888 sales.mtlsing@eaton.com

CUSTOM, STANDARD AND UNIVERSAL BACKPLANES FOR EASY DCS INTEGRATION

- Total flexibility
- Reduce wiring
- Simplify installation
- Special functions
- Signal conditioning
- HART® integration

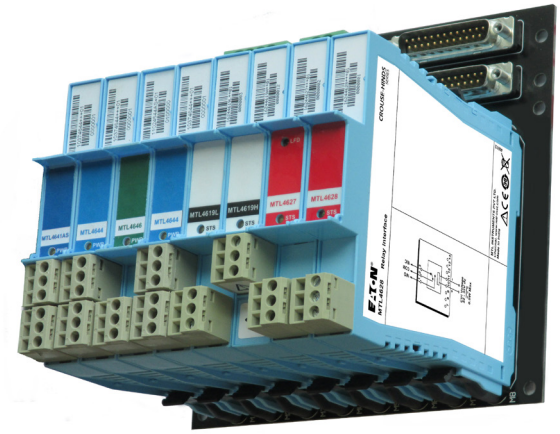

The MTL4500/MTL4600 range of backplanes, enclosures and other accessories provide comprehensive, flexible and remarkably compact mounting facilities for system vendors, original equipment manufacturers and end users alike.

CUSTOMISED BACKPLANES

Eaton provides a complete design and manufacturing service for MTL customised backplanes. Customised backplanes give the vendors and users of process control and safety systems the opportunity to integrate MTL4500/MTL4600/HART® modules directly into their system architecture. As there are no hazardous-area circuits on the backplanes, customised versions can be produced without the need for IS certification, so simplifying design and lowering costs.

UNIVERSAL CUSTOM BACKPLANES

The 'universal' backplane allows a fast and economic approach to providing a custom interface. Where tight time schedules exist, the backplane can be installed to allow the panel building and wiring to be completed. The customised adapter card can then be plugged in at any time up to integrated test.

ADAPTER CARDS

Adapter cards already exist for many of the DCS companies. In addition there is a range of general purpose cards that offer reduced wiring for use with specific MTL modules. These are also available in left- and right-hand versions to ease panel wiring.

STANDARD MTL BACKPLANES

Standard MTL backplanes are available to accommodate 4, 8, 16, or 24 modules using screw-clamp connectors for the safe-area circuits. On an individual backplane, any module can be plugged into any position and module types can be mixed. For 8-, 16- and 24-way backplanes, screw-clamp connectors which plug into the backplanes provide primary and secondary 24V dc power supplies. Power to several 8- or 16-way backplanes can be interconnected to reduce and simplify wiring – see instruction manual INM4500/INM4600 for details.

OPTIONAL ACCESSORIES

Optional accessories include colour coded tagging strip kits for all three sizes of backplane and earth rail kits for 8 and 16-way versions. Mounting accessories are available for surface (all backplanes), T-section and G-section DIN-rail (8- and 16-way versions), and a horizontal plate for mounting 24-way backplanes in 19-inch racks.

WEATHERPROOF ENCLOSURES

Weatherproof enclosures are available for applications where separate safe–area enclosures are required for backplanes with modules. Available to accommodate one 4-way or one 8-way backplane, they are manufactured from GRP giving protection against dust and water to IEC529:IP65. The lids are made from transparent high-strength polycarbonate so that LEDs, switches, etc, on the tops of the modules are easy to see.

DCS VENDORS/SYSTEMS SUPPORTED:

ABB Automation
S100, INFI90, S800

Emerson
Delta V, M Series, S Series

GE Bently-Nevada

HIMA
HIMax

Honeywell
PMIO, C200, C300, UPIO, Safety Manager, USIO

Rockwell Automation
ICS Triplex, Plantguard

Schneider Electric
Foxboro I/A, Triconex Trident/Tricon, Modicon

Siemens
ET200, S7

Yokogawa
Centum R3, VP, Prosafe RS, CS3000

MTL CPS STANDARD BACKPLANES

Backplane model no.	Number of modules	Safe-area connections	MOUNTING KITS			ACCESSORIES		
			Surface	DIN–rail (T or G)	19–inch rack	Earth–rail kit	Tagging strip kit	Spare fuse pack
CPS04	4	Screw–clamp	SMS01	DMK01	–	–		FUS1.0ATE5
CPS08	8	Screw–clamp	SMS01	DMK01	–	ERK08	TSK08	FUS1.0ATE5
CPS16	16	Screw–clamp	SMS01	DMK01	–	ERK16	TSK16	FUS2.0ATE5 or FUS2.5ATE5
CPS24	24	Screw–clamp	SMS01	DMK01	HMP24	–	TSK24	FUS4.0ATE5

The given data is only intended as a product description and should not be regarded as a legal warranty of properties or guarantee.
In the interest of further technical developments, we reserve the right to make design changes.

Powering Business Worldwide

Eaton Electric Limited,
Great Marlings, Butterfield, Luton
Beds, LU2 8DL, UK.
Tel: + 44 (0)1582 723633 Fax: + 44 (0)1582 422283
E-mail: mtlenquiry@eaton.com
www.eaton.com

© 2025 Eaton
All Rights Reserved
Publication No.
EPS45/5500 Rev 7 080425

EUROPE (EMEA):
+44 (0)1582 723633 mtlenquiry@eaton.com
THE AMERICAS:
+1 800 835 7075 mtl-us-info@eaton.com
ASIA-PACIFIC:
+65 6 645 9888 sales.mtlsing@eaton.com

CPS BACKPLANE DIMENSIONS (mm)

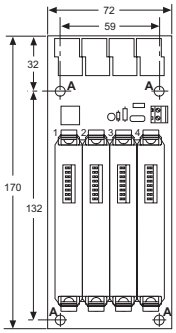

CPS04
CPS04-CC

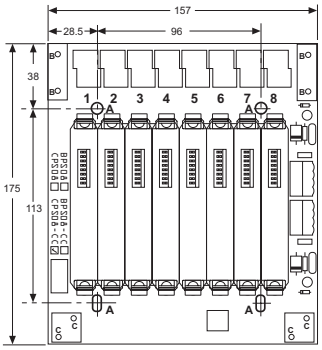

CPS08
CPS08-CC

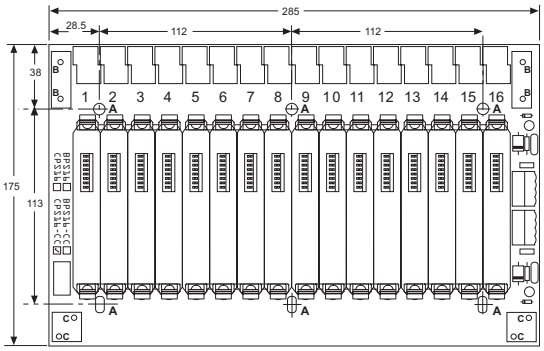

CPS16
CPS16-CC

-CC - Conformal Coating

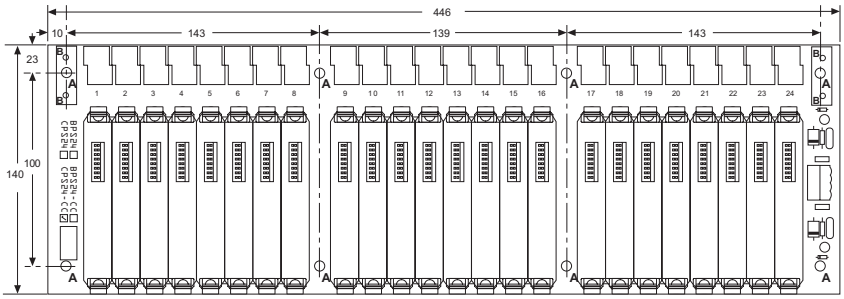

CPS24

Power requirements, Vs

21V dc to 35V dc through plug-in connectors

Safe–area connections

CPS: 2.5mm^2 screw-clamp terminals – 6 positions per module

Weight (without modules or accessories)

CPS04:	96g
CPS08:	225g
CPS16:	419g
CPS24:	592g

HMP24 - 19" RACK MOUNTING PLATE FOR CPS24

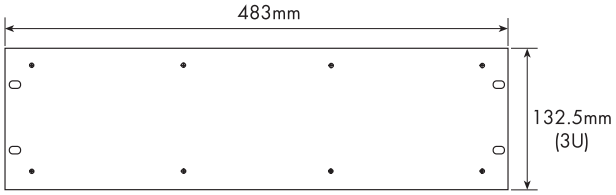

BACKPLANE ACCESSORIES

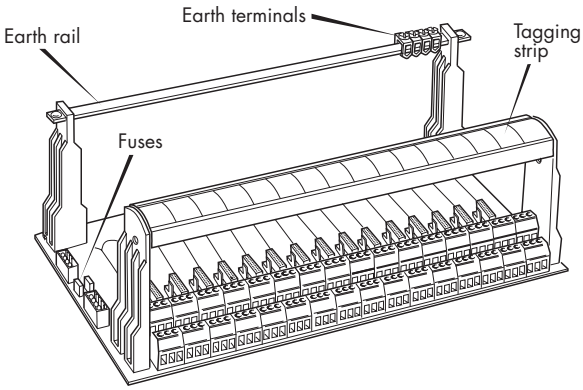

SCK45 - backplane clips

10 x strip of four

MCK45 - backplane clips

16 x strip of two

The given data is only intended as a product description and should not be regarded as a legal warranty of properties or guarantee.
In the interest of further technical developments, we reserve the right to make design changes.

Powering Business Worldwide

Eaton Electric Limited,
Great Marlings, Butterfield, Luton
Beds, LU2 8DL, UK.
Tel: + 44 (0)1582 723633 Fax: + 44 (0)1582 422283
E-mail: mtlenquiry@eaton.com
www.eaton.com

© 2024 Eaton
All Rights Reserved
Publication No.
EPS45/5500 Rev 7 080425

EUROPE (EMEA):
+44 (0)1582 723633 mtlenquiry@eaton.com
THE AMERICAS:
+1 800 835 7075 mtl-us-info@eaton.com
ASIA-PACIFIC:
+65 6 645 9888 sales.mtlsing@eaton.com

CUSTOM BACKPLANES

MTL4500 range of backplanes can be customised for specific applications and customer's requirements. All the signals on the backplane are 'safe-area' so custom designs are possible without the need for certification. Eaton offers a fast and efficient customising service upon request.

Many installations can benefit from the use of existing custom solutions. These provide reduced system wiring, modularisation of the channels to match the IO card. In addition diagnostics, such and line fault detection, can be grouped prior to connection into the system.

Remote cable connections:

In addition to the many DCS solutions, listed on a previous page, are backplanes and cables that are ideal when the isolators are mounted in remote cabinets and the signals need to be returned to the system via a multicore cable.

CP-DYN RANGE

FTA	Size	Function	MTL modules
CP-DYNB-AIO	B	16ch analogue input /output	MTL4541, 4546Y, 4573
CP-DYNB-AI250	B	16ch analogue input 1-5V o/p	MTL4541, 4573
CP-DYNA-2AIO	A	16ch analogue input / output	MTL4544, 4549Y
CP-DYNB-DI	B	16ch digital input	MTL4511, 4514
CP-DYNB-DILF	B	16ch digital input with LFD	MTL4514
CP-DYNB-2DI	B	32ch digital input	MTL4513, 4516, 4517
CP-DYNB-4DI	B	48ch digital input	MTL4510
CP-DYNA-DO	A	8ch digital output	MTL4521, 4521L
CP-DYNB-DO	B	16ch digital output	MTL4521, MTL4521L

DESCRIPTION

For use when the IS interfaces are remotely mounted from the control system, this series of cable connected FTAs provide a simple plug/socket connection method for IS field devices to any control system. The FTAs come fitted with mounting pillars for surface mounting or may be used with the DIN rail mounting kit to mount on a single DIN rail.

The cable connections between the system card and the FTA use the Tyco Dynamic range of connector which provide a reliable and high density solution.

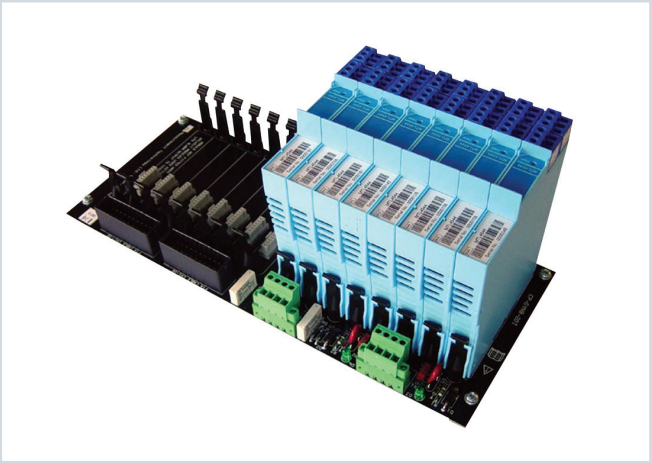

CABLES

All FTAs use the Tyco 20 pin Dynamic range of connectors. Cables are fitted with a mating connector and free ends the other, for connection to the system card.

Cable ordering code

CABDYN20-0.5	0.5m cable
CABDYN20-1	1.0m
CABDYN20-2	2.0m
CABDYN20-3	3.0m
CABDYN20-5	5.0m
CABDYN20-8	8.0m
CABDYN20-10	10m
CABDYN20-15	15m
CABDYN20-20	20m
CABDYN20-25	25m
CABDYN20-30	30m

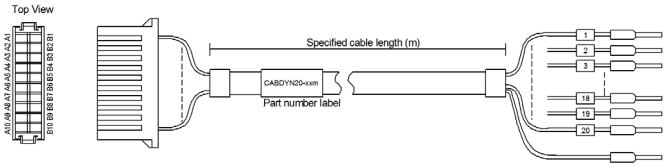

CP-DYN DIMENSIONS

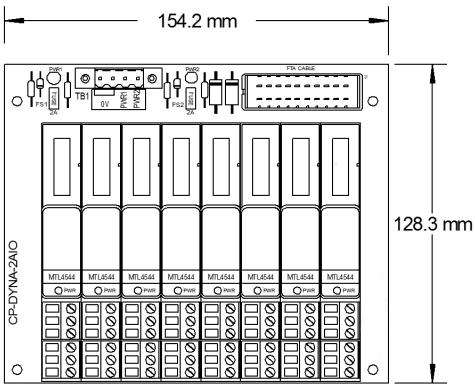

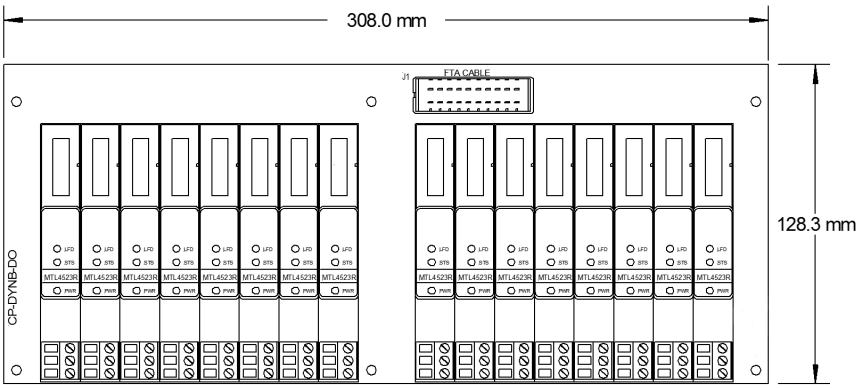

For full technical details please contact you local Eaton sales office.

The given data is only intended as a product description and should not be regarded as a legal warranty of properties or guarantee.
In the interest of further technical developments, we reserve the right to make design changes.

Powering Business Worldwide

Eaton Electric Limited,
Great Marlings, Butterfield, Luton
Beds, LU2 8DL, UK.
Tel: + 44 (0)1582 723633 Fax: + 44 (0)1582 422283
E-mail: mtlenquiry@eaton.com
www.eaton.com

© 2025 Eaton
All Rights Reserved
Publication No.
EPS45/5500 Rev 17 080425

EUROPE (EMEA):
+44 (0)1582 723633 mtlenquiry@eaton.com
THE AMERICAS:
+1 800 835 7075 mtl-us-info@eaton.com
ASIA-PACIFIC:
+65 6 645 9888 sales.mtlsing@eaton.com

CPELCO RANGE

A range of dedicated backplanes to interface with MTL4500 range of intrinsically safe isolator modules and the MTL HART maintenance system products. The backplanes offer a standard Elco interface connector for use in systems where the IS interfaces are remote from the DCS.

Backplane	Function	MTL module	Cable
CPM08-2AIO	16ch AI 4-20mA	MTL4544/4576/4549Y x 8	Elco38 x 1
CPM08-2AV	16ch AI 1-5V	MTL4544/4576 x 8	Elco38 x 1
CPM16-AIO	16ch AIO 4-20mA	MTL4541/4573/4546Y	Elco38 x 1
CPM16-2AIO	32ch AI 4-20mA	MTL4544/4576/4549Y x 16	Elco38 x 2
CPM16-2AV	32ch AI 1-5V	MTL4544/4576 x 16	Elco38 x 2
CPM08-DDI	16ch DI	MTL4513/4516	Elco38 x 1
CPM16-DO	16ch DO	MTL4524/4523R	Elco38 x 1
CGM08-DO	8ch DO	MTL4521/4521L (loop powered)	Elco38 x 1

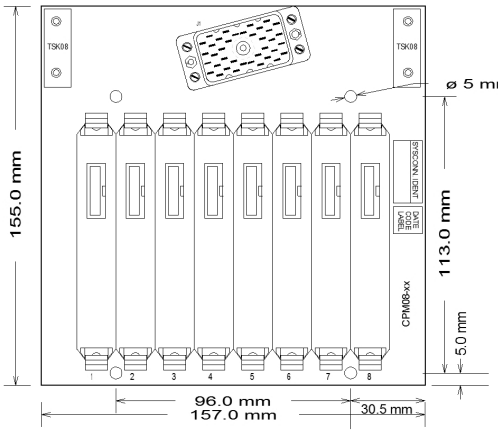

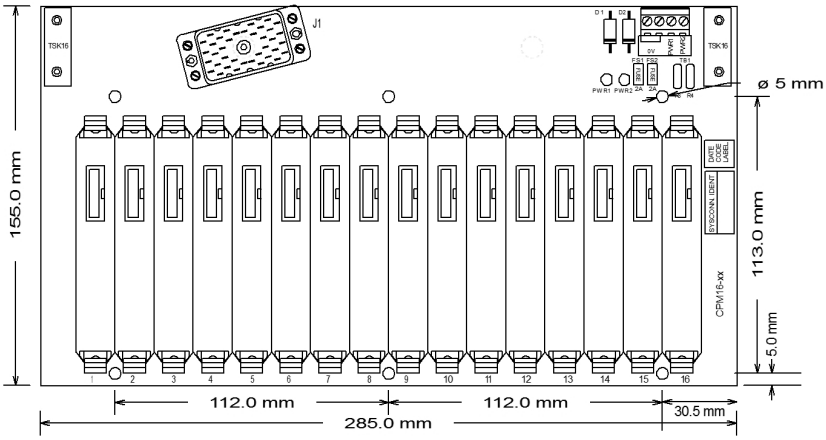

For full technical details please contact your local MTL sales office.

ANALOGUE SIGNAL REPEAT

CPS04-AIREP backplane may be used to generate a repeat output from a single transmitter source. This includes high integrity loops in general purpose applications. The MTL4641 is used to generate an isolated repeat signal from an existing 4-20mA loop.

CPS04-2AIO, 8 channel backplane, is used with IS signals with 2 channel AI or AO modules or with the MTL4544D to generate 4 inputs with repeat outputs.

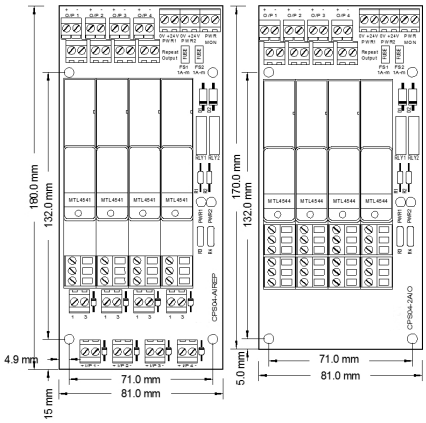

MTL CUSTOM BACKPLANE SOLUTIONS

A wide range of backplanes can be offered with application specific functions. System connection options and modularity for individual signal types can be provided to offer significant space and cost savings. Please contact your local Eaton sales office if you wish to discuss your application requirements.

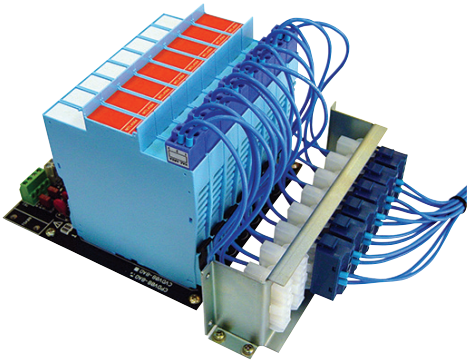

PRODUCT MIGRATION

Migration options for legacy MTL4000 range installations are also available. This enables isolators to be easily upgraded, or re-connecting existing isolators to a new control system, with the minimum of disturbance to existing wiring. For more information on product migration visit the resource section at www.mtl-inst.com

The given data is only intended as a product description and should not be regarded as a legal warranty of properties or guarantee.
In the interest of further technical developments, we reserve the right to make design changes.

Powering Business Worldwide

Eaton Electric Limited,
Great Marlings, Butterfield, Luton
Beds, LU2 8DL, UK.
Tel: + 44 (0)1582 723633 Fax: + 44 (0)1582 422283
E-mail: mtlenquiry@eaton.com
www.eaton.com

© 2024 Eaton
All Rights Reserved
Publication No.
EPS45/5500 Rev 17 080425

EUROPE (EMEA):
+44 (0)1582 723633 mtlenquiry@eaton.com
THE AMERICAS:
+1 800 835 7075 mtl-us-info@eaton.com
ASIA-PACIFIC:
+65 6 645 9888 sales.mtlsing@eaton.com

ORDERING INFORMATION

MTL4500/5500 range isolators
Specify part number: **eg, MTL4511, MTL5575**

Individual isolator identification

TH5000	Tag holder (Pack of 20)

Connectors - MTL4500 & MTL5500

HAZ1-3	Hazardous-area plug, terminals 1, 2 and 3
HAZ4-6	Hazardous-area plug, terminals 4, 5 and 6
HAZ-CJC	Hazardous-area plug, terminals 1 and 3 with cold-junction sensor
HAZ-CJC2	Hazardous-area plug, terminals 4 and 6 with cold-junction sensor
SAF1-3	Safe-area plug, terminals 1, 2 and 3
SAF4-6	Safe-area plug, terminals 4, 5 and 6

Connectors - MTL5500 only

SAF7-9	Safe-area plug, terminals 7, 8 and 9
SAF10-12	Safe-area plug, terminals 10, 11 and 12
PWR5000	Power connector, terminals 13 and 14

PowerBus - MTL5500 only

PB-8T	Powerbus Kit for up to 8 isolators
PB-16T	Powerbus Kit for up to 16 isolators
PB-24T	Powerbus Kit for up to 24 isolators
PB-32T	Powerbus Kit for up to 32 isolators

MTL5500 mounting accessories

THR2	1m length of DIN rail to EN 50022; BS 5584; DIN 46277
MS010	DIN-rail module spacer, 10mm (pack of 5)

MTL5500 earth-rail and tag strip accessories

IMB57	Insulating mounting block
ERB57S	Earth-rail bracket, straight
ERL7	Earth-rail, 1m length
ETM7	Earth terminal, bag of 50
TAG57	Tagging strip, 1m length
TGL57	Tagging strip labels, set of 10 x 0.5m

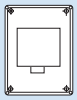

MTL5500 enclosures

DX070	Enclosure for MTL5500 x 4
DX170	Enclosure for MTL5500 x 10

MTL4500 standard backplanes

CPS04	4-way backplane screw-clamp connector
CPS08	8-way backplane screw-clamp connector
CPS16	16-way backplane screw-clamp connector
CPS24	24-way backplane screw-clamp connector

MTL4500 custom backplanes
Contact your local Eaton sales office for options and advice

MTL4500 backplane mounting accessories

DMK01	DIN-rail mounting kit, T- or G-section (pack of 40) 8-way backplanes require 4, 16-way backplanes require 6
SMS01	Surface mounting kit (pack of 40) 4- and 8-way backplanes require 4, 16-way backplanes require 6, 24-way backplanes require 8
HMP24	Horizontal mounting plate and screws for 19-inch rack mounting 24-way backplanes only
BMK08	Mounting kit for one 4- or 8-way backplane
BMK16	Mounting kit for one 16-way backplane

MTL4500 backplane accessories

ERK08	Earth rail kit for CPS08 backplane
ERK16	Earth rail kit for CPS16 backplane
TSK08	Tagging strip kit for CPS08 backplane
TSK16	Tagging strip kit for CPS16 backplane
TSK24	Tagging strip kit for CPS24 backplane
FUS1.0ATE5	**Fuse kit,** 1.0A (pack of 10)
FUS2.0ATE5	**Fuse kit,** 2.0A (pack of 10)
FUS2.5ATE5	**Fuse kit,** 2.5A (pack of 10)
FUS4.0ATE5	**Fuse kit,** 4.0A (pack of 10)
MCK45	MTL4000 backplane conversion kit (16 clip pairs per pack)
SCK45	Module 4-clip strips (10 strips + 40 rivets per pack)
MPL01	Module position label (blank) (50 per pack)
MCC45	Module backplane connector cover (pack of 50)

Literature

INM5500	MTL5500 range instruction manual
INM4500/ 4600	MTL4500/MTL4600 range instruction manual

Configurator and software

PCL45USB	Configurator, PC interface and software
PCS45	PC software

Please go to our website at www.eaton.com for the latest information regarding safety approvals, certificates and entity parameters.

Powering Business Worldwide

Eaton Electric Limited,
Great Marlings, Butterfield, Luton
Beds, LU2 8DL, UK.
Tel: + 44 (0)1582 723633 Fax: + 44 (0)1582 422283
E-mail: mtlenquiry@eaton.com
www.eaton.com

© 2024 Eaton
All Rights Reserved

Publication No.
EPS45/5500 Rev 17 080425

EUROPE (EMEA):
+44 (0)1582 723633 mtlenquiry@eaton.com
THE AMERICAS:
+1 800 835 7075 mtl-us-info@eaton.com
ASIA-PACIFIC:
+65 6 645 9888 sales.mtlsing@eaton.com