MTL7700 range

DIN-rail mounting safety barriers

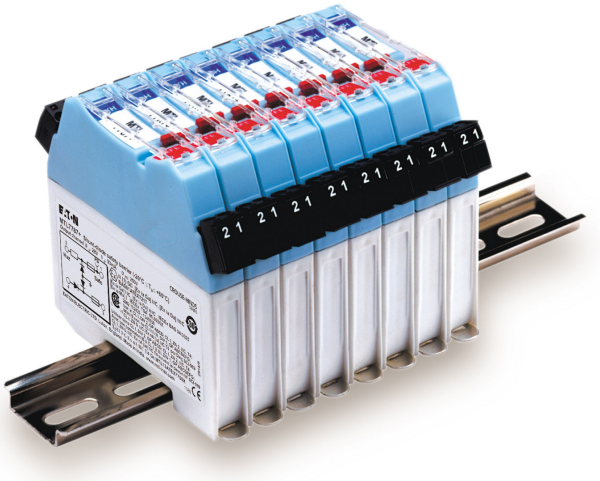

- **Removable terminals**
- **Bussed power feed to other modules**
- **Relay and solid state switch modules**
- **Dual channel variants – 6.3mm per channel**
- **Proximity detector inputs**
- **Electronic fusing**
- **Direct replacement for MTL700 range barriers**
- **Compatible terminal numbering and safety descriptions**

Since its introduction in 1984 the MTL700 range has established itself as the worldwide standard for safety barriers. Known for its quality and reliability, the MTL700 range is widely used in applications all over the world.

The MTL7700 range follows closely in the footsteps of the MTL700, but as a DIN rail mounting barrier, providing quick and easy installation without the need for special hardware.

Removable terminals are used for ease of installation, maintenance and for providing a loop disconnect by simply unplugging the terminals from the side of the module. Wire entry is also angled to assist wiring within limited space enclosures.

MTL7700 barriers clamp simply and securely onto standard T-section DIN rail, simultaneously making a reliable IS earth connection.

For applications where field power is required for switch inputs or 2-wire transmitters, the MTL7700 range provides a bussed power feed facility. When used in conjunction with the MTL7798 power feed module the user has a fully protected, electronically fused supply to many barriers with no additional wiring required.

MTL7700 active modules are protected with an electronic fuse for the majority of applications. The MTL7798 active fused, power feed module can protect up to 40 other modules using the bussed power facility and provides a clear indication of a trip condition via a red LED.

The MTL774X range of barriers offer a NAMUR compatible input and a choice of relay or solid state output. The solid state outputs are floating so switching to ground or from a power rail into an input is also possible. The solid state interface also provides a high frequency transfer for use in flow or rotation applications.

Dual channel relay or solid state modules offer the highest packing density with only 6.3mm per channel and when used in conjunction with the power bus, offer users the minimum of wiring with the maximum packing density and the lowest cost per channel.

Powering Business Worldwide

Eaton Electric Limited,
Great Marlings, Butterfield, Luton
Beds, LU2 8DL, UK.
Tel: + 44 (0)1582 723633 Fax: + 44 (0)1582 422283
E-mail: mtlenquiry@eaton.com
www.eaton.com

© 2024 Eaton
All Rights Reserved
Publication No.
EPS7700 Rev 17 150424

SPECIFICATIONS

'Key' barriers shown in blue

For notes 1 to 7 see 'Terminology' (later in this section)

Model No.	Safety description[1]			Polarities[2] available			Application	Basic circuit	Max. end-[3] to-end resistance	Vwkg at[4] 10µA or (1µA)	[5] Vmax	Fuse[6] rating
MTL	V	Ω	mA	+	–	ac		Hazardous Safe	Ω	V	V	mA
7706+	28	300	93	✓			Transmitters	See 'HOW THEY WORK' and 'ACTIVE / ELECTRONICALLY PROTECTED BARRIERS'	See additional specification		35	50
7707+	28	300	93	✓			Switches				35	50
	28	diode									35	50
7707P+	28	164	171	✓			Transmitters, switches, controller outputs IIB				35	50
	28	diode	–								35	50
7710+/-	10	50	200	✓	✓		6V dc systems	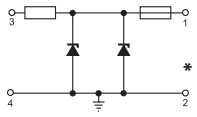	75	6.0	7.0	50
7710P+	10	33	300	✓					41	7.9	9.5	200
7715+	15	100	150	✓			12V dc systems		119	12.0	13.1	100
7715P+	15	50	291	✓					64	12.3	13.4	100
7722+/-	22	150	147	✓	✓		18V dc systems		174	19.6	20.2	50
7728+	28	300	93	✓			Controller outputs, solenoids		333	25.9	26.5	50
7728-	28	300	93		✓		Transmitters		333	25.9	26.5	50
7728ac	28	300	93			✓			333	25.0	25.9	50
7728P+	28	234	119	✓			Controller outputs, solenoid valves		252	24.9	25.9	100
7729P+	28	164	170	✓			Controller outputs, solenoid valves IIB		184	24.9	25.9	100
7772ac	22	300	73			✓			333	17.7	21.5	50
774X	10	—	19				Prox sw input, solid state output and line fault detect	See 'ACTIVE / ELECTRONICALLY PROTECTED BARRIERS'	—	—	30/35	50
7751ac	1	10	100			✓	Sensors	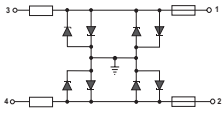	20	0.3	2.0	250
	1	10	100			✓			20	0.3	2.0	250
7755ac	3	10	300			✓	2- or 3-Wire RTDs (floating bridge)		19.0	(1)	3.4	250
	3	10	300			✓			19.0	(1)	3.4	250
7756ac	3	10	300			✓	3-Wire RTDs (grounded bridge)	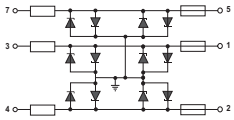	19.0	(0.7)	2.7	250
	3	10	300			✓			19.0	(0.7)	2.7	250
	3	10	300			✓			19.0	(0.7)	2.7	250
7758+/-	7.5	10	750	✓	✓		Gas detectors		17	6.0	7.3	200
	7.5	10	750						17	6.0	7.3	200
7761ac	9	90	100			✓			107	6.0	7.0	100
	9	90	100						107	6.0	7.0	100
7761Pac	9	350	26			✓	Strain-gauge bridges		378	6.8	7.5	50
	9	350	26						378	6.8	7.5	50
7764+/-/ac	12	1k	12	✓	✓	✓	Strain-gauge bridges		1050	10.0	10.9	50
	12	1k	12						1050	10.0	10.9	50
7766ac	12	150	80			✓		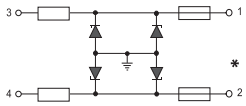	174	10.0	10.6	50
	12	150	80						174	10.0	10.6	50
7766Pac	12	75	157			✓	Strain-gauge bridges		92	9.6	10.5	100
	12	75	157				Strain-gauge bridges		92	9.6	10.5	100
7767+	15	100	150	✓			12V dc systems		119	12.0	13.1	100
	15	100	150				12V dc systems		119	12.0	13.1	100
7768+	22	150	147	✓					198	17.7	21.5	50
	22	150	147	✓					198	17.7	21.5	50
7779+	28	300	93	✓			Controller outputs	requires channels separate in IIC	333	25.9	26.5	50
	28	300	93				Controller outputs		333	25.9	26.5	50
7796+	26	300	87	✓			Vibration probes		333	23.9	24.5	50
	20	390	51						428	18.3	18.9	50
7796-	26	300	87		✓		Vibration probes		333	23.9	24.5	50
	20	390	51						428	18.3	18.9	50
7760ac	10	50	200			✓	Active dc & ac sensors	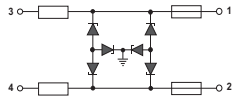	75	6.0	6.7	50
	10	50	200				Thermocouples		75	6.0	6.7	50
7765ac	15	100	150			✓			124	12.0	12.5	50
	15	100	150						124	12.0	12.5	50
7778ac	28	600	47			✓			651	24.0	25.4	50
	28	600	47						651	24.0	25.4	50
7789+	28	300	93[a]	✓			Switch inputs / Signal returns	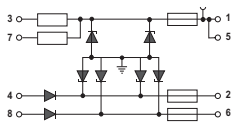	651	26.6	27.2	50
									651	26.6	27.2	50
	28	diode	—						0.9V+26Ω	26.6	27.2	50
	28	diode	—						0.9V+26Ω	26.6	27.2	50
7787+/-	28	300	93	✓	✓		Transmitters	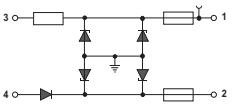	333	26.6	27.2	50
	28	diode	—				Controller outputs, switches		0.9V+21Ω	26.6	27.2	50
7787P+	28	234	119	✓					253	26.4	27.2	80
	28	diode	—						0.9V+21Ω	26.4	27.2	80
7788+	28	300	93	✓			Transmitters	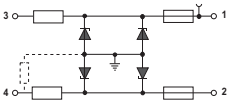	333	25.9	26.5	50
	10	50	200	✓					75	6.0	7.0	50
7788R+	28	300	93	✓					333	25.9	26.5	50
	10	50	200	✓					75	6.0	7.0	50

[a] Terminals 3 & 7 connected together

* Diagrams show positive versions. All diodes reversed on negative versions. Additional diodes fitted on ac versions.

HOW THEY WORK

All MTL7700 range barriers are based on the same simple principle. Each channel contains two stages of pulse-tested Zener or forward-connected diodes and an 'infallible' terminating resistor. In the event of an electrical fault in the safe area, the diodes limit the voltage that can reach the hazardous area and the resistor limits the current. A fuse protects the diodes, and the two stages of voltage limitation ensure continued safety if either stage should fail. No active output-current limiting circuits are employed. All models are certified 'ia' for all zones and 'IIC' for all explosive atmospheres (except MTL7707P+ and MTL7729P+, 'ia' 'IIB').

TERMINOLOGY

1. Safety description
The safety description of a barrier, eg '10V 50Ω 200mA', refers to the maximum voltage of the terminating Zener or forward diode while the fuse is blowing, the minimum value of the terminating resistor, and the corresponding maximum short-circuit current. It is an indication of the fault energy that can be developed in the hazardous area, and not of the working voltage or end-to-end resistance.

Note: Refer to certificates from different agencies for safety / entity parameter details of each model.

2. Polarity
Barriers may be polarised + or –, or non-polarised ('ac'). Polarised barriers accept and/or deliver safe-area voltages of the specified polarity only. Non-polarised barriers support voltages of either polarity applied at either end.

3. End-to-end resistance
The resistance between the two ends of a barrier channel at 20°C, i.e. of the resistors and the fuse. If diodes or transistors are present, their voltage drop (transistors ON) is quoted in addition.

4. Working voltage (Vwkg)
The greatest steady voltage, of appropriate polarity, that can be applied between the safe-area terminal of a 'basic' barrier channel and earth at 20°C for the specified leakage current, with the hazardous-area terminal open circuit.

5. Maximum voltage (Vmax)
The greatest steady voltage, of appropriate polarity, that can be applied continuously between the safe-area terminal of any barrier channel and earth at 20°C without blowing the fuse. For 'basic' barriers, it is specified with the hazardous-area terminal open circuit; if current is drawn in the hazardous area, the maximum voltage for these barriers is reduced. The 'ac' channels of 'basic' barriers and most channels of overvolt-protected barriers withstand voltages of the opposite polarity also – see circuit diagrams.

6. Fuse rating
The greatest current that can be passed continuously (for 1000 hours at 35°C) through the fuse.

7. Star connection
In star-connected barriers, the two channels are interlocked such that the voltage between them cannot exceed the working voltage, Vwkg: this allows for higher cable capacitance or inductance.

8. Maximum safe-area voltage (U_m)
The maximum permissible safe-area voltage (U_m) for MTL7700 range barriers is 250V ac/dc.

GENERAL SPECIFICATION

Ambient temperature and humidity limits
–20 to +60°C continuous working
–40 to +80°C storage
5-90% RH non-condensing
IP Rating: IP20

Leakage current
For 'basic' barriers with a working voltage of 5V or more, the leakage current decreases by at least one decade per volt reduction in applied voltage below the working voltage, over two decades. For the MTL7755ac/7756ac it decreases by at least one decade for a 0.4V reduction in applied voltage.

Terminations
Removable Black PBT terminals accommodate conductors up to 2.5mm^2 (13AWG). Hazardous-area terminals are identified by blue labels. Removal force >15N
Torque setting: 0.4Nm to 0.6Nm

Colour coding of barrier label
Grey: non-polarised
Red: positive polarity (MTL7706 negative to transmitter)
Black: negative polarity
White: dummy barrier, MTL7799

Weight
140g approx

Mounting and earthing
By 35mm Top Hat DIN rail

Casing Material
Polycarbonate

DIMENSIONS (mm)

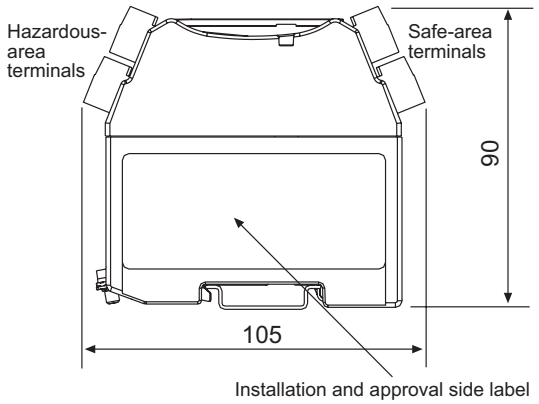

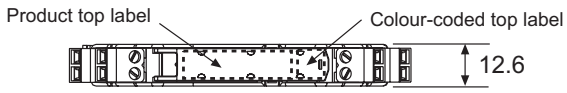

MTL7700 RANGE KEY BARRIERS SUMMARISED

TYPE	APPLICATION	KEY BARRIER
Analogue input (low-level)	Resistance temperature detectors Thermocouples, ac sensors	7756ac 7760ac
Analogue input (high-level)	Transmitters, 2-wire, 4/20mA	7706+ 7787+
Analogue output	Controller outputs, one line earthed Controller outputs, neither line earthed	7728+ 7787+
Digital (on/off) input	Switches	7787+ 7741/3
Digital (on/off) output	Solenoids, alarms, LEDs	7728

ACTIVE / ELECTRONICALLY PROTECTED BARRIERS

ACTIVE / ELECTRONICALLY PROTECTED BARRIERS

The following barriers have built-in overvolt protection, allowing their use with unregulated power supplies. In many applications, eg, sensor inputs or controller outputs, there is insufficient power available to blow the barrier fuse and this additional protection is not necessary. However, where the barrier is connected to a power supply, eg, for energising transmitters, switches, solenoids or local alarms, overvolt protection allows the barriers to be used with unregulated supplies and also gives protection against faulty wiring during commissioning.

MTL7706+ for 'smart' 2-wire 4/20mA transmitters

The MTL7706+ is a 1-channel shunt-diode safety barrier, with built-in electronic overvolt protection, for energising a 2-wire, 4/20mA transmitter in a hazardous area. It is powered from a positive supply of 20–35V dc and delivers a 4/20mA signal into an earthed load in the safe area. It is proof against short circuits in the field and in the safe area and is extremely accurate. The MTL7706+ will pass incoming communication signals up to 10kHz from a 'smart' transmitter, while in the outgoing direction it will pass signals of any frequency likely to be encountered.

Since the MTL7706+ has no return channel for energising the load, the entire output of the single '28V' channel is available to power the transmitter, providing high output capability. This channel is negatively polarised, and the safe-area signal is in fact the very current that returns through it from the hazardous area, the novel circuit being energised by a built-in floating dc supply derived from the external dc source of power.

To prevent any leakage through the zener diodes and maximise the output voltage available at 20mA, the floating supply is given a rising voltage/current characteristic. A separate circuit limits the current to protect the fuse in the event of a short circuit in the hazardous area.

With a 20V supply, the barrier will deliver 16.2V minimum at 20mA for the transmitter and lines and consumes typically 45mA at 24V operation.

BASIC CIRCUIT

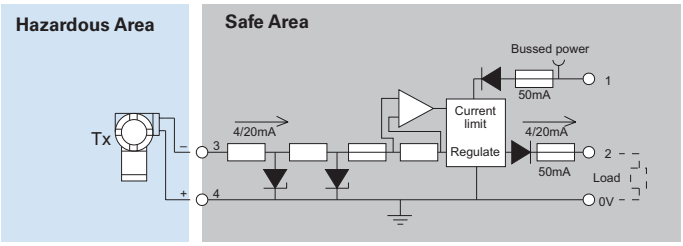

ADDITIONAL SPECIFICATION

Safety description
28V 300Ω 93mA

Supply voltage
20 to 35V dc w.r.t earth

Output current
4 to 20 mA

Voltage available to transmitter and lines
16.2V @ 20mA with 250Ω load (negative w.r.t. earth)
11.0V @ 20mA with 500Ω load (negative w.r.t. earth)

Accuracy
±2μA under all conditions

Safe-area load resistance
0 to 500Ω

Supply current
45mA typical at 20mA and 24V supply
60mA maximum at 20mA and 20V supply

MTL7707+ for switch inputs and switched outputs

The MTL7707+ is a 2-channel shunt-diode safety barrier similar to the MTL7787+ but with built-in electronic overvolt protection. It is intended primarily for safeguarding a hazardous-area switch controlling a relay, opto-coupler or other safe-area load from an unregulated dc supply in the safe area.

The outgoing channel accepts supply voltages up to +35V and is protected against reverse voltages: the return channel is unaffected by voltages up to +250V.

In normal operation the protection circuit introduces only a small voltage drop and shunts less than 1mA to earth, so its overall effect is minimal. If the supply voltage exceeds about 27V, however, causing the Zener diodes to conduct – or if the safe-area load has a very low resistance – the supply current is limited automatically to 50mA, protecting the fuse and power supply and enabling the loop to continue working.

BASIC CIRCUIT

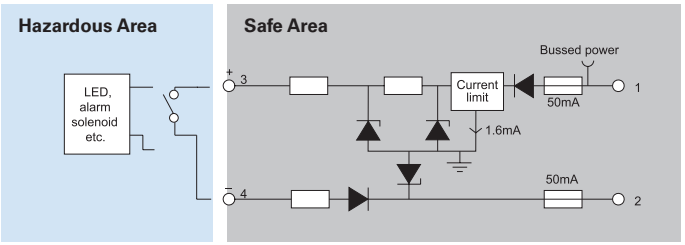

ADDITIONAL SPECIFICATION

Safety description
28V 300Ω 93mA, terminals 1 to 3
28V Diode, terminals 2 -4

Supply voltage
10 to 35V dc with respect to earth

Output current
Up to 35mA available

Maximum voltage drop
(at 20°C, current not limited)
Iout x 345Ω + 0.3V, terminals 1 to 3
Iout x 25Ω + 0.9V, terminals 4 to 2

Supply current
Iout + 1.6mA, supply <26V
Limited to 50mA, supply >28V or low load resistance

MTL7707P+ for switch inputs and switched outputs, 2W Transmitters (IIB gases)

The MTL7707P+ is a two-channel shunt-diode safety barrier similar to the MTL7787P+, but is designed for use with group IIB gases and features built-in electronic overvolt protection allowing use with unregulated power supplies up to 35V dc. It is intended primarily as a low cost solution for driving IIB certified 2-wire 4/20mA transmitters, but can also be used with controller outputs with current monitoring, solenoid valves and switches. To protect the fuse and enable the loop to continue working, the supply current is limited automatically at 50mA should the output be short-circuited or excess voltage applied.

BASIC CIRCUIT

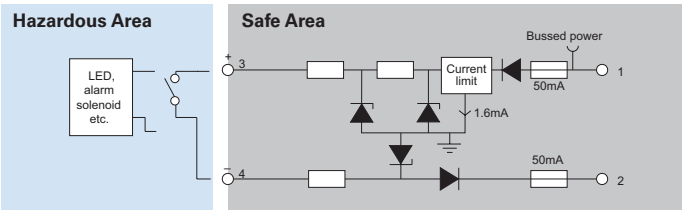

ADDITIONAL SPECIFICATION

Safety description
28V 164Ω 171mA, terminals 1 to 3
28V Diode, terminals 4 to 2

Supply voltage
10 to 35V dc with respect to earth

Output current
Up to 35mA available

Maximum voltage drop
(at 20°C, current not limited)
Iout x 218Ω + 0.3V, terminals 1 to 3
Iout x 20.1Ω + 0.9V, terminals 4 to 2

Supply current
Iout + 1.6mA, supply <26V
Limited to 50mA, supply >28V or low load resistance

MTL7741 proximity sensor or switch input and relay output

The MTL7741 is a single channel switch/prox input barrier with changeover relay contacts acting as the safe area interface. Relay contacts provide a universal interface capable of switching a wide range of signals including ac, low level and high level voltages. Phase reversal is achieved by connecting the normally open or normally closed contacts as required. The power bus terminal may be used to connect the module to a power source.

BASIC CIRCUIT

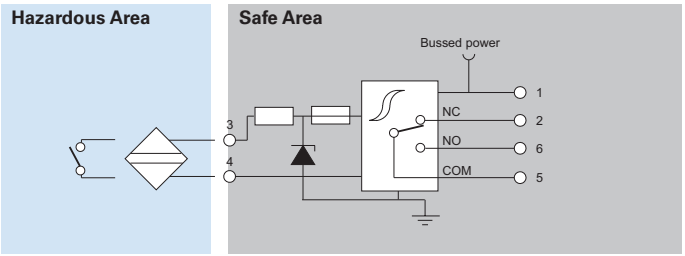

ADDITIONAL SPECIFICATION

Safety description
10V 19mA

Supply voltage
22.9 to 30V dc with respect to earth

Input characteristics
Relay energised if input >2.1mA(<2kΩ)
Relay de-energised if input <1.2mA(>10kΩ)

Relay Contacts
30V ac 0.5A. Resistive
30V dc, 1A. Resistive

Supply current
26mA maximum @ 24V

Response time
<10ms

MTL7742 proximity sensor or switch input with solid state output

The MTL7742 is a single channel switch/prox input barrier with an open collector solid state interface to the safe area equipment. The solid state switch is especially useful for high frequency switching apparatus including pulse and rotational sensors. The power bus terminal can be used to connect power to the module and the input power supply range makes the module suitable for use with unregulated supplies.

BASIC CIRCUIT

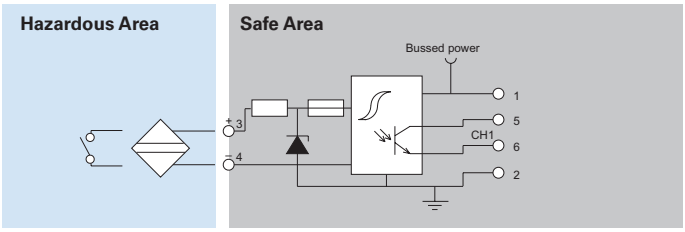

ADDITIONAL SPECIFICATION

Safety description
10V 19mA

Supply voltage
20 to 35V dc with respect to earth

Input characteristics
Output energised if input >2.1mA(<2kΩ)
Output de-energised if input <1.2mA(>10kΩ)

Output characteristics

Operating frequency	dc to 2.5kHz
Max off-state voltage	35V
Max off-state leakage	10µA
Max on-state voltage drop	<1.41V @ 50mA, <1.22V @ 2mA typically <1V
Max on-state current	50mA

Supply current
20mA maximum @ 24V

MTL7743 2 channel proximity sensor or switch input and relay outputs

The MTL7743 is a dual channel switch/prox sensor input barrier with a relay interface. This module is ideal for applications where high channel packing densities are required for digital inputs. Power is connected using the power bus terminal.

BASIC CIRCUIT

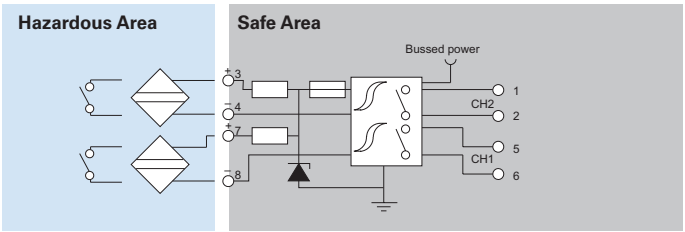

ADDITIONAL SPECIFICATION

Safety description
10V 19mA

Supply voltage
22.9 to 30V dc with respect to earth

Input characteristics
Relay energised if input >2.1mA(<2kΩ)
Relay de-energised if input <1.2mA(>10kΩ)

Relay Contacts
AC 30V, 0.5A. resistive; DC 30V, 1A. resistive

Supply current
45mA maximum @ 24V

Response time
<10ms

MTL7744 2 channel proximity sensor or switch inputs with solid state outputs

A dual channel version of the MTL7742. This module provides two solid state interfaces for prox/switch inputs. Power is connected via the power bus.

BASIC CIRCUIT

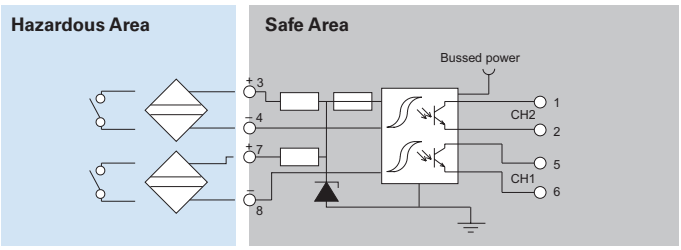

ADDITIONAL SPECIFICATION

Safety description
10V 19mA
10V 19mA

Supply voltage
20 to 35V dc with respect to earth

Input characteristics
Output energised if input >2.1mA(<2kΩ)
Output de-energised if input <1.2mA(>10k)

Output characteristics

Operating frequency	dc to 2.5kHz
Max off-state voltage	35V
Max off-state leakage	10µA
Max on-state voltage drop	1.41V @ 50mA, 1.22V @ 2mA typically <1V
Max on-state current	50mA

Supply current
29mA maximum @ 24V

MTL7745 proximity sensor or switch input with relay output and line fault detect

The MTL7745 is a single channel switch/prox input barrier providing line fault detection. Proximity detectors or switches fitted with end-of-line resistors may be connected. Short circuit or open ciruit conditions in the field wiring will generate an alarm condition. The LFD relay contacts close when a fault is detected allowing the contacts to be connected in parallel to provide a common alarm. The power bus terminal can be used to connect power to this module.

BASIC CIRCUIT

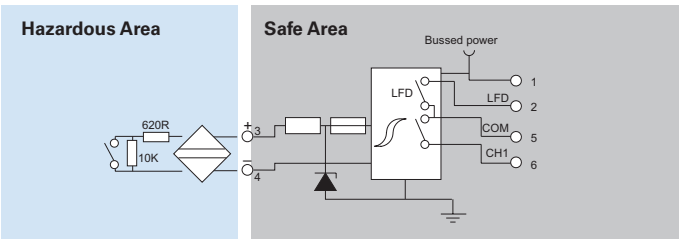

ADDITIONAL SPECIFICATION

Safety description
10V 19mA

Supply voltage
22.9 to 30V dc with respect to earth

Input characteristics
Output energised if input >2.1mA(<2kΩ)
Output de-energised if input <1.2mA(>10kΩ)

LFD relay + Red LED
Energised if input <50µA or <100Ω

Relay contacts
30V ac 0.5A. Resistive
30V dc, 1A. Resistive

Supply current
38mA maximum @ 24V

Response time
<10ms

MTL7798 Power feed and protection module

The MTL7798 power feed module incorporates both voltage and current sense mechanisms to protect barrier circuits by activating a solid state trip mechanism when fault or overload conditions occur in the power source circuit. Resetting the module after tripping is achieved by interupting the supply to the unit. A red LED indicates a circuit trip condition and a green LED the availability of power at the outputs. Bussed power for other modules is sourced from the top of the unit using the Bus Power Link BPL7700 or via terminals 1 and 2.

BASIC CIRCUIT

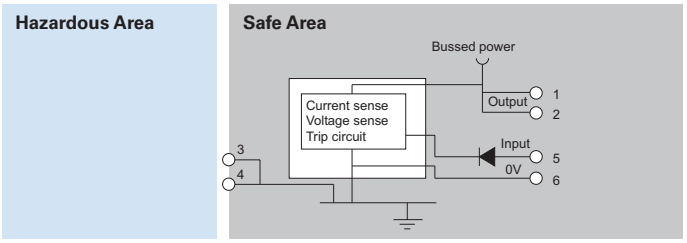

ADDITIONAL SPECIFICATION

Input voltage range (terminals 5&6)
20 to 26.8V

Maximum input voltage capability
45V

Power source requirements
>1.8A

Trip mechanism
Minimum trip 26.8V @ 20°C (+18mV/°C)

Output current range
0 to 800mA

Maximum voltage drop
20mV @ 0mA, 1.0V @ 800mA load

MTL7700 RANGE BARRIER APPLICATIONS

MTL7700 range barriers protect devices located in all normally occurring explosive atmospheres, including air/flammable gas mixtures, dusts and fibres. Applications covered include the protection of installations incorporating uncertified devices ('simple apparatus') such as thermocouples, switches and resistive sensors, or separately certified 'energy storing' (or 'voltage producing') apparatus including ac sensors, transmitters and current-to-pneumatic (I/P) converters. Recommended choices for specific applications are discussed briefly in the following pages.

ANALOGUE INPUTS (HIGH LEVEL)

2-wire transmitters, 4/20mA, conventional and smart
The recommended barrier for use with 'conventional' and 'smart' 4/20mA transmitters (fed by a 26V regulated supply) is the MTL7787+. This provides up to 13.02V (14.6V for MTL7787P+) at Vwkg and 20mA for a transmitter and its lines as well as 5V for the typical 250Ω load. This application and this barrier is suitable for use with the optional power bus facility.

The MTL7706+ is recommended for applications where an unregulated supply of up to 35V is used. It provides 16.0V for conventional and Smart transmitters at 20mA, as well as 5V for a typical 250Ω load. With the MTL7706+ terminal 3 is negative with respect to earth, so the connections to terminals 3 and 4 should be reversed.

The voltage available for the transmitter and its lines can be increased by converting the return current into a 1–5V signal before it passes through an MTL7788+ barrier. The MTL7788R+ contains a 250Ω precision resistor for this purpose and makes 14.2V available.

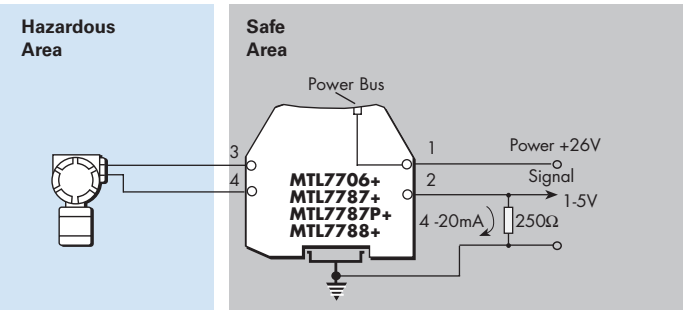

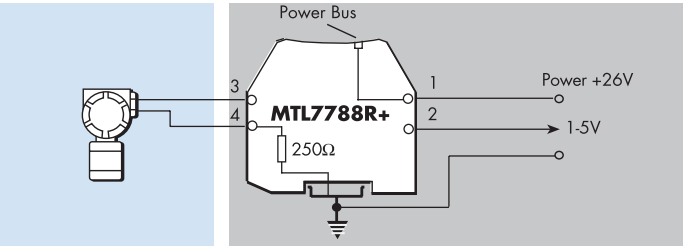

Vibration probes
The 3-wire transmitters used with vibration monitoring equipment are invariably supplied by a –24V dc power supply – hence the recommended barrier choice is the negatively-polarised MTL7796–.

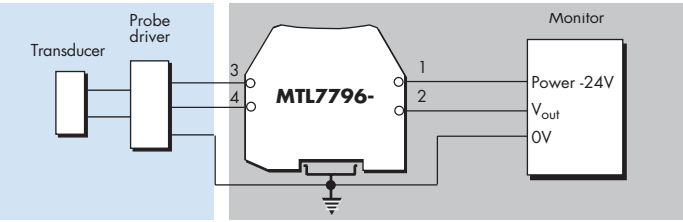

ANALOGUE INPUTS (LOW-LEVEL)

Thermocouples and mV sources
The recommended barrier for thermocouples and mV sources is the MTL7760ac. This 2-channel non-polarised barrier retains the 'earth-free' nature of the signal and, providing the receiver's input 'floats', rejects common-mode ac and dc interference up to at least 7V and is unaffected by earth faults on the primary element.

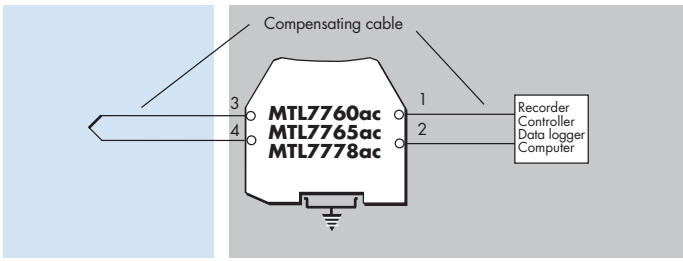

AC sensors, photocells, microphones and turbine flowmeters
The MTL7760ac is the recommended choice for these devices. While many of these are designated 'simple apparatus' and thus do not need certification, note that some ac sensors may be subject to a significant level of inductance and will therefore need to be designed and certified for hazardous-area locations.

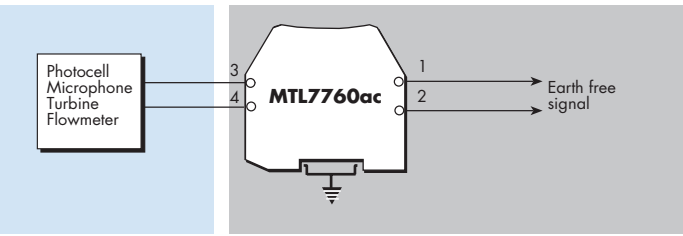

Slidewire displacement transducers
The simplest choice is the MTL7760ac. This barrier supplies power and brings back a unipolar signal.

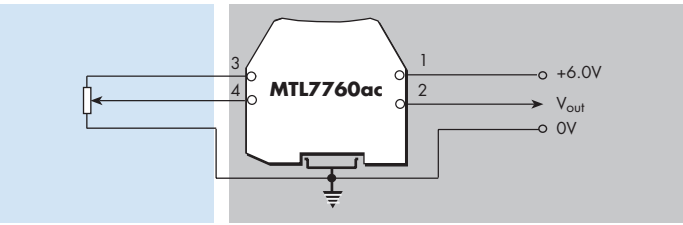

RTDs

For 3-wire RTDs, a single MTL7755ac barrier is the most economical choice. This is suitable for use with a floating bridge – the two leads from the bridge arms are protected by the barrier with the third (supply) lead being earthed through the barrier. The barrier has a low end-to-end resistance of only 19Ω/channel to minimise span changes and its channels track within 0.15Ω (between –20°C and +60°C) to minimise zero shift with temperature.

If the bridge circuit is already earthed, the third barrier channel provided by an MTL7756ac is needed. For extreme accuracy, 3 channels and an earth-free bridge can be used, a configuration that cancels out the small errors due to barrier leakage.

Channels 1 and 2 (those between terminals 1 & 2 and 3 & 4 respectively) track to within 0.15Ω (between –20°C and 60°C).

4-wire constant-current circuits do not need matched barrier resistances and can be protected by two MTL7761ac barriers. If the increase in loop resistance is too great, use two MTL7755ac barriers instead.

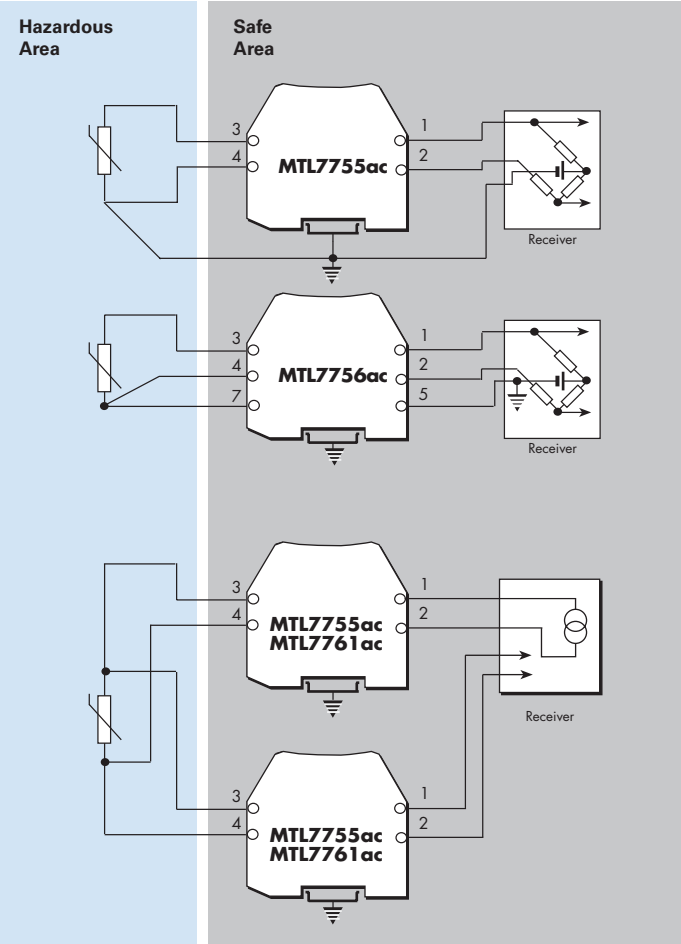

STRAIN-GAUGE BRIDGES

Single strain-gauge bridges

This shows an arrangement using two or three barriers, which is safe in IIC gases.

With the MTL7761ac, the circuit is powered from a 12V (±6V), 214Ω (107Ω + 107Ω) source. If the resistive bridge elements are 230Ω, then the voltage applied to the bridge will be 6.2V, and if the bridge resistances are 350Ω, then the bridge's applied voltage will be 7.4V.

An MTL7764ac can be used to sense the bridge supply voltage.

An MTL7761ac is used here for the mV output.

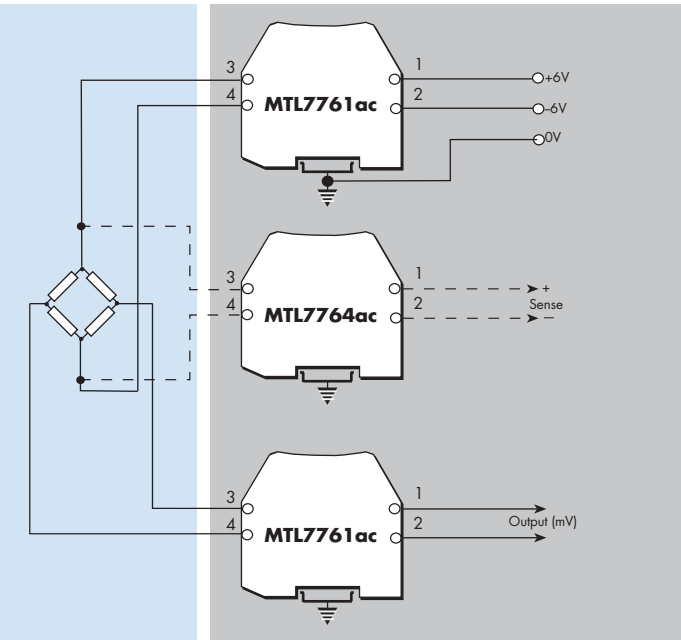

STRAIN-GAUGE BRIDGES (cont)

Double strain-gauge bridges

Quite frequently there is a demand to monitor two load cells, and a possible circuit, safe in IIC, is shown.

Here, the lower voltage drop of the MTL7766Pac is an advantage.

The MTL7766Pac supplies power to the bridge(s) while two MTL7761Pac barriers interface with the sense and pick-off circuits.

Using 350Ω bridge systems, the following voltages are available from an MTL7766Pac with a ±10V supply:

1 bridge:	13.11V
2 bridges:	9.75V

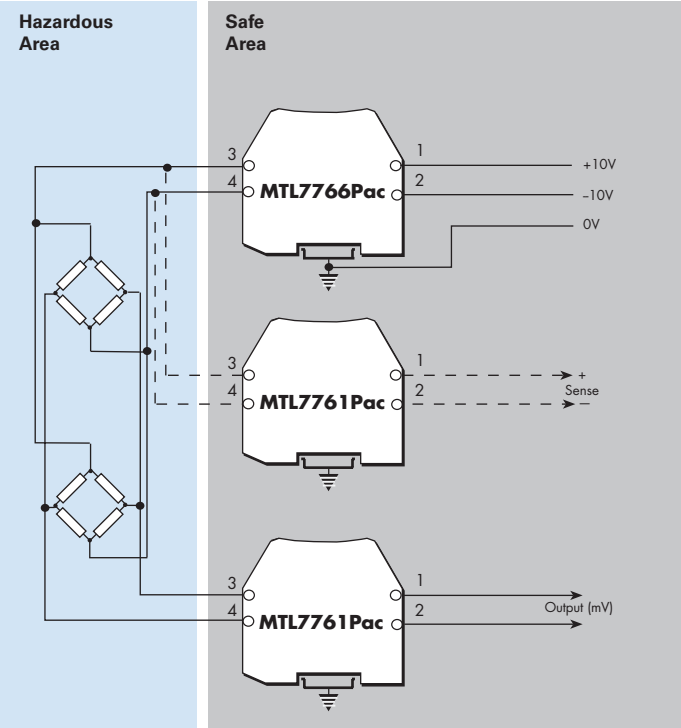

ANALOGUE OUTPUTS

Controller outputs (I/P converters)

The single-channel MTL7728+ with a voltage drop of 6.66V at 20mA is the recommended choice for most controller outputs. Higher-power versions are available: the MTL7728P+ (5.1V drop) is suitable for IIC applications; the MTL7729P+ (3.68V drop) for IIB applications.

For controllers with an output circuit separated from the 0V rail by the control transistor, the 2-channel MTL7787+ is the preferred choice as the return channel can handle up to 26.6V allowing the control signal to be turned off completely. The voltage drop is 8.1V at 20mA. A higher-power version of the latter, the MTL7787P+, is also available. The return channel of these barriers handle up to 26.4V and the maximum voltage drop is only 6.38V.

The MTL7787+ and MTL7787P+ are also suitable for controllers containing a resistor which enables the return current to be monitored for high-integrity operation.

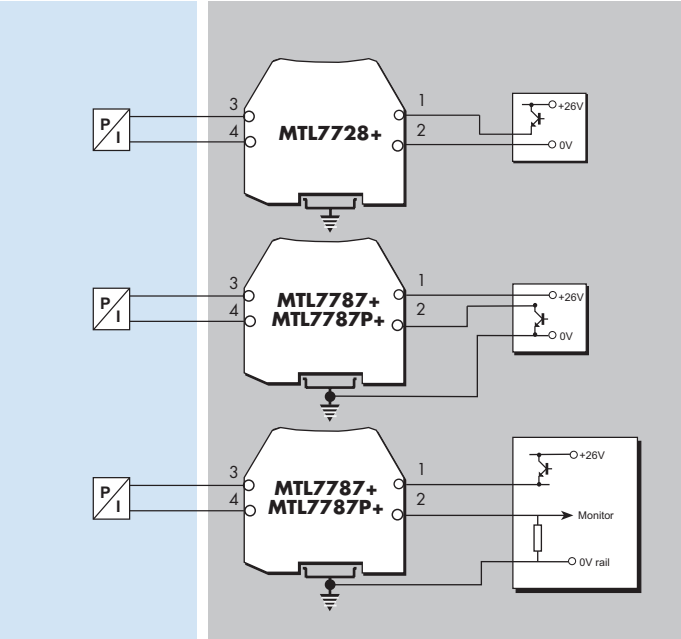

DIGITAL (ON/OFF) INPUTS

Switches

The normal choice is the MTL7787+/7787P+ with a regulated supply. The MTL774X modules are recommended for applications where an unregulated supply of up to 30V for relay output modules, or 35V for solid state output modules, is used.

The MTL7789+ offers a dual channel passive barrier for switch inputs where the input current for each channel is <10mA.

Switches / Proximity detectors

Eaton's MTL range of new switch/prox input barriers provide the user with a choice of relay and solid state outputs in single and dual channel versions.

The MTL7741 is single channel with a changeover relay output.

The MTL7742 has a single channel solid state switch that can be configured to switch from a power rail or down to ground. This is also ideal for high switching frequency applications.

The MTL7743 and MTL7744 are dual channel versions affording very high packing densities. Power must be provided to these modules using the power bus facility.

The MTL7745 is a single channel proximity input (or switch input if 'end of lines' resistors are fitted) with relay contacts providing switch and line fault status. The LFD relay contacts close when a fault is detected.

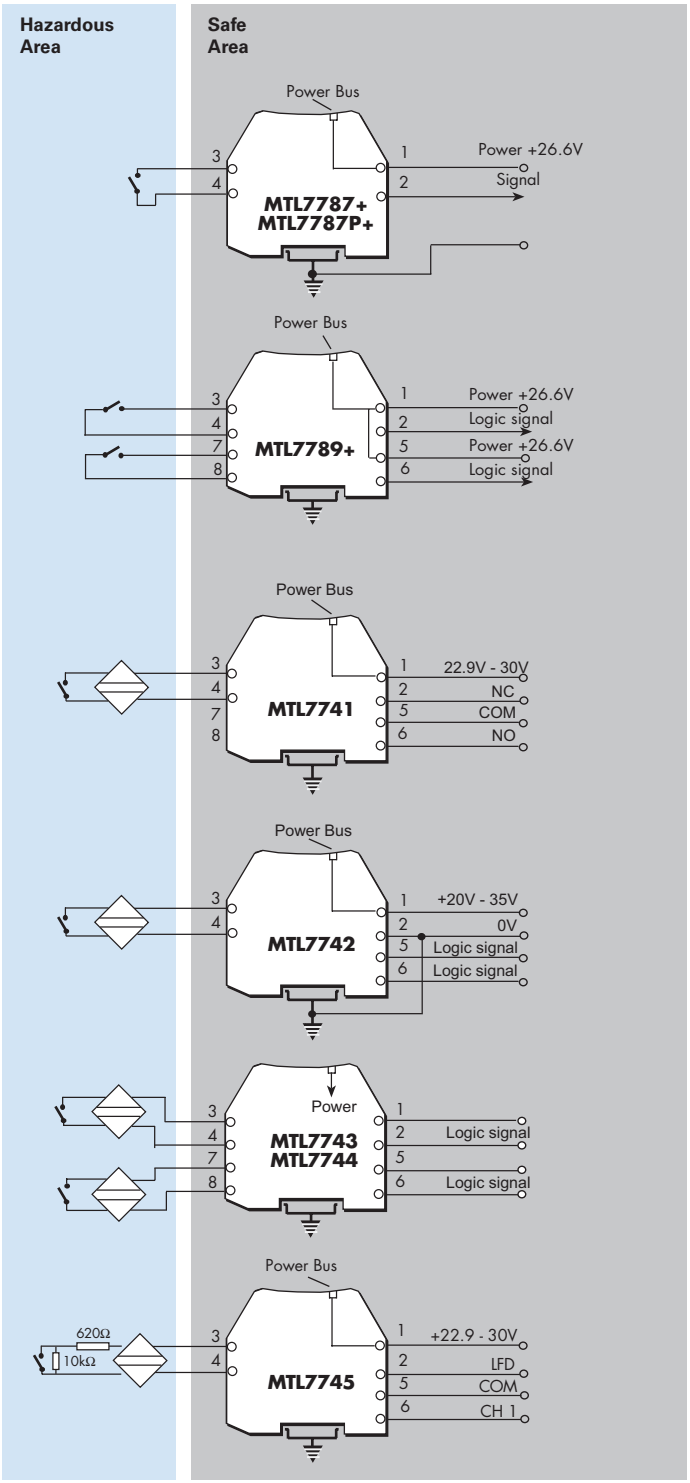

DIGITAL (ON/OFF) OUTPUTS

Alarms, LEDs, solenoids valves, etc
For these applications, the MTL7728+ is recommended. Higher-powered versions are available: the MTL7728P+ is suitable for IIC applications; the MTL7729P+ for IIB applications.

If the control switch is to earth, then the 2-channel MTL7787+ barrier should be used, or, alternatively, the MTL7787P+ higher-power version. If the supply is poorly regulated use the MTL7707+.

The MTL7707+ is recommended for applications where an unregulated supply of up to 35V is used.

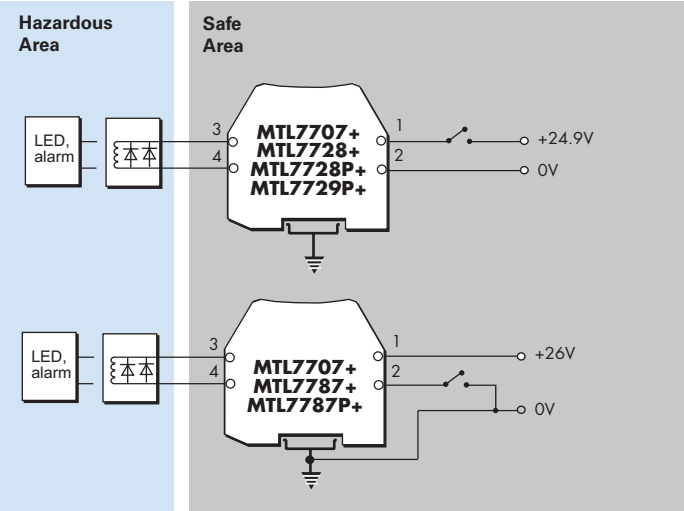

POSITIVE DC SYSTEMS

Low-level to 12V dc systems
The two channels of the MTL7764+ and MTL7767+ can be combined safely in IIC.

The MTL7764+ can be used for low-level logic return signals whilst the MTL7767+ is used for 6V dc and 12V dc systems.

18V dc systems
The single-channel MTL7722+ is recommended for 18V dc systems.

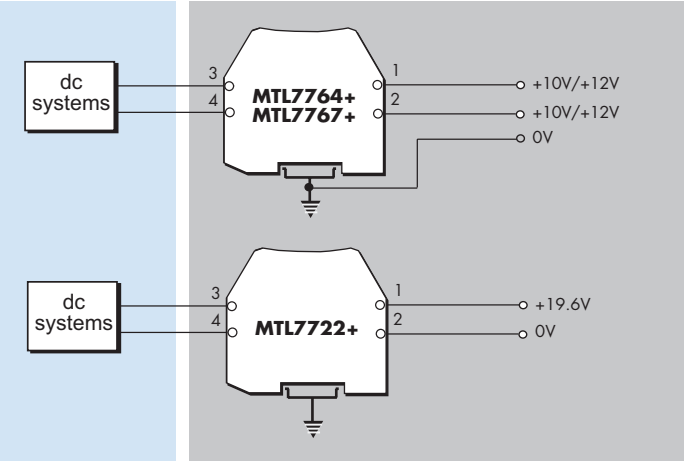

AC AND DC SYSTEMS

High-level ac and dc systems
The versatile star-connected MTL7765ac and MTL7778ac allow Vwkg to be developed from each channel to ground but only allow Vwkg to be developed between channels. This provides some common-mode voltage capability and can allow higher cable parameters to be used.

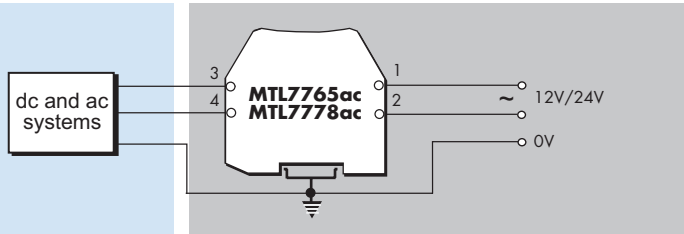

NEGATIVE AND FLOATING POWER SUPPLIES

Digital (on/off) outputs
The MTL7728– is used with a negative power supply and positive earth. Typically used for digital inputs or outputs, as shown.

The MTL7728-- can also be used with floating power supplies, for transmitters.

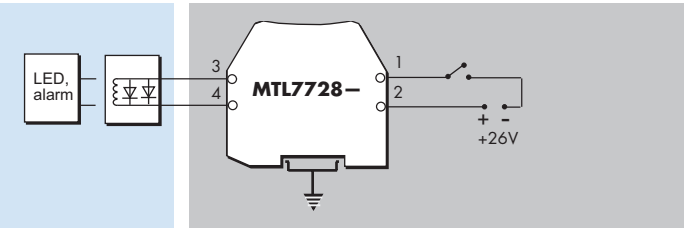

SPARE CABLE CORES AND SCREENS

The MTL7799 dummy barrier is used primarily for securing and earthing unused cables and screen connections. Hazardous area terminals 3 and 4 are internally connected to the DIN-rail mounting/earth connection. It also provides a power bus connection for direct connection of power for modules such as the MTL7743 and MTL7744 where no power supply screw terminal is provided.

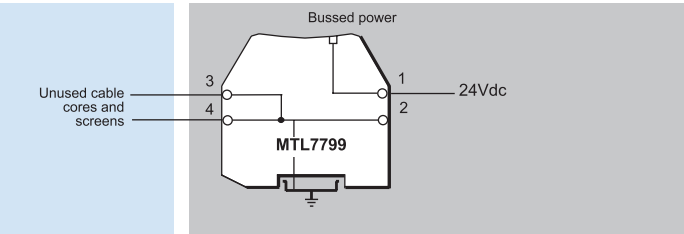

POWER BUS APPLICATIONS

The PB7700 power bus is invaluable for saving installation time and wiring when connecting a 24V dc power source to a number of barriers.

Typical applications include hazardous-area switches, 4/20mA transmitters and proximity detectors. The diagram illustrates the configuration for 4 barriers but up to 40 barriers can be served by this method.

The MTL7798 power feed module would normally be used with standard barriers such as MTL7787+ and MTL7787P+ because the current/voltage trip protection mechanism of the MTL7798 protects the fuses in the barriers.

The MTL7799 dummy barrier can be used instead of the MTL7798 for direct 'feed-through' connection of a 24V dc supply onto the power bus. Looping the power feed to each end of the bussed power allows the removal of individual barriers without loss of power to others in the chain.

Other units that can use the power bus facility:

- MTL7706
- MTL7707+
- MTL7707P+
- MTL7741
- MTL7742
- MTL7743
- MTL7744
- MTL7745
- MTL7787+
- MTL7787P+
- MTL7788+
- MTL7788R+
- MTL7789+

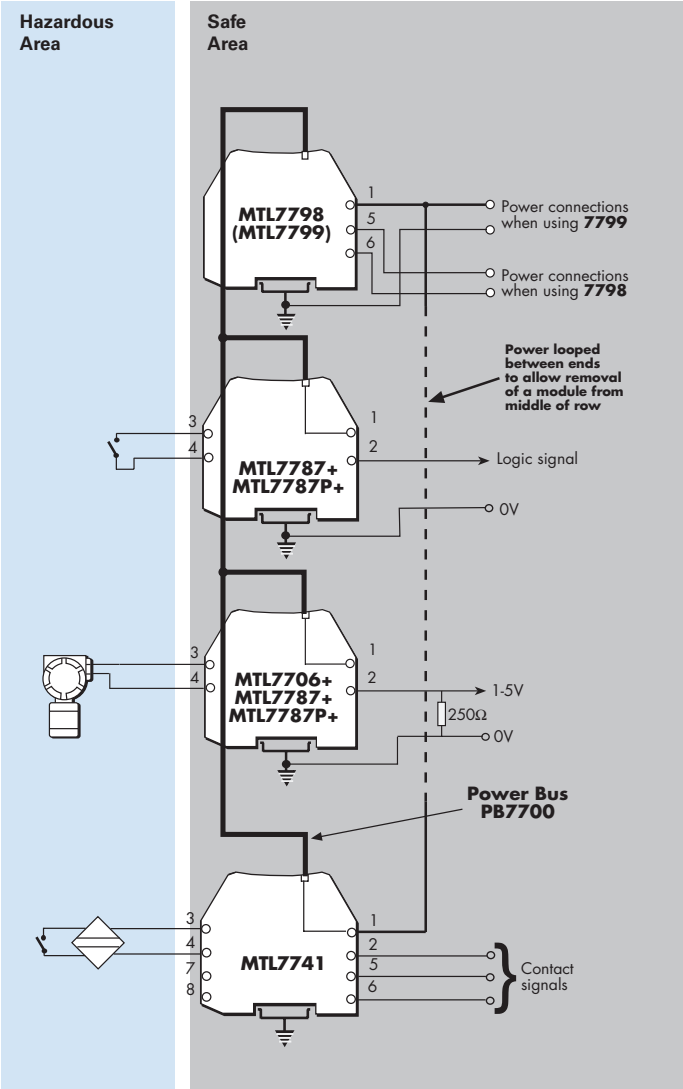

MTL7700 RANGE ACCESSORIES

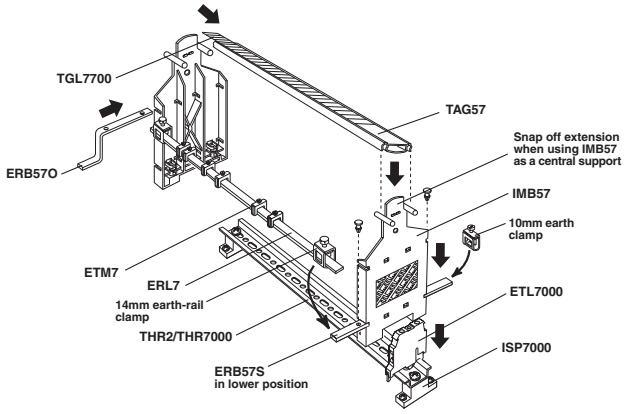

MOUNTING/EARTHING ACCESSORIES

MTL7700 range barriers mount easily and quickly onto standard DIN rail which also acts as the intrinsically safe earth.

THR2 Steel galvanized, standard DIN Rail

THR7000 plated rail
Specially nickel-plated T-section (35mm x 7.5mm) DIN rail for use in potentially corrosive atmospheres. Supplied in 1meter lengths.

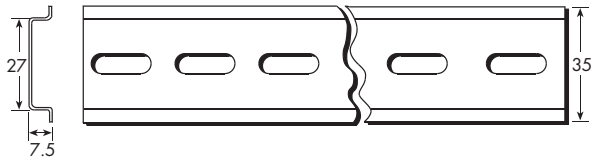

ISP7000 insulating spacers
Attached to the base of a DIN rail at either end or at intervals (depending upon DIN rail length) to isolate the IS earth from a structural earth.

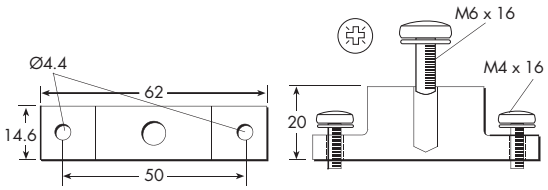

ERB57S Earth-rail bracket, straight
Nickel-plated; supplied with two push fasteners, one 14mm earth-rail clamp and one 10mm earth clamp for cables ≤16mm^2 (See ERB570).

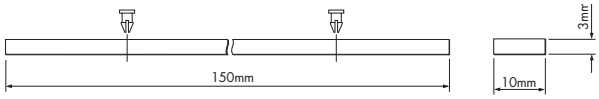

ETM7 earth terminal
For terminating cable screens and 0V earth returns and securing spare cores to the earth rail. A maximum of two ETM7s per barrier can be accommodated.

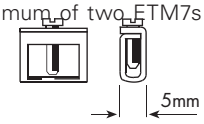

IMB57 Insulating mounting block
One required at each end of a tagging strip/earth rail. Suitable for low-profile (7.5mm) and high-profile (15mm) symmetrical DIN rail.

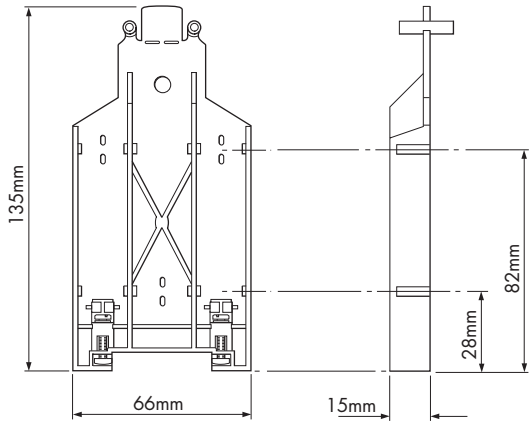

ERB57O Earth-rail bracket, offset
Nickel-plated; supplied with two push fasteners, one 14mm earth-rail clamp and one 10mm earth clamp for cables ≤16mm^2.

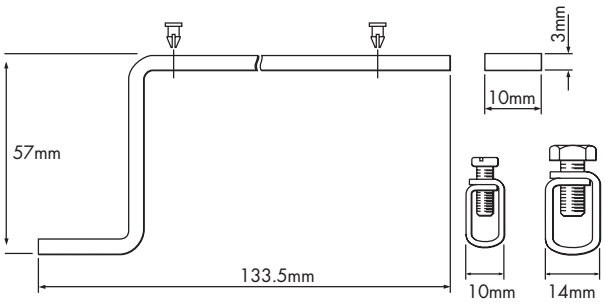

ETL7000 earth terminal
Provides connection for routing the IS earth from the DIN rail to an appropriate plant earth. Maximum cable cross-section is 10mm^2. Two recommended per discrete length of DIN rail. See instruction manual INM7700 for more details.

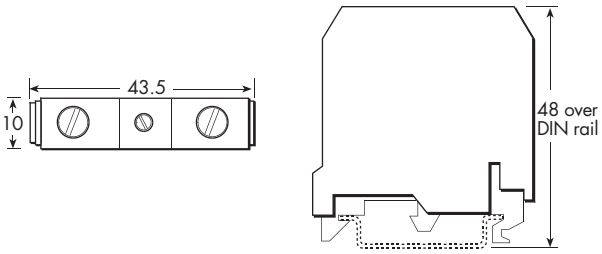

BPL7700 Power Bus link
When a number of barriers use a common power supply, the optional power link (BPL7700) can be used. Typical applications include hazardous area switches, solenoids and 4–20mA transmitters. The barriers it can be used with are the MTL7706, MTL7707+, MTL7787+, MTL7787P+, MTL7789P+ and MTL774X. See next page for further details.

TAGGING ACCESSORIES

Two methods of tagging are available which can be used separately or together:

1) **Individual barrier identification**
TH7700 barrier identifiers
TH7700 barrier identifiers are supplied clipped on to the tops of individual barriers to provide transparent holders for identification labels.

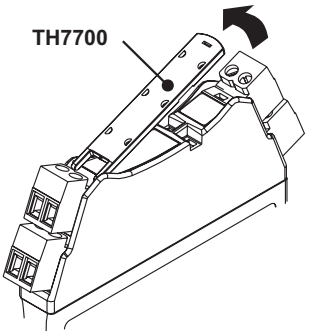

2) **Tagging strip method**
TAG57 Tagging strip, 1m length
Cut to size. Supplied with reversible tagging strip label suitable for either MTL5000 or MTL7000 range module spacing.

TGL7700 Tagging strip labels, set of 10 x 0.5m
For use with TAG57 tagging strip. Tags are reversible - one side for MTL7700, the other for MTL700.

MTL700 BUSBAR ACCESSORY

ADB700 Adaptor bracket, MTL7700
Tin-plated; supplied with two M4 screws and washers. For mounting an MTL7700 range barrier to an MTL700 busbar (EBB7).

Note: This is only to be used when the EBB7 is supported by IMB7 insulating mounting blocks, it should not be used with the smaller SMB7 mounting blocks.

HOW TO ORDER

MTL7700 barriers
Select by barrier number and polarity,
e.g. MTL7728+

Mounting accessories

THR2	Standard DIN-rail, 35 x 7.5mm
THR7000	T-section DIN-rail, specially-plated, 35 x 7.5mm, 1m length
ISP7000	Insulating spacer
ADB700	Adaptor bracket to convert MTL700

Standard earthing/earth-rail accessories

ETL7000	Earth terminal, DIN-rail mounted
IMB57	Insulating mounting block
ERB57S	Earth-rail bracket, straight
ERB57O	Earth-rail bracket, offset
ERL7	Earth rail, 1m length
ETM7	Earth terminal, pack of 50

Standard tagging accessories

TAG57	Tagging strip, 1m length
TGL7700	Tagging strip labels, set of 10 x 0.5m

Bussed power links

BPL7700	Pack of 100

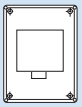

Enclosures

DX070	Enclosure, for MTL7700 x 5
DX170	Enclosure, for MTL7700 x 13

Spares (all in packs of 10)

SAF7712	Safe-area terminals 1 & 2
HAZ7734	Hazardous area terminals 3 & 4
SAF7756	Safe-area terminals 5 & 6
HAZ7778	Hazardous area terminals 7 & 8
TH7700	Tag holder

INM7700	Instruction manual, MTL7700 range
INA7700	ATEX information, MTL7700 range
INM57ENC	Instruction manual, MTL5000/7000 range Enclosures
CD7700...	Customer drawings

APPROVALS
(for the latest certificate information and cable parameters, see www.mtl-inst.com/certificates)

CORRELATION BETWEEN MTL7700 — MTL7000 — MTL700 BARRIERS (IIC)

Module No.	Bussed Power	MTL7000 Equivalent	MTL7000 Original Certificate Number(s)	MTL7000 ATEX Certificate Number(s)	MTL700 equivalent	MTL700 Original Certificate Number(s)	MTL700 ATEX Certificate Number(s)	Typical Application
MTL7710+/-	No	Half of MTL7162+	Ex95C2261	BAS99ATEX7285	MTL710+/-	Ex832452	BAS01ATEX7202	4/6V Systems
MTL7715+	No	N/A	N/A	N/A	MTL715+	Ex832452	BAS01ATEX7202	12V Systems
MTL7715P+	No	N/A	N/A	N/A	MTL715P+	Ex92C2373	BAS01ATEX7202	12V Systems
MTL7722+/-	No	MTL7122+/-	Ex95C2261	BAS99ATEX7285	MTL722+/-	Ex832452	BAS01ATEX7202	General Purpose
MTL7728+/-	No	MTL7028+/- MTL7128+/-	Ex95C2261	BAS99ATEX7285	MTL728+/-	Ex832452	BAS01ATEX7202	Analogue / Digital
MTL7728ac	No	N/A	N/A	N/A	MTL728ac	Ex832452	BAS01ATEX7202	General Purpose
MTL7728P+	No	MTL7128P+	Ex95C2261	BAS99ATEX7285	MTL728P+	Ex92C2373	BAS01ATEX7202	Analogue / Digital
MTL7755ac	No	MTL7055ac	Ex95C2261	BAS99ATEX7285	MTL755ac	Ex832452	BAS01ATEX7202	RTD, Grounded
MTL7756ac	No	MTL7056ac	Ex95C2261	BAS99ATEX7285	N/A	N/A	N/A	RTD, Grounded
MTL7758+/-	No	N/A	N/A	N/A	MTL758	Ex83453	BAS01ATEX7217	Active sensors,
MTL7760ac	No	N/A	N/A	N/A	MTL760ac	Ex832452	BAS01ATEX7202	Active sensors, Thermocouples
MTL7761ac	No	MTL7261ac	Ex95C2261	BAS99ATEX7285	MTL761ac	Ex832452	BAS01ATEX7202	Strain Gauges
MTL7761Pac	No	MTL7061Pac MTL7161Pac	Ex95C2261	BAS99ATEX7285	MTL761Pac	Ex92C2373	BAS01ATEX7202	Load cell
MTL7764+/-	No	MTL7164+/-	Ex95C2261	BAS99ATEX7285	MTL764+/-	Ex832452	BAS01ATEX7202	High resistance
MTL7764ac	No	MTL7264ac	Ex95C2261	BAS99ATEX7285	MTL764ac	Ex832452	BAS01ATEX7202	Strain / Level Gauges
MTL7765ac	No	N/A	N/A	N/A	MTL765ac	Ex832452	BAS01ATEX7202	General Purpose
MTL7766ac	No	N/A	N/A	N/A	MTL766ac	Ex832452	BAS01ATEX7202	Strain Gauges
MTL7766Pac	No	MTL7066Pac MTL7166Pac	Ex95C2261	BAS99ATEX7285	MTL766Pac	Ex92C2373	BAS01ATEX7202	Strain Gauges
MTL7767+	No	MTL7167+	Ex95C2261	BAS99ATEX7285	MTL767+	Ex832452	BAS01ATEX7202	Dual MTL715
MTL7779+	No	N/A	N/A	N/A	MTL779+	Ex832452	BAS01ATEX7202	Dual MTL728
MTL7787+/-	Yes	MTL7087+ MTL7187+	Ex95C2261	BAS99ATEX7285	MTL787S+	Ex832452	BAS01ATEX7202	Analogue / Digital
MTL7787P+	Yes	MTL7087P+ MTL7187P+	Ex95C2261	BAS99ATEX7285	MTL787SP+	Ex92C2373	BAS01ATEX7202	Analogue / Digital
MTL7788+	Yes	N/A	N/A	N/A	MTL788+	Ex832452	BAS01ATEX7202	Transmitters
MTL7788R+	Yes	N/A	N/A	N/A	MTL788R+	Ex832452	BAS01ATEX7202	1—5V systems
MTL7796+/-	No	MTL7096- MTL7196-	Ex95C2261	BAS99ATEX7285	MTL796+/-	Ex832452	BAS01ATEX7202	Vibration sensors

The given data is only intended as a product description and should not be regarded as a legal warranty of properties or guarantee.
In the interest of further technical developments, we reserve the right to make design changes.

Powering Business Worldwide

Eaton Electric Limited,
Great Marlings, Butterfield, Luton
Beds, LU2 8DL, UK.
Tel: + 44 (0)1582 723633 Fax: + 44 (0)1582 422283
E-mail: mtlenquiry@eaton.com
www.eaton.com

© 2024 Eaton
All Rights Reserved
Publication No.
EPS7700 Rev 17 150424

EUROPE (EMEA):
+44 (0)1582 723633 mtlenquiry@eaton.com
THE AMERICAS:
+1 800 835 7075 mtl-us-info@eaton.com
ASIA-PACIFIC:
+65 6 645 9888 sales.mtlsing@eaton.com