Instruction manual
MTL intrinsic safety solutions

April 2023
INM 7700 Rev 16

CROUSE-HINDS
SERIES

MTL7700 range

Shunt-diode safety barriers

Powering Business Worldwide

DECLARATION OF CONFORMITY

A printed version of the Declaration of Conformity has been provided separately within the original shipment of goods. However, you can find a copy of the latest version at -

http://www.mtl-inst.com/certificates

MINE SAFETY AND HEALTH ADMINISTRATION (MSHA) INFORMATION

Applicable MTL7700 Shunt Diode Safety Barrier Assemblies and installation conditions

The following MTL7700 range of Shunt Diode Safety Barrier Assemblies were submitted to the Mine Safety and Health Administration (MSHA) of the U.S. Department of Labor for acceptance as part of an MSHA approved permissible system or machine.

MTL7715+	MTL7715P+	MTL7755ac
MTL7760ac	MTL7761ac	MTL7765ac
MTL7766Pac	MTL7767+	MTL7787+/-

These Safety Barrier Assemblies were evaluated by MHSA and judged to meet the applicable requirements of Title 30 Code of Federal Regulations, Part 18.68 (30 CFR Part 18.68) provided that a relevant installation complies with the following conditions.

a) The installation shall preclude intermingling between intrinsically safe circuits, including their associated wires and cables, and all other circuits, wires, and cables.

b) The MTL7700 range of Shunt Diode Safety Barrier Assemblies must be securely mounted within a suitable dust-tight enclosure in a fresh air area of the mine or an explosion-proof enclosure.

c) The MTL7700 range of Shunt Diode Safety Barrier Assemblies must be grounded according to the manufacturer's instructions.

d) The equipment connected to the the input terminals of the barrier must not use or generate more than the maximum 120Vrms.

IMPORTANT NOTE

WARNING

This manual has content describing the use and installation of safety equipment. This equipment must be installed, operated and maintained only by trained competent personnel and in accordance with all appropriate international, national and local standard codes of practice and site regulations for intrinsically safe apparatus and in accordance with the instructions contained here.

- Environmental conditions: indoor use, pollution degree 2, altitude (up to 2000m) and humidity less than 90% non condensing.
- Electrical supply to be installation overvoltage category II
- If in doubt, refer to the certificate/catalogue or contact Eaton's MTL product line or your local representative for assistance

CONTENTS

PAGE

DECLARATION OF CONFORMITY i

MINE SAFETY AND HEALTH ADMINISTRATION (MSHA) INFORMATION i

ATEX/UKCA/IECEX SAFETY INSTRUCTIONS iv

1 OVERVIEW 1

2 DESCRIPTION 1

2.1 Introduction 1

2.2 MTL7700 range – barrier ranges 1

2.3 MTL7700 range – accessories 2

3 SAFETY CONSIDERATIONS 3

3.1 General requirements 3

3.2 Safety checks 3

4 INSTALLATION 3

4.1 General 3

4.2 Mounting/removing barriers 3

4.3 Installing accessories 3

5 WIRING CONNECTIONS 7

5.1 General 7

5.2 Barrier connections 7

5.3 Connections to plant earth 7

5.4 Connections to dummy barriers 9

6 MAINTENANCE 9

6.1 General 9

6.2 Routine inspection 9

7 FAULT-FINDING 10

7.1 Introduction 10

7.2 Power supply check 11

7.3 Barrier resistance test 11

8 EQUIPMENT AND BARRIER TESTS 11

8.1 Thermocouple and RTD tests 11

8.2 Barrier tests 11

8.3 Tests for Active Barriers 12

8.4 Test tables for passive barriers 14

9 APPENDIX A: TYPICAL WIRING CONNECTIONS FOR SPECIFIC APPLICATIONS 17-19

ATEX/UKCA/IECEx SAFETY INSTRUCTIONS

The following information is in accordance with the Essential Health and Safety Requirements (Annex II) of the EU Directive 2014/34/EU [the ATEX Directive - safety of apparatus), and Schedule 1 of the Equipment and Protective Systems Intended for Use in Potentially Explosive Atmospheres Regulations 2016 (UK S.I. 2016/1107) and is provided for those locations where the ATEX Directive or UKCA regulations are applicable.

General

a) This equipment must only be installed, operated and maintained by competent personnel. Such personnel shall have undergone training, which included instruction on the various types of protection and installation practices, the relevant rules and regulations, and on the general principles of area classification. Appropriate refresher training shall be given on a regular basis. [See clause 4.2 of IEC/EN 60079-17].

b) This equipment has been designed to provide protection against all the relevant additional hazards referred to in Annex II of the ATEX directive (such as clause 1.2.7) or Schedule 1 of the UK regulation (such as clause 13).

c) This equipment has been designed to meet the requirements of IEC/EN 60079-11.

Installation

a) The installation must comply with the appropriate European, national and local regulations, which may include reference to the IEC/EN code of practice IEC 60079-14. In addition, particular industries or end users may have specific requirements relating to the safety of their installations and these requirements should also be met. For the EU, Directive 1999/92/EC [the ATEX Directive - safety of installations} is also applicable. For the UK, the Dangerous Substances and Explosive Atmospheres Regulations 2002 (DSEAR) is also applicable.

b) This apparatus is an associated electrical apparatus and is normally mounted in a non-hazardous [safe] area. Specific apparatus described as Category 3 compliant may be installed in a Zone 2 location providing that the relevant installation conditions are met. When mounted in a Zone 2 location the apparatus must be provided with an enclosure, which offers an additional degree of protection appropriate to the area classification.

c) Unless already protected by design, this equipment must be protected by a suitable enclosure against:
   i) mechanical and thermal stresses in excess of those noted in the certification documentation and the product specification
   ii) aggressive substances, excessive dust, moisture and other contaminants.

Read also the Special Conditions for Safe Use (below) for any additional or more specific information.

Special Conditions of Safe Use for Zone 2 applications

a) When used in Zone 2, the equipment must be installed in an enclosure or environment that provides a degree of protection of at least IP 54 and meets the relevant material and environmental requirements of EN 60079-0 and EN 60079-15.

b) The equipment must not be inserted or removed unless either:
   i) the area in which the equipment is installed is known to be non-hazardous or
   ii) the circuit to which it is connected has been de-energised.

c) The 24V supply for this equipment must be derived from a regulated power supply complying with the requirements of European Community Directives.

d) The relay contacts of MTL7741, MTL7743 and MTL7745 must switch no more than 30Vac (30Vdc) when in a Zone 2 environment.

e) Special Conditions will vary on individual certificates.

Inspection and maintenance

a) Inspection and maintenance should be carried out in accordance with European, national and local regulations which may refer to the standard IEC/EN 60079-17. In addition specific industries or end users may have specific requirements which should also be met.

b) Access to the internal circuitry must not be made during operation.

Repair

a) This product cannot be repaired by the user and must be replaced with an equivalent certified product.

Marking

Each device is marked in compliance with the EU Directive and UK regulation, and CE and UKCA marked accordingly.

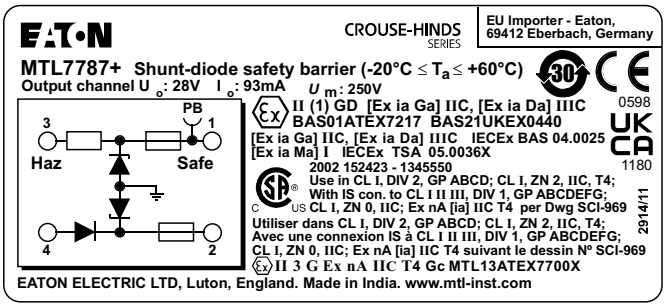

MTL7700 range
Shunt-diode safety barriers

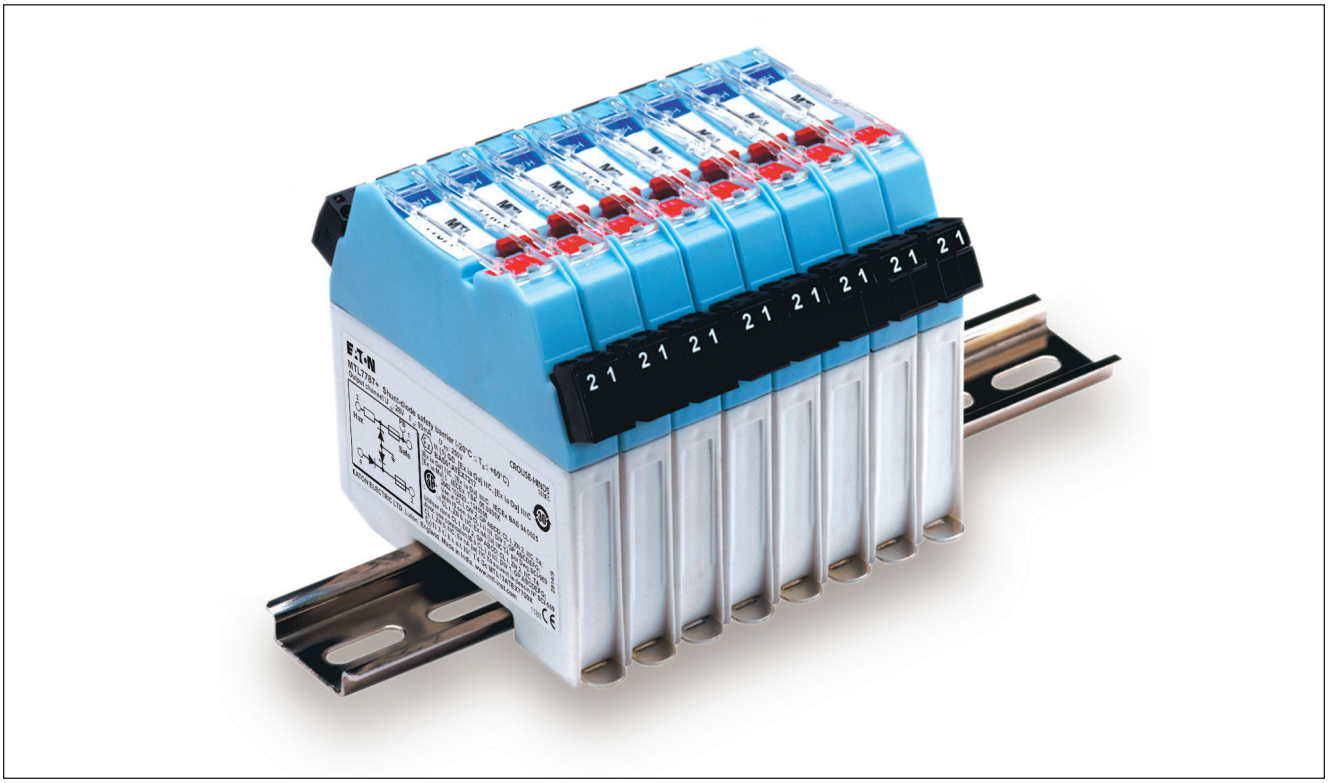

Figure 1: MTL7700 range of shunt-diode safety barriers

1 OVERVIEW

This instruction manual contains all information needed to install, maintain, fault-find and test MTL7700 range of shunt-diode safety barriers.

Section 3 includes a checklist of essential safety factors that must be considered when using MTL7700 range of barriers as intrinsically safe (IS) interfaces between safe and hazardous areas. Read section 3 before beginning installation. Users within the European Community should also refer to the website for multiple language safety instructions.

It is assumed that all necessary system design, specification and engineering factors have been taken into account BEFORE installation work begins. To assist pre-planning, the following publications covering the theory, design, application, specifications and certification of shunt-diode safety barriers are available:

AN9003	Application Note: A user's guide to intrinsic safety
AN9007	Application Note: *A user's guide to MTL700 range of shunt-diode safety barriers*
IS catalogue	The IS catalogue includes detailed specifications of all MTL7700 range of barriers and accessories
IS certificates	Copies of Baseefa, FM and CSA IS apparatus and system certificates for MTL7700 range of barriers

If not supplied with the product, these publications are available either from our website (www.mtl-inst.com) or on request from your local office.

2 DESCRIPTION

2.1 Introduction

MTL7700 range of 'fourth-generation' intrinsically safe shunt-diode safety barriers are innovative successors to the MTL700 range.

MTL7700 range of barriers are 1-, 2- or 3-channel devices that use intrinsically safe explosion-protection techniques to pass electrical signals between safe and hazardous areas, whilst limiting transferred energy to a level that cannot ignite flammable atmospheres.

Connected in series with wiring entering any hazardous area on process plant, MTL7700 range of barriers prevent explosions in all normally occurring explosive atmospheres – including mixtures of air with flammable gases, vapours, dusts and fibres – if a fault or faults develop in the safe area.

2.2 MTL7700 range – barrier ranges

The range is based on a choice of models which, between them, cover virtually all applications – including the protection of installations incorporating uncertified devices known as 'simple apparatus' (eg, switches, thermocouples, resistive sensors, photocells and LEDs) or separately certified 'energy-storing' or 'voltage-producing apparatus' (eg, ac sensors, proximity detectors, transmitters and current-to pneumatic (I/P) converters. Being intrinsically safe, shunt-diode barriers enable maintenance work or calibration to be carried out 'live' without additional precautions. To simplify selection, several 'key' barriers (see table 1) are highlighted as meeting the majority of process control requirements.

Type	Application	Key barriers	
Analogue input (low-level)	Resistance temperature detectors Thermocouples, ac sensors	**7755ac** **7756ac** **7760ac**	
Analogue output	Controller outputs, one line earthed Controller outputs, neither line earthed	**7728+** **7787+**	
		dc power supply	
		26V	**20-35V**
Analogue input (high-level)	Transmitters, 2-wire, 4–20mA	**7787+**	**7706**
Digital (on/off) input	Switches	**7787+**	**7707+** **7741-44**
Digital (on/off) output	Solenoids, alarms, LEDs	**7728+**	**7707+**

Table 1: MTL7700 range of key barriers

2.3 MTL7700 range – accessories

MTL7700 range of barriers mount directly onto DIN-rail. A comprehensive selection of mounting, tagging, power and earthing accessories is available. Installation details are given in section 4.3.

Essential accessories

The following are usually considered essential for mounting and earthing MTL7700 range of barriers:

DIN-rail (eg, THR2 or THR7000)
Insulating spacers (eg, ISP7000)
Earth terminal (eg, ETL7000)

The tagging systems for individual modules and columns of barriers are described here. They are shown below under Tagging accessories for columns of barriers.

Mounting accessories (figure 2)

THR2 Standard DIN-rail, 35 x 7.5mm, (in 1m lengths)

THR7000 Nickel-plated DIN-rail, 35 x 7.5mm, for use in potentially corrosive atmospheres (in 1m lengths)

ISP7000 Insulating spacer: attaches to the base of a DIN-rail to isolate the IS earth from a structural earth

Tagging accessories for individual barriers (figure 2)

TH7700 Tag holder for mounting on the top of an individual barrier

Tagging accessories for columns of barriers (figure 2)

TAG57 Tagging strips for mounting over a column of barriers, for marking barrier locations. Supplied (with labels) in 1m lengths for cutting to size.

TGL7700 Spare labels for use with TAG57 tagging strips: 0.5m strips, supplied in sets of 10.

IMB57 Tagging strip supports. Two needed for each tagging strip. It can also be used as centre support by breaking off the top end tab.

Power accessories (figure 3)

BPL7700 Power link for feeding 24V dc to a maximum of 40 barriers in a single column from an MTL7798 power feed module or MTL7799 Dummy module.

Earthing accessories (figure 3)

ETL7000 Earth terminal providing connections for routeing the IS earth from the DIN-rail to an appropriate plant earth. Two recommended for each length of DIN-rail.

ERB57S Nickel-plated straight earth-rail bracket, supplied with two push fasteners, one 14mm earth-rail clamp and one 9mm earth clamp < 16mm^2.

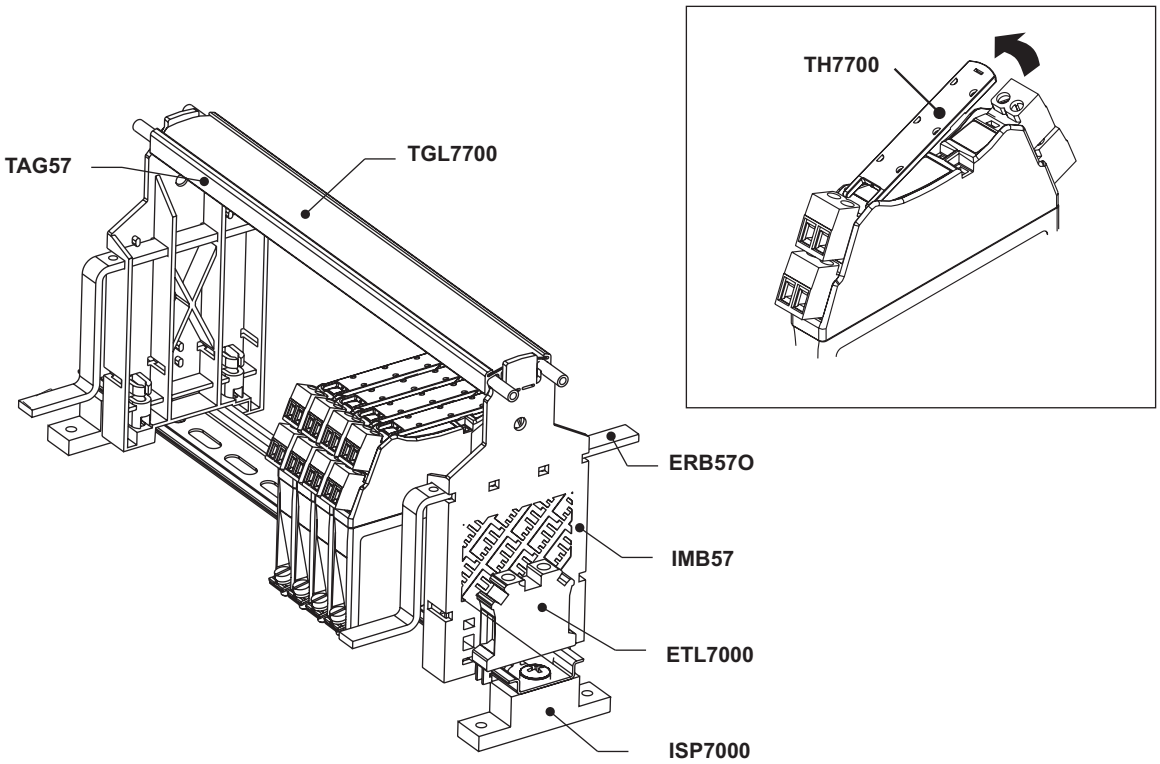

Figure 2: MTL7700 range of mounting and tagging accessories

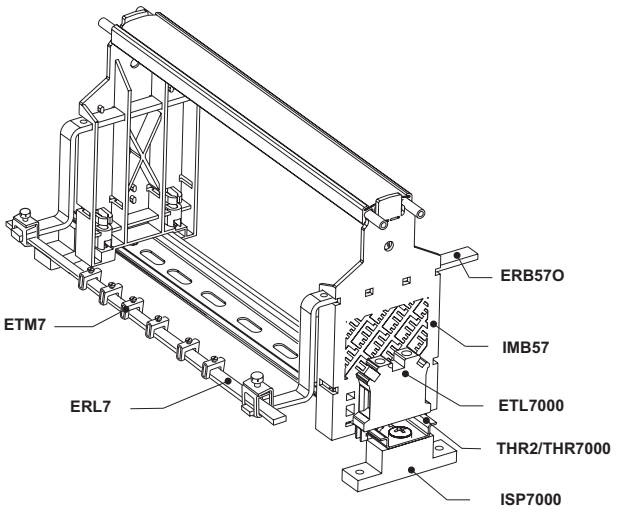

Figure 3: MTL7700 range of earthing accessories

Note: *Module earth terminals may be used for cable screen earth connections. See Figure 17*

ERB57O	Nickel-plated offset earth-rail bracket, supplied with two push fasteners, one 14mm earth-rail clamp and one 9mm earth clamp < 16mm^2.
ERL7	Nickel-plated 3 x 10mm earth rail supplied in 1m lengths. Provides earthing facilities for cable screens and 0V earth returns, additional to those provided on the module earth foot.
ETM7	Earth terminal (5mm wide) for attachment to an ERL7 earth rail, for terminating cable screens and spare cable cores.

3 SAFETY CONSIDERATIONS

3.1 General requirements

All installers of shunt-diode barriers should be familiar with the installation instructions provided by nationally accepted codes of practice, eg, BS EN 60079-14 for the UK, or a recommended practice, eg, ANSI/ISA-RP 12.6 for the USA.

Users within the European Community should also refer to the supplied publication:

INA7700	MTL7700 range Instructions for Safe Use

3.2 Safety checks

Table 2 itemises the essential checks that should be carried out to ensure the safety of a barrier installation. Use the checklist to prevent important safety considerations being overlooked when installing, commissioning, modifying or servicing an installation of MTL7700 range of barriers. Check the list both before and after a barrier system has been installed, the final check being made by someone other than the person(s) who carried out the installation work. Each item in the list is cross-referenced to the appropriate section of the manual.

For Factory Mutual (FM) based installations see FM certification information.

4 INSTALLATION

4.1 General

MTL7700 range of barriers clamp directly onto standard T-section DIN-rail (DIN EN 50 022). The simple mounting procedure for barriers is described in section 4.2 and for accessories in section 4.3.

4.1.1 DIN-rail length

BEFORE mounting the barriers, make sure the rail length is sufficient for the proposed number of barriers and for other mounting accessories. As a guide, on a given length of DIN-rail, allow space (length) for:

a)	Barrier packing pitch:	12.6mm
b)	ETL7000 earth terminals:	10mm each (minimum of two)
c)	IMB57 tagging strip support (if specified)	16.0mm (minimum of two)
d)	ISP7000 insulating spacer (if specified)	14.7mm (minimum of two)*
e)	ERB57S or O earth-rail mounting bracket (if specified)	8 mm (minimum of two)

* See Note in section 4.3.2

Make sure that there is sufficient clearance between the DIN-rail and any possible obstruction (eg, other columns of barriers) to remove barriers and install accessories such as ERB57S/O earth rails.

Provide sufficient height for IMB57 tagging strip supports and ISP7000 insulating spacers when fitted.

As a guide, refer to figure 4 (dimensions of an individual barrier) and figure 5 (clearances needed for accessories).

4.2 Mounting/removing barriers

MTL7700 range of barriers clamp directly onto T-section DIN-rail, earthing the barrier through the rail.

a) Hook the hazardous-area end of the mounting/earthing clamp over the hazardous-area flange of the DIN-rail (figure 6).

b) Push the safe-area end of the barrier firmly down by hand until it clicks into place.

c) Check that the barrier is securely clamped into place (see notes below).

d) To remove a barrier (figure 7), use the tip of a screwdriver (with a blade width of 4 to 5mm, minimum shaft length 60mm) to ease the metal clip at the base on the safe-area end outwards until the barrier is freed and can be removed easily by unhooking the hazardous-area end.

Notes

1: Make sure the barrier is properly clamped onto the rail to ensure the essential earth connection. In a row of barriers, one end of an improperly mounted barrier will stick up slightly.

2: Once an MTL7700 barrier is fitted, its mounting/earthing foot grips the DIN-rail strongly in order to maintain positional stability and create a high-integrity earth bond. The unit should not be forced along the rail. If it is necessary to reposition a barrier, detach it from the DIN-rail and re-attach it in the correct location. Where minor repositioning is needed, relieve the pressure on the spring of the mounting foot with a screwdriver and ease the unit into place.

4.3 Installing accessories

See section 2.3, figure 2 and figure 3 for brief details of the accessories available for use with MTL7700 range of barriers. More information and installation details (where relevant) for the various accessories are detailed in the following sections:

Mounting accessories	Section 4.3.1 to 4.3.
Earthing accessories	***Section 4.3.3, 4.3.4***

Item no.	Refer to section:	Action
1	3.1	Before beginning installation, check that the safety documentation confirms that the proposed system is fully certified (if applicable) and complies with the recommendations contained in the relevant sections of IEC 60079-14 for the gas group, temperature classification and area classification required.
2	4.1/6.2	Make sure the barriers are of the correct type and polarity as specified in the safety documentation.
3	4.1	Make sure all barriers are mounted the right way round and are properly attached so that the essential earth contact is made securely in accordance with the safety documentation and in compliance with the recommendations of IEC 60079-14.
4	5.3/6.2	Measure the resistance between the barrier earth DIN-rail and the main power system earth and make sure it does not exceed the maximum permitted resistance specified in the safety documentation.
5	4.1/6.2	Inspect carefully all cables connected between the barriers and the hazardous-area equipment, making sure the cables are the type specified by the safety documentation and that they are connected to the correct terminals.
6	5/6.2	Make sure all hazardous-area cables are well secured and are segregated from all other cables.
7	5	Make sure the permitted cable parameters for hazardous-area circuits are not exceeded (see relevant certificate or INA7700).
8	5	Make sure all hazardous-area apparatus and cables are either earth-free or correctly bonded with an equipotential conductor.
9	5.3/6.2	Make sure all hazardous-area cables and cable screens are terminated correctly, the latter preferably via earth foot on the hazardous side of each barrier or via ERL7.
10	5.4	Make sure all unused hazardous-area cables are terminated by a dummy barrier (MTL7799), earth rail (ERL7) or otherwise safely connected to earth.
11		Make sure all hazardous-area energy-storing devices are independently and appropriately certified.
12	4.1/ 4.3.5/ 4.3.6	Inspect all tagging or identification labels and make sure they relate to the correct barrier types, polarities and circuit loop numbers.
13	5/6.2	Inspect carefully all cables connected to the safe-area equipment and make sure they are connected to the safe-area terminals of the barriers.
14	5.3	Make sure that no safe-area equipment is supplied from (or includes) a source of potential with respect to earth that exceeds 250V rms or 250V dc under normal or fault conditions unless specifically permitted by the safety documentation.
		***Note**: One phase of a 3-phase supply of up to 440V is permitted as its value is equivalent to 250V rms.*
15		Make sure all barriers are protected adequately against moisture, dust, dirt, vibration, excessive temperatures, physical damage and unauthorised modifications

Table 2: Safety checklist

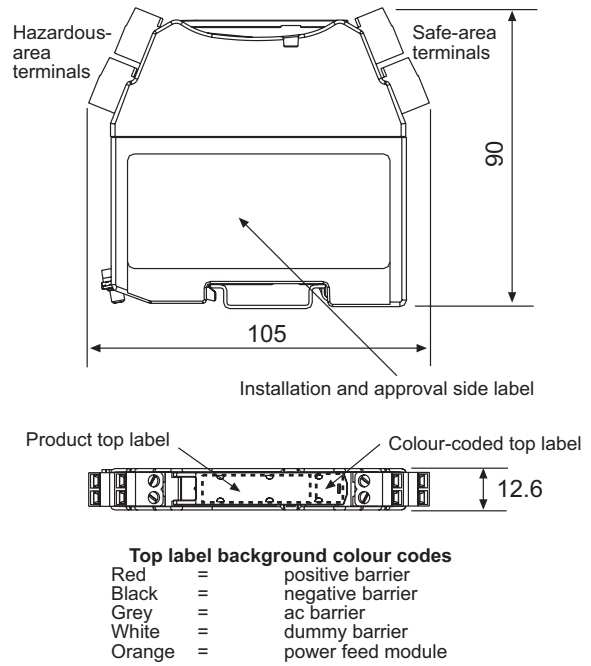

Figure 4: Dimensions (mm) of an MTL7700 range of barrier

Tagging accessories	**Section 4.3.5, 4.3.6**
Power links	**Section 4.3.7, 4.3.8**

4.3.1 DIN-rail (THR2 and THR7000)

Eaton can supply both standard (THR2) and plated (THR7000) low-profile T-section DIN-rail. Although standard DIN-rail maintains a high-integrity earth in normal conditions, for aggressive environments Eaton provides THR7000 nickel-plated DIN-rail. Both types are supplied in 1m lengths for cutting to size as necessary. Although there is no strict requirement for the DIN-rail to be isolated from earthed surfaces, it is advisable, in order to minimise the possibility of the earth circuit being invaded by fault currents which might interact adversely with other systems. ISP7000 insulating spacers are a convenient method of insulating the DIN-rail. It is much easier to install insulating spacers during the initial build, than to discover later that an equipped and running installation must be modified.

4.3.2 Insulating spacers (ISP7000)

When used, ISP7000 insulating spacers are attached to each end of the DIN-rail and at intervals depending upon the length of the rail. It is recommended that spacers be mounted at 300mm intervals on low-profile (7.5mm) DIN-rail and at 500mm intervals on high-profile (15mm) rails – see figure 8. The spacers are provided with suitable screws for attaching to both the DIN-rail and the mounting surface, which will need to be suitably drilled and tapped for the purpose. Install each spacer as follows (figure 9):

a) On the mounting surface, drill and tap two holes for M4 screws.

b) Attach the spacer to the surface with the two M4 x 16 screws provided.

c) Drill an M6 clearance hole (6.5mm) in the centre of the base of the DIN-rail (if not already suitably slotted)

d) Attach the DIN-rail to the spacer with the M6 x 16 screw provided.

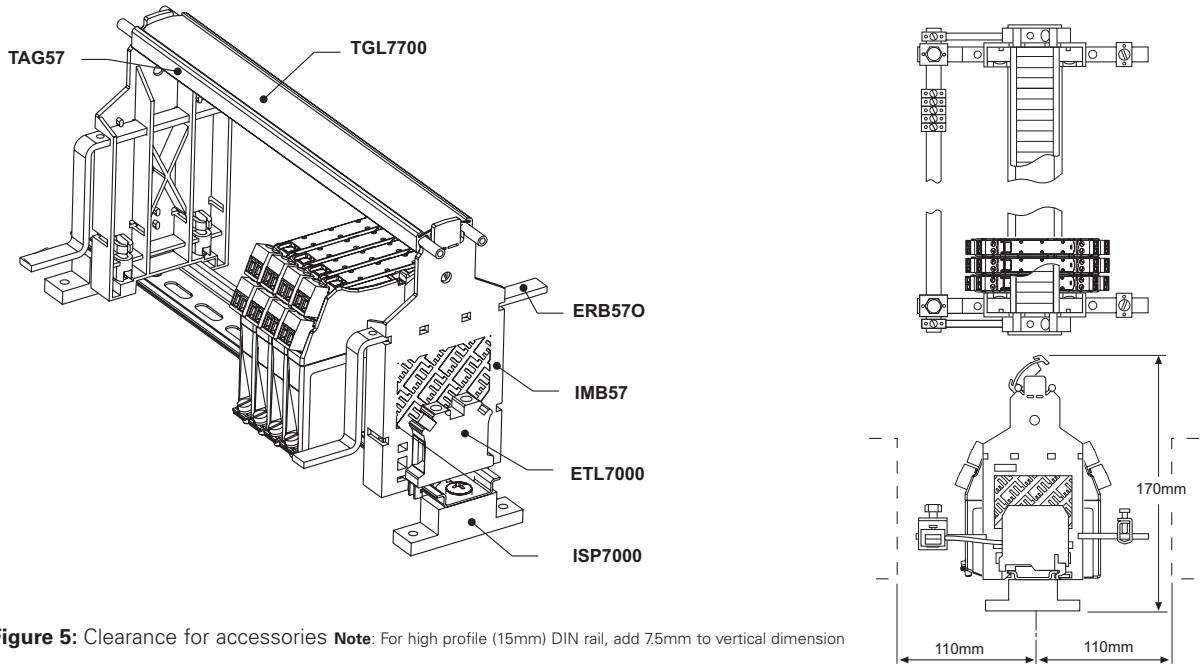

Figure 5: Clearance for accessories **Note**: For high profile (15mm) DIN rail, add 7.5mm to vertical dimension

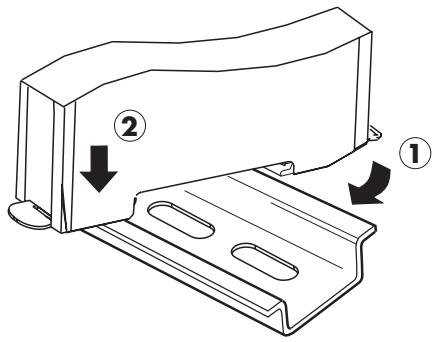

Figure 6: Clamping an MTL7700 range of barrier on to a DIN-rail

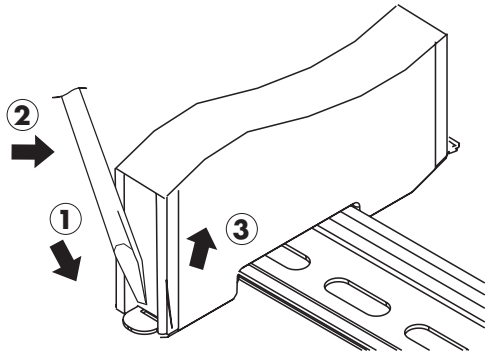

Figure 7: Removing an MTL7700 range of barrier from a DIN-rail

4.3.3 DIN-rail earth terminal (ETL7000)

See figure 10. For those applications (the majority) in which the IS earth is NOT routed through the mounting surface, connections for routing the IS earth from the DIN-rail to an appropriate plant earth are made through earth terminals (ETL7000) clamped onto the DIN-rail. Two terminals are recommended, one at either end of a column of barriers, to provide redundancy and to simplify earth testing procedures.

WARNING: Apart from rare occasions when the mounting surface carries the IS earth, the ONLY method of providing the IS earth connection from any one column of MTL7700 range of barriers is from ETL7000 earth terminals. Never make the plant IS earth connection to the earth screen on any individual barrier: this is MANDATORY. See also section 5.3.

ETL7000 terminals are attached to the rail as follows. Ensure the same security of the earth connection to the rail as for the barriers themselves (see section 4.2):

a) Hook the fixed end-clamp of the terminal over one flange of the DIN-rail.

b) Press the body of the terminal downwards until the pivoting end-clamp engages the other flange of the DIN-rail.

c) Clamp the terminal firmly into place by tightening the centre screw.

d) Important: wire up the earth terminal as given in section 5.3.2.

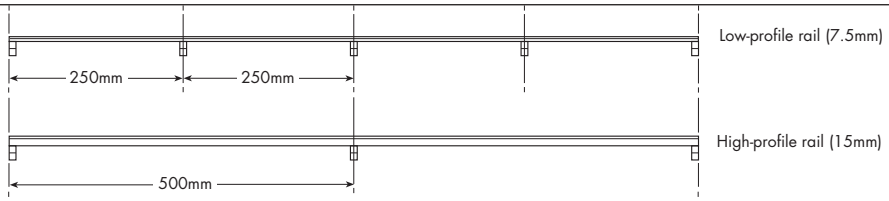

Figure 8: Maximum DIN-rail spans between ISP7000 spacers

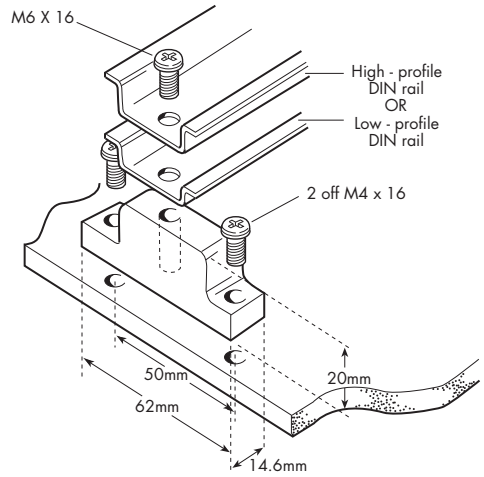

Figure 9: Mounting ISP7000 insulating spacers

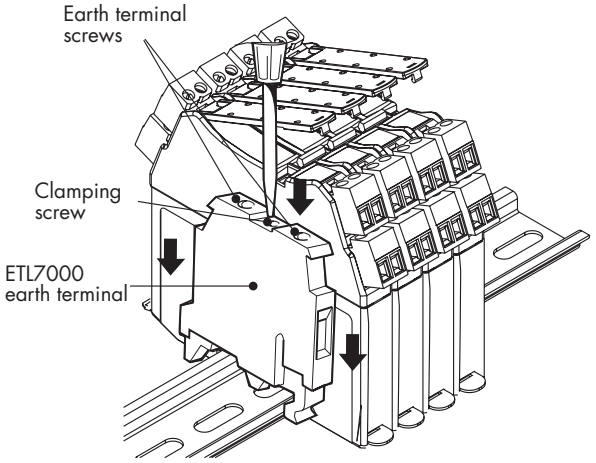

Figure 10: Mounting an ETL7000 DIN-rail earth terminal

4.3.4 Earth rail assembly (ERL7/ETM7/ERB57S/O)

A screw terminals on each barrier is available for terminating cable screens and 0V returns. An alternative is provided by an earth rail assembly (figure 12). This consists of two IMB57's, ERB57S or O, mounting blocks (one for each end of a column of barriers), a length of ERL7 earth rail (supplied in 1m lengths for cutting to size), and ETM7 terminals for connecting cable screens or 0V returns to the rail.

Install the earth rail assembly as follows:

a) Hook the loose end-clamps of the IMB57 mounting blocks over the flanges of the DIN-rail at each end of the row of barriers.

b) Making sure the blocks are flush with the end barriers or tagging strip supports, clamp them firmly into place by tightening the screws at the base of the blocks and fit 2 off ERB57O or S into supports.

c) Slide the number of ETM7 terminals required for connections onto the length of ERL7 rail needed for the assembly.

d) Important: wire up the earth rail assembly as given in section 5.3.3.

4.3.5 Barrier identifiers (TH7700)

TH7700 tag holders (figure 11) are clipped onto the tops ofindividual barriers to provide transparent holders for identification labels

a) Slide the required label in between the top and lower parts of the TH7700

b) Push the tag holder downwards until it clips into place.

c) To unclip a tag holder, lever up the far end above terminals.

Note: *Early versions of TH7700 are hinged on two small locating pins. Later versions are hinged by locating the clips at the hinged end into the rectangular appartures on the barrier body. The later design can be retrofitted on early modules by removing the hinge pins with a knife.*

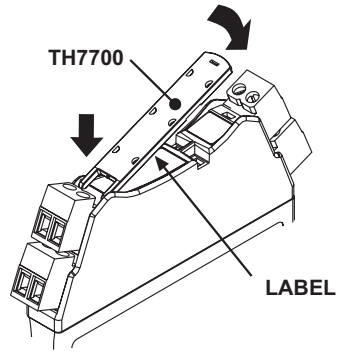

Figure 11: Installing a TH7700 barrier tag holder

4.3.6 Tagging strip assemblies(IMB57)

The tagging strip assembly (figure 12) identifies the location of individual barriers, ensuring that they are replaced correctly after removal for maintenance or testing. Once installed, the tagging strip pivots upwards to provide access to, and allow removal of, individual barriers.

Each assembly uses two tagging strip supports (IMB57), a tagging strip (TAG57) and tag labels (TGL7700).

The assembly installation procedure is:

a) **IMB57 tagging strip support.** Making sure that the vertical slots are on the hazardous-area side, hook the loose end-clamps of each IMB57 tagging strip support over the flanges of the DIN-rail at each end of the group of barriers.

b) Make sure that the tagging strip support is flush with the end barrier in the row.

IMB57 tagging strip support. Clamp firmly in place by tightening the two screws located at the foot of each support.

c) Remove any clic rivets from the tagging strip and slide out the label.

d) Measure the distance between the top inside faces of the two tagging strip supports.

e) Cut the tagging strip and label to this length with a hacksaw.

f) Annotate the tagging strip label as required and slide it back into the tagging strip. Divisions on label strips are 12.6mm wide, the pitch of individual barriers.

g) Clip the tagging strip onto the lugs on top of the tagging strip supports.

4.3.7 Power bus (BPL7700)

For details on using and installing a power bus, see section 5.2.3.

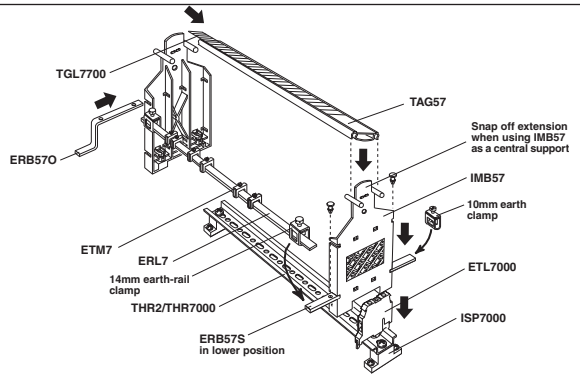

Figure 12: Mounting earthing and tagging accessories

5 WIRING CONNECTIONS

5.1 General

This section describes wiring connections as follows:

a) Barrier connections	Section 5.2
b) Connections to plant earth	Section 5.3
c) Connections to dummy barriers	Section 5.4

5.2 Barrier connections

Each barrier has 4 or 8 terminals, 2 or 4 on each side, allocated as follows:

Safe area

Terminals 1,2,5 and 6	Safe-area power and signal lines	Sections 5.2.1 and 5.2.2

Hazardous area

Terminals 3,4,7 and 8	Hazardous-area signal lines	Section 5.2.1

Torque the screw terminals to 0.4Nm.

5.2.1 Signal line connections

Connect signal lines to the screw terminals at both sides of the barrier (1 and 2 and/or 5 and 6 at the safe-area side, 3 and 4 and/or 7 and 8 at the hazardous-area side). The safe-area terminal 1 is also used as a power connection when power is provided from the safe area (see section 5.2.2 for details).

Clearly segregate hazardous-area and safe-area cabling as defined by relevant codes of practice, and route cabling to the barriers through clearly separated and identified conduits or trunking. Deal with spare cable cores or screens as described in section 5.2.3.

Before making any signal connections from the hazardous area, make sure any energy-storing devices (ie, devices NOT classified as 'simple apparatus') are certified as being compatible with the barriers to which they will be connected. Check also that the connecting cables conform with the cable types specified by the safety documentation and that the maximum cable parameters specified in IS catalogue are not exceeded. In general, cable parameters are unlikely to present problems except in installations where cables longer than 500m are called for in IIC applications.

Do not connect barriers to safe-area equipment that is supplied from (or contains) a source of potential with respect to earth that is greater than 250V rms or 250V dc under normal or fault conditions, unless this is specifically permitted by the safety documentation. This limitation does not apply to safe-area equipment fed by a three-phase 440V neutral earth supply.

See Appendix A for examples of wiring connections for specific applications.

5.2.2. Power supply connections general considerations

Take care that if barriers are connected to a safe-area power supply, connections are made correctly. If the internal safety fuse blows, it will destroy MTL7700 barriers. See Appendix A for specific connections for individual barriers and applications.

5.2.3 Bussed Power applications and connections

When a number of barriers use a common power supply, the optional power link (BPL7700) can be used. Typical applications include hazardous-area switches, solenoids and 4–20mA transmitters; and the barriers it can be used with are the MTL7706, MTL7707+, MTL7787+, MTL7787P+ and MTL774x. See figure 14 for a typical power link installation applied to hazardous-area switches.

Up to 40 barriers can be linked using the power links. The link itself is supplied from a power feed module (MTL7798). The MTL7798 power feed module is provided with a trip circuit which protects the barriers by switching off their supply if a fault (such as an overvoltage) occurs in the power source. The state of the module is indicated by one of two LED indicators:

a) Green	ON when supply is normal and being passed to the barriers.
b) Red	ON when the trip mechanism is activated indicating a fault.

After a fault has been indicated, the module can be reset by disconnecting the main power supply.

Install the power links as follows (figure 13):

a) Mount an MTL7798 power feed module on the DIN-rail at one end of the column of barriers being supplied.

b) Connect a safe-area 20–26V dc supply to terminals 5 and 6 of the power feed module.

c) select the number of links required.

d) Lift the tag holders to gain access to the power link connectors and insert the links (figure 13).

e) Close the tag holders.

f) To replace the barrier, lift the identifiers either side of the appropriate barrier to check which one is linked, remove the link, replace the barrier and re-insert the link and close the identifiers.

WARNING

Do not remove bussed power links with power applied if installed in FM Div 2 / ATEX Zone 2

5.2.4 Spare cores/screens/0V returns: connections

Unused cores should be connected to 0V. Terminals on the earth foot simplify this.

5.3 Connections to plant earth

5.3.1 General considerations

A barrier installation must be earthed properly for correct and safe operation. Care must be taken that individual barriers are correctly mounted so that the earth connection with the DIN-rail is secure.

An installation must, in turn, be connected to a suitable plant high-integrity earth. This should be done by connecting suitable conductors to ETL7000 earth terminals (see section 5.3.2). It is also usually advisable to make sure that the DIN-rail is isolated from any possible enclosure earths by separating it from the mounting surface with ISP7000 isolating spacers (see section 4.3.2).

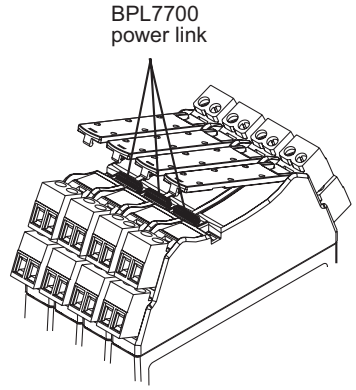

Figure 13: Power link insallation

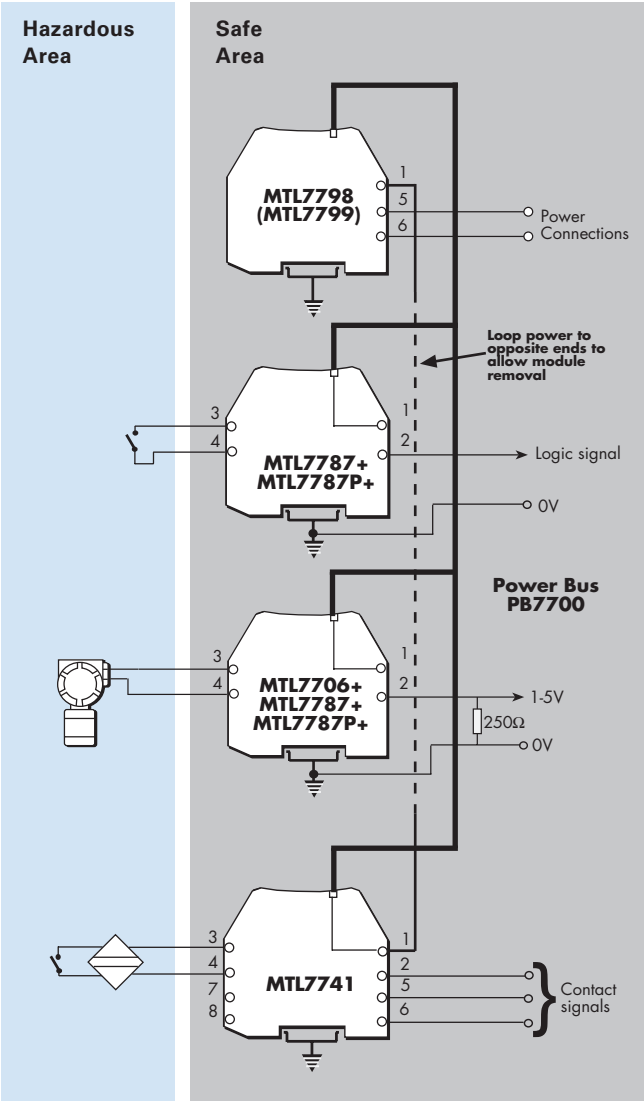

Figure 14: Typical application of the Power Bus

5.3.2 Earthing an installation

See figure 15. Connections from the DIN-rail to a suitable plant earth are made from ETL7000 earth terminals. These clip onto the DIN-rail as described in section 4.3.3 to make the vital earth connection with the rail and the barriers. They are provided with two screw-clamp terminals, to one of which a copper conductor to plant earth should be connected. This should have a resistance no greater than 1Ω though to increase safety and reduce interference, a resistance as close to 0.1Ω as possible is preferable. The cross-sectional area of the conductor should be as least 4mm^2 (12 AWG).

It is advisable to mount one ETL7000 earth terminal at each end of a column of barriers to provide redundancy by connecting both ETL7000 terminals to the plant earth. This makes it possible to introduce a multimeter into one of the loops to measure loop resistance without breaking the earth connection (figure 16) – a test which should be done periodically. In these circumstances, resistance for each cable loop should not exceed 2Ω.

The IS plant earth conductors should be clearly identified to warn against unauthorised interference. Though not mandatory, it is recommended that this should be done by winding blue insulating tape round the conductors at intervals along their length.

WARNING

Do not use earth foot terminal as an IS earth termination. Make IS earth connections using an ETL7000 earth terminal as described in section 5.3.2.

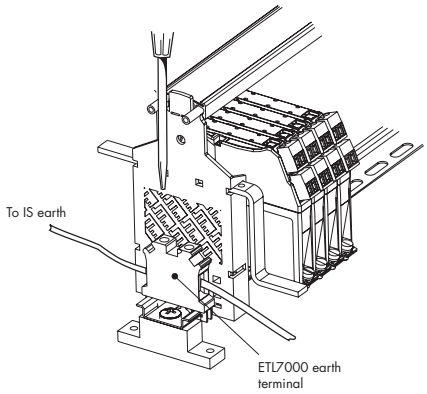

Figure 15: Plant earth connection to ETL7000 earth terminal

5.3.3 Earthing an earth rail assembly

On installations which include earth rail assemblies (see section 4.3.4) an earth conductor, normally copper wire with a cross-sectional area of at least 4mm^2 (12AWG) must be connected between ETM7 earth terminals located at each end of the rail and the 'spare' terminals on the ETL7000 terminals at each end of the column of barriers. See figure 17.

5.3.4 Hazardous-area equipment isolation

Hazardous-area equipment and interconnections should be isolated from earth sufficiently to be capable of withstanding a 500V isolation test. Such tests can, however, only be undertaken when the area is gas free so it is fortunate that most circuits can be tested at low voltages. To do this:

a) Disconnect from the barrier any cable connected directly to earth or returned through a barrier with a nominal voltage of less than 10V.

b) Check the resistance to earth of the safe-area terminals with a multimeter; it should be greater than 100kΩ.

Note: *some hazardous-area equipment (eg, pH and conductivity instrumentation) is unable to withstand this insulation test. As an alternative, in these circumstances the system can comply with the installation requirements described in IS sketch 121. See also 12.2.4.in BS EN 60079-14.*

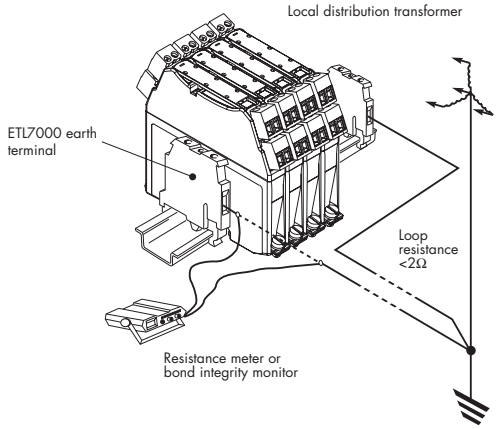

Figure 16: Earthing an installation with two conductors and providing resistance test facilities

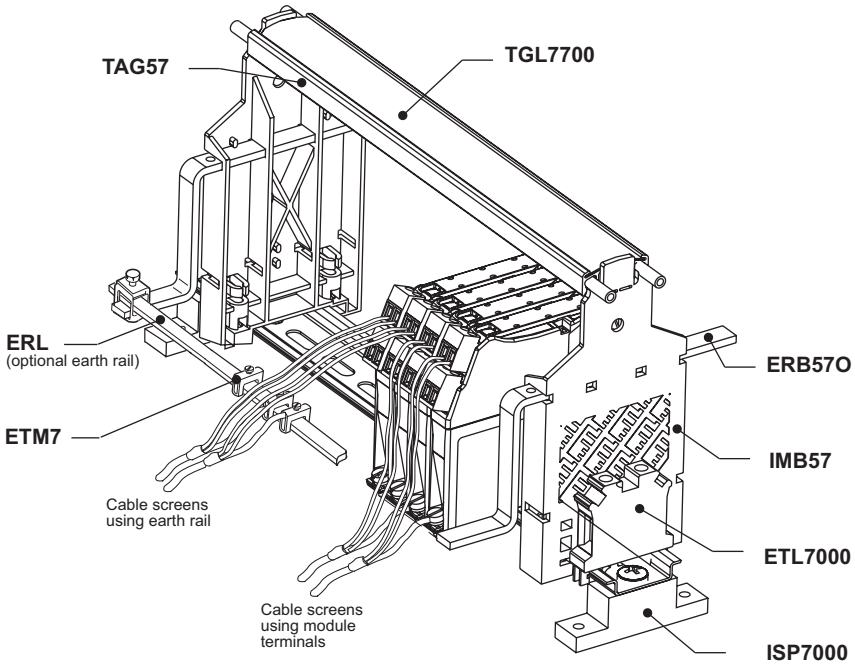

Figure 17: Earthing and screening using module earth terminals or earth rail alternative

5.3.5 Bonding practice when hazardous-area equipment cannot meet prescribed insulation standards

Where hazardous-area equipment is connected to earth (either directly or indirectly) and/or it will not withstand a 500V insulation test to ground or the alternative described in section 5.3.4, eg, strain-gauge bridges with low-voltage insulation, pH and conductivity sensors, bare and/or earthed thermocouples, and some level detectors, the following considerations apply:

Safety considerations

a) The pipe, vessel, or body of the hazardous-area apparatus and/or the adjacent metallic structure must be connected to the barrier DIN-rail (see item d) by a bonding conductor of at least 4mm^2 cross-sectional area for lengths of 100m or less; or at least 8mm^2 area for lengths between 100m and 200m.

b) Where bonding conductors are used, care must be taken to avoid invading other intrinsically safe systems (those not using bonding conductors) by elevation arising from currents which may flow in the common earthing systems as a result of the presence of the bonding conductor. Where this possibility cannot be avoided, then barriers associated with bonded systems should be mounted on a separate DIN-rail from those on which other barriers are mounted. Additionally, the DIN-rails themselves should also be earthed separately.

c) The hazardous-area equipment and/or adjacent metallic structure bond connections must be secured against vibration and corrosion. A terminal of the type used on 'increased safety' ('e') equipment is the mandatory solution.

d) The barrier DIN-rail connections must provide suitable termination facilities for the bonding conductor and usual 'earth return' by being equipped with separate increased safety ('e') terminals.

Operational requirements

e) Figure 18 shows the 0V rail of the safe-area equipment returned to the barrier DIN-rail by a separate insulated conductor and the structural earths of any safe-area equipment returned separately to the neutral star-point. This reduces interference problems but is not essential for safety reasons.

f) In general, the use of barriers in all measurement leads reduces the possibility of earth circulating currents causing measurement problems.

g) Resistance from the neutral star point to 'terrestrial earth' – via the buried earth mat or rods – is determined by other regulations and is not modified or determined by the intrinsic safety requirements, which are concerned with the plant earth only.

5.4 Connections to dummy barriers

See figure 19. The MTL7799 dummy barriers provide safe connection facilities for unused cable cores, cable screens and 0V returns. In addition, safe-area terminals 2 and 1 are connected internally to provide a straight 'feedthrough' 24V dc supply connection, enabling the units to be used as feed modules for use with a power bus, useful in applications where the fault trip mechanism of the MTL7798 is not needed.

6 MAINTENANCE

6.1 General

Circuits in all MTL7700 range of barriers are encapsulated and so cannot be repaired. However, provided they are correctly installed and connected (as described in sections 4 and 5 of this manual) and the circuits they protect are not themselves defective, barrier faults are highly unlikely to occur. Therefore, servicing of barrier installations consists mainly of routine inspection and earth testing as described in this section.

More information about the maintenance of barrier installations is given in BS EN 60079 -17.

6.2 Routine inspection

At intervals not exceeding two years (more frequently for harsh environments), make a visual check of the barrier installation. Personnel undertaking these checks should comply with all regulations relating to the safety of plant and personnel. Care must be taken to prevent any inadvertent direct connection between hazardous- and safe-area circuits and, at all times, the safety precautions discussed in section 3 MUST be observed.

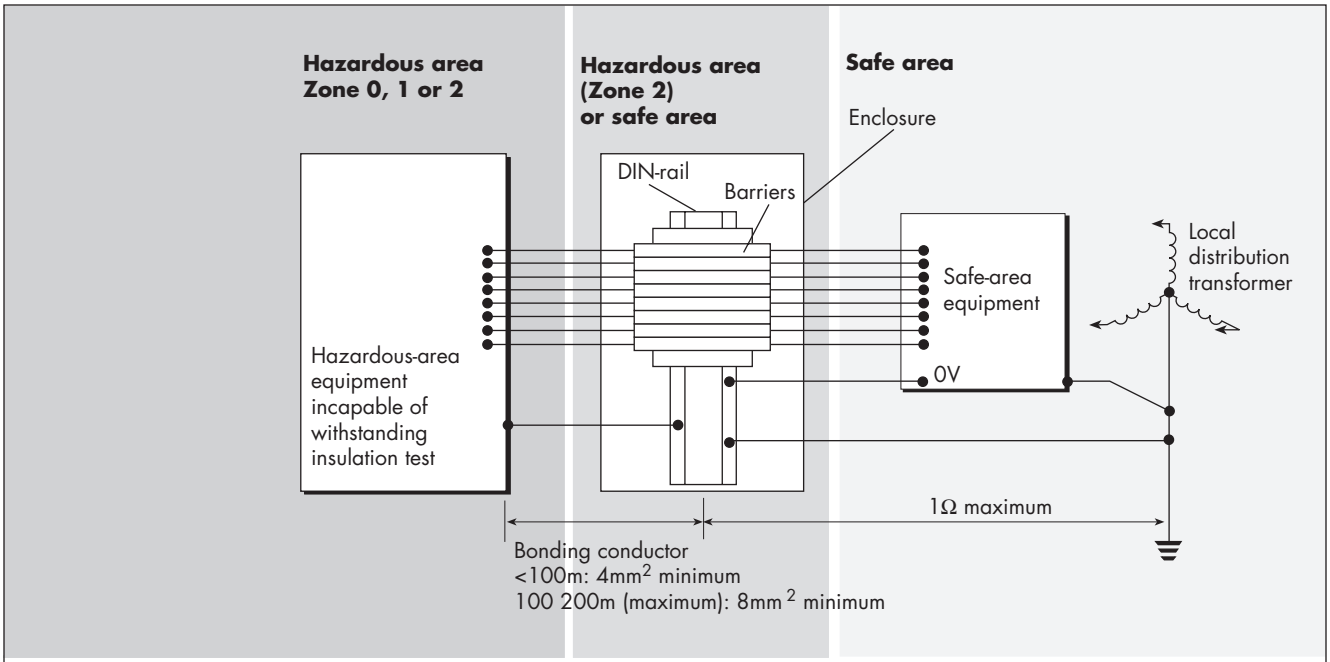

Figure 18: Bonding practice where hazardous-area equipment cannot meet required standards of insulation from earth

Check that:

a) Barriers are of the types and polarities specified in the safety documentation.

b) The barriers are attached securely and correctly to the DIN-rail to make sure the earth connection is safe.

c) There are no apparent signs of damage or corrosion to the barriers, the ETL7000 earth terminals, the plant earth connections, and, if fitted, any earth rail assemblies.

d) All hazardous-area and safe-area cable connections are made correctly and the terminals properly tightened.

e) Interconnecting cables are of the type and rating specified by the safety documentation and that they are not frayed or otherwise damaged.

f) All earth returns and cable screens from the hazardous area are connected to earth either through a barrier, a dummy barrier or an earth rail.

g) Visually examine the earth conductors and make sure they are not damaged in any way and that their terminations are secure and free from corrosion.

h) Using a low-voltage low-current test meter (ie, a meter with an output not exceeding 3V and 50mA), measure the resistance between the DIN-rail and the neutral star-point of the supply and make sure it does not exceed 1Ω. Record the reading and compare it with readings taken during previous inspections. A consistent reading repeated over a long period of time is a reassuring sign indicating a sound earth return which is likely to remain so. If two earth conductors are used as described in section 5.3.2, the loop resistance should be measured as described in that section and the reading should not be greater than 2Ω.

WARNING:

Do not try to carry out a high-current earth resistance test unless it is confirmed by the authority in charge of the plant that the plant is gas-free.

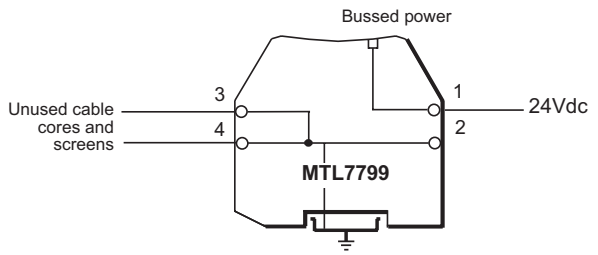

Figure 19: MTL7799 dummy barrier connections

7 FAULT-FINDING

7.1 Introduction

Most barrier-protected systems are relatively simple and their operation is easy to check. However, when fault finding is necessary, it must only be undertaken after checking with plant personnel responsible for safety that it is safe to proceed.

The fault-finding procedures described in this section call for the use of a digital multimeter – this being the most common type used. However, other types can be used provided their characteristics when measuring silicon diodes are known.

Many digital multimeters include a diode test function which is useful when diode chains are included in the test. These usually operate by passing 1mA through the diode and measuring the voltage across it. When measuring more than two diode drops in series, note that the full-scale range of some multimeters is only 2V on the diode test range. With three or more diode drops it is therefore possible that the meter may indicate over-range. In the test tables (tables 4 to 10), section 8, any drop of more than 4V is indicated as infinity (∞).

Zener diodes and ordinary silicon diodes have a typical forward voltage drop of approximately 0.6V/diode. Diode return paths with Schottky diodes have a typical voltage drop of <0.3V for each diode in the chain, eg, MTL7787+, 7787P+.

Figure 20 depicts a typical switch-status transfer circuit protected by an MTL7787+ barrier which illustrates some of the fault-finding techniques discussed in this section. To determine the serviceability of MTL7700 range of barriers, follow the steps described in sections 7.2 to 7.3.

7.2 Power supply check

Check that the power supply to an individual barrier circuit (or to an MTL7798 power feed module or an MTL7799 dummy barrier sourcing the power bus) is functional and that the voltage across the supply with respect to earth is correct. For example, in Figure 20 the presence of 24V on terminal 1 and 12V on terminal 2 when the switch in the hazardous area is closed confirms the serviceability of almost the complete circuit.

7.3 Barrier resistance test

To test the resistance of a barrier on site, refer to figure 20 and carry out the following procedure:

a) Unplug hazardous-area cables from terminals 3 and 4.

b) Unplug safe-area cables from terminals 1 and 2.

WARNING: Take care when handling safe-area cables; the relay contacts in figure 20 for example could be carrying mains voltage.

c) Measure the end-to-end resistance of the barrier by connecting a digital multimeter (set to a suitable Ω range) between terminals 1 and 3. The reading should typically be slightly less (eg 1–3% lower) than the maximum end-to-end resistance listed in tables 4 to 10 for the appropriate barrier type or approximately 10–20% higher than the figure specified in the safety description.

d) Check the functioning of the diode-return channel (MTL7787+, 7787P+, only) by selecting the diode test function on the multimeter and connecting it between terminals 4 (+ve) and 2 (–ve). This measures the forward voltage drop of the Schottky diodes in the chain: the reading should be less than 0.9V. Repeat the test with the connections reversed (ie, terminals 4 (–ve) and 2 (+ve) for an expected reading of ∞ for the reverse voltage drop.

e) Tests c) and d) confirm the continuity of both barrier channels. If either channel is open-circuit it is most likely that the fuse has blown. The safe-area circuit should be investigated in an attempt to discover the cause of the fault.

Note: *if the barrier is removed, make sure the safe-area and hazardous-area cables disconnected during operations **a)** and **b)** are connected to an earth-rail, a dummy barrier or insulated completely.*

c) If it is not possible to disconnect wiring to the barrier for steps a) and b), carry out the tests given in table 4.

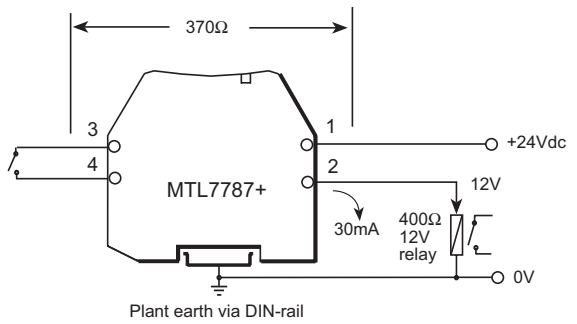

Figure 20: Switch-status transfer circuit using an MTL7787 barrier

8 EQUIPMENT AND BARRIER TESTS

8.1 Thermocouple and RTD tests

8.1.1 Thermocouple circuit testing

Thermocouple test and calibration equipment is rarely certified intrinsically safe and therefore requires special authorisation before it can be used for testing or calibrating thermocouple circuits in hazardous areas. To overcome this problem, the thermocouple circuits can be protected by using an MTL7760ac barrier as shown in figure 21. This permits the thermocouple output to be measured without needing special authorisation to use uncertified thermocouple test equipment.

As it is seldom possible to measure accurately the temperatures of thermocouples located in hazardous areas, a safe way of adjusting calibration tables to compensate for plant temperatures is needed. This can be done by disconnecting the compensating cables from the thermocouple, shorting them together, and measuring the temperature of the shorting point.

8.1.2 Resistance temperature detector (RTD) circuit testing

Resistance temperature detector (RTD) circuits can be tested by disconnecting the measuring leads from the RTD head in the hazardous area and connecting them to a resistance box. Sometimes it is more convenient to connect the resistance box in the safe area, for instance at point 'xx' in figure 22. For the latter method, however, the RTD must be shorted out or an allowance made for its temperature. The effect of a negative temperature change can be simulated by connecting the resistance box into the measurement lead at point 'yy'. The advantage of connecting the resistance box at the RTD head is that any leakage can also be determined by connecting the resistance box at point 'yy'.

8.2 Barrier tests

8.2.1 General

MTL7700 range of barriers do not need to be subjected to routine testing if they are in normal use. Generally, the inspection tests described in section 6 are more than adequate. However, if the performance of barriers is in any way suspect, then carry out the detailed tests described in this section. Barriers which pass these tests satisfactorily are highly unlikely to represent an unacceptable level of risk or cause a circuit malfunction.

There are two types of test (as shown by tables 4 to 10); a simple test using a digital multimeter to test barriers on site and a more comprehensive bench test using a constant current source to establish the breakdown characteristics.

Although certification requirements concentrate on pulse-current tests, in many ways the leakage current tests described in this section are a more satisfactory method of testing suspect diodes. If a complete functional check of a barrier is needed, then the multimeter and constant current tests described in sections 8.2.2 and 8.2.3 should be made although, for most purposes, the multimeter tests should suffice.

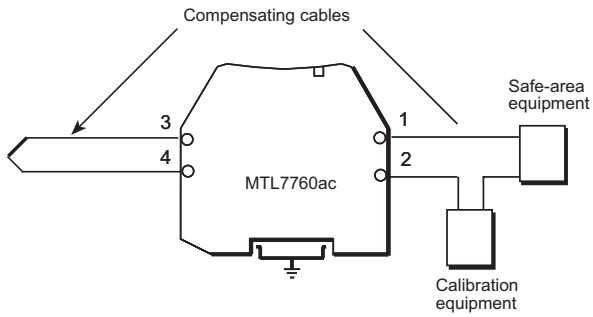

Figure 21: Calibrating a thermocouple barrier circuit

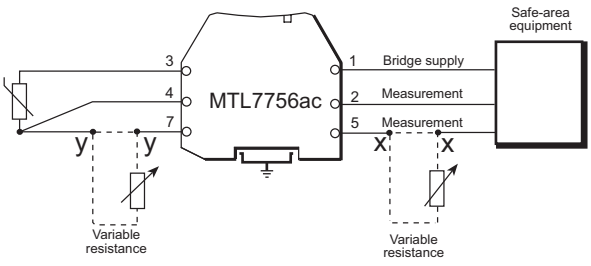

Figure 22: Calibrating an RTD barrier circuit

8.2.2 Multimeter tests

See tables 4 to 10. The use of a digital multimeter for testing barriers is described in section 7. The tables assume that the multimeter is set to a suitable Ω range for the end-to-end resistance tests (except for diode return channels) and for the continuity tests; and that the multimeter diode test function is used for the diode tests, channel isolation tests and for the end-to-end resistance tests for diode return channels.

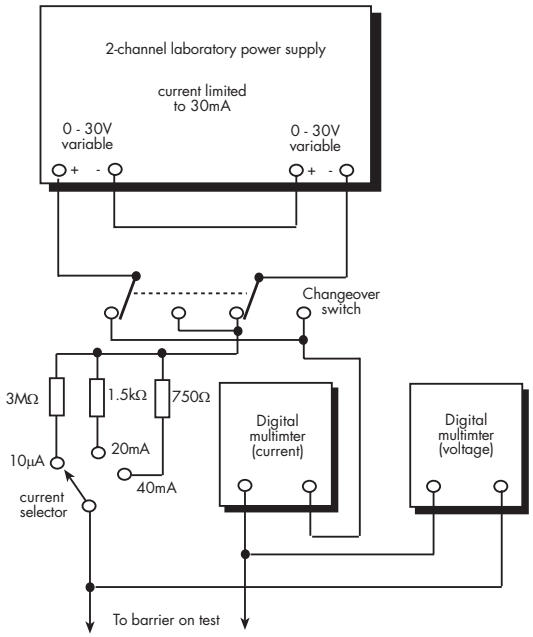

Figure 23: Constant-current test circuit using a power supply and digital multimeters

8.2.3 Constant-current tests

For these tests (last column of tables 4 to 10) a constant-current generator capable of supplying 10µA, 20mA and 40mA currents from a 30V source is needed. Ideally, a purpose-built current generator should be used but, alternatively, a set-up based on a laboratory power supply and two multimeters (figure 23) will serve. The current is measured by one multimeter and trimmed by adjusting the output voltage of the power supply indicated on the second multimeter.

When using a constant-current generator for testing MTL7700 range of barriers, note the following points:

a) The current must be limited to 50mA to avoid damaging the barriers.

b) The accuracy of the current is not critical and can vary by ±5%.

c) Test leads must be connected securely to the barrier terminals; however, the changeover switch and current selector reduce the need for connection changes.

d) Using a high resistance in series with the barrier gives more stable results and makes it easier to set the required current.

8.3 Tests for Active Barriers

8.3.1 Tests for the MTL7706+

Comprehensive testing requires specialised equipment, beyond the scope of on-site tests. However, an effective test which will confirm that the unit is operating correctly is shown in figure 24. Ammeter 1 measures the transmitter simulator current of between 4 and 20mA flowing from terminal 4 and the safe-area load current flowing to terminal 4 simultaneously. Since these two currents are equal and opposite, the resulting reading on the ammeter should be virtually zero. Ammeter 2 verifies the presence of the 4–20mA transmitter signal.

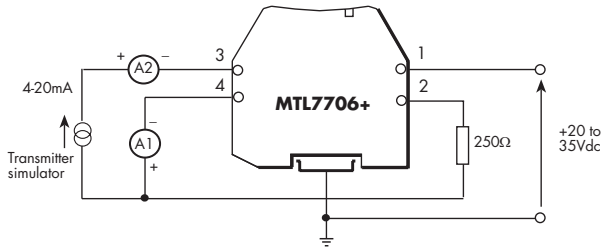

Figure 24: MTL7706+ test circuit

8.3.2 Tests for the MTL7707+

Since this unit incorporates a built-in protection circuit, it has to be tested in a different manner to an ordinary shunt-diode barrier. Referring to figure 25, set the transmitter simulator to 4mA and to 20mA, and check that the ammeter reads approximately the same value. Then, having set the simulator to 20mA, check that the voltage between terminals 1 and 3 is less than 8.5V and between terminals 2 and 4 is less than 1.6V.

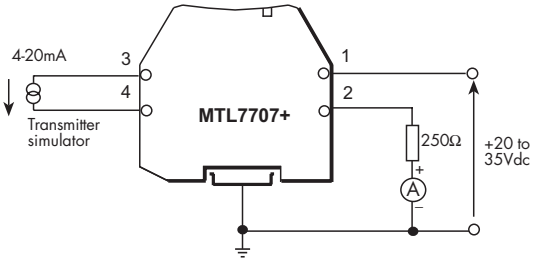

Figure 25: MTL7707+ test circuit

8.3.3 Tests for MTL774x

The MTL774x range are switch/prox input barriers with a choice of changeover relay contacts or a solid state switch acting as the safe area interface. Relay contacts provide a universal interface capable of switching a wide range of signals including ac, low level and high level voltages. Phase reversal is achieved by connecting the normally open or normally closed contacts as required. The solid state switch variants can be configured to switch from a power rail or down to ground and makes these barriers ideal for high switching frequency applications.

When testing bus powered barriers use either an MTL7798 Power Feed module or an MTL7799 dummy barrier for direct 'feed-through' connection of a 24V dc supply.

8.3.3.1 Testing MTL7741 Barriers

The MTL7741 is a single channel switch/prox input barrier with changeover relay contacts acting as the safe area interface. To verify correct operation proceed as follows:

a) Connect the barrier as shown in figure 26.

b) With an ohmeter, check that the output contacts (terminal 5 & 6) close when the input switch is closed.

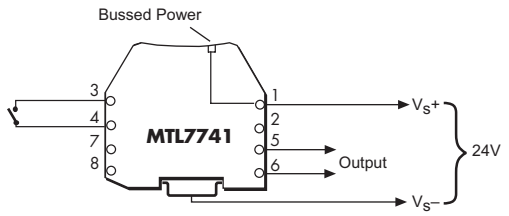

Figure 26: Test circuit for MTL7741

8.3.3.2 Testing MTL7742 Barriers

The MTL7742 is a single channel switch/prox input barrier with an open collector solid state interface to the safe area equipment. To verify correct operation proceed as follows:

a) Connect the barrier as shown in figure 27.

b) Check that the LED is on when the input switch is closed, and off when the input switch is open.

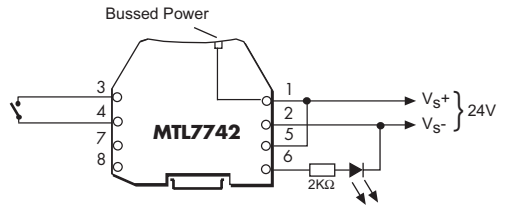

Figure 27: Test circuit for MTL7742

8.3.3.3 Testing MTL7743 Barriers

The MTL7743 is a dual channel switch/prox input barrier, each channel with a relay interface to the safe area equipment. To verify correct operation proceed as follows:

a) Connect the barrier as shown in figure 28.

b) With an ohmeter, check that the output contacts (terminal 1 & 2) close when the input switch for channel 1 is closed.

c) Repeat the procedure for channel 2.

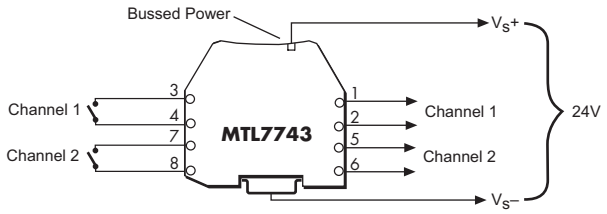

Figure 28: Test circuit for MTL7743

8.3.3.4 Testing MTL7744 Barriers

A dual channel version of the MTL7742, this module provides two solid state interfaces for prox/switch inputs. To verify correct operation proceed as follows:

a) Connect the barrier as shown in figure 29.

b) Connect power via the power bus

c) Check that the LED is on when the input switch is closed for channel 1, and off when the input switch is open for channel 1.

d) Repeat the procedure for channel 2.

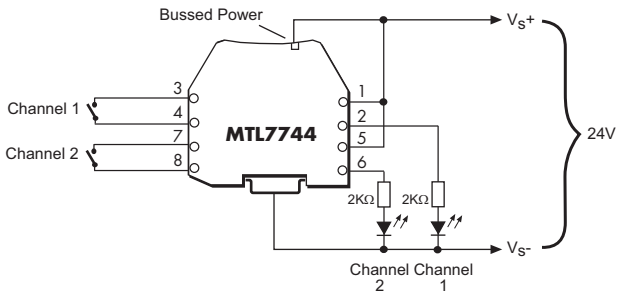

Figure 29: Test circuit for MTL7744

8.3.3.5 Testing MTL7745 Barriers

This module is a single channel interface for prox/switch inputs with line fault detection. To verify correct operation proceed as follows:

a) Connect the barrier as shown in figure 30.

b) With an ohmeter, check the status of the output contacts according to Table 3

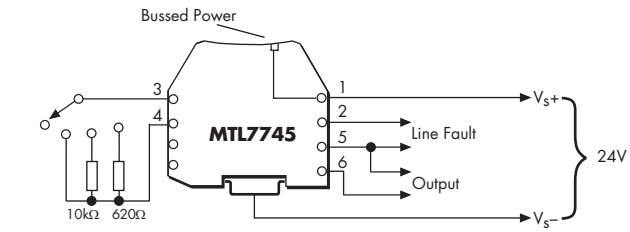

Figure 30: Test circuit for MTL7745

Input	Output	Line Fault
Open circuit	Open	Closed
Short circuit	Closed	Closed
620Ω	Closed	Open
10KΩ	Open	Open

Table 3 Test conditions for MTL7745

8.4 Test tables for passive barriers

Tables 4 to 10 detail the tests for all MTL7700 range of 'passive' barriers. In the 'diode test' columns, the figures adjacent to the diode description indicate the number of forward-biased diodes used in the barrier chain. Using the multimeter diode test function and knowing the diode voltage drop figures (approximately 0.6V for each Zener diode and 0.3V for each Schottky diode), the expected reading across the diode chain can be determined.

BARRIER DATA				MULTIMETER TESTS				CONSTANT-CURRENT TESTS			
Model No.	Safety Description			End-to-end Resistance Ω		Diode Test +ve	Diode Test -ve	Terminal Voltage @ 10µA		Terminal Voltage @ 20mA	
	V	Ω	mA	Min	Max			Min	Max	Min	Max
7710+	10	50	200	62	75	∞	Vf_z x 1	6	9.5	6.6	9.7
7710-	10	50	200	62	75	∞	Vf_z x 1	6	9.5	6.6	9.7
7710P+	10	33	300	37	41	∞	Vf_z x 1	7.9	9.88	7.9	9.89
7715+	15	100	150	110	119	∞	Vf_z x 1	12	13.6	12.4	13.7
7715P+	15	50	291	59	64	∞	Vf_z x 1	12.6	13.3	13	13.4
7722+	22	150	147	159	174	∞	Vf_z x 2	19.6	20.9	19.7	21.1
7722-	22	150	147	159	174	∞	Vf_z x 2	19.6	20.9	19.7	21.1
7728+	28	300	93	311	333	∞	Vf_z x 2	25.9	26.5	26	26.7
7728-	28	300	93	311	333	Vf_z x 2	∞	25.9	26.5	26	26.7
7728P+	28	237	119	241	252	∞	Vf_z x 3	24.9	25.5	25	25.6
7729P+	28	164	170	171	184	∞	Vf_z x 3	24.9	25.5	25	25.6

Table 4: Single channel polarised barriers

BARRIER DATA				MULTIMETER TESTS				CONSTANT-CURRENT TESTS			
Model No.	Safety Description			End-to-end Resistance Ω		Diode Test +ve	Diode Test -ve	Terminal Voltage @ 10µA		Terminal Voltage @ 20mA	
	V	Ω	mA	Min	Max			Min	Max	Min	Max
7758+	7.5	10	750	14	17	∞	Vf_z x 1	6	6.9	6.6	7
7758-	7.5	10	750	14	17	∞	Vf_z x 1	6	6.9	6.6	7
7764+	12	1k	12	1010	1050	∞	Vf_z x 1	10	11.4	10.5	11.6
7764-	12	1k	12	1010	1050	∞	Vf_z x 1	10	11.4	10.5	11.6
7767+	15	100	150	110	119	∞	Vf_z x 1	12	13.6	12.4	13.7
7768+	22	150	147	185	198	∞	Vf_z x 2	17.7	21.5	17.7	21.5
7768+ (ch2)	22	150	147	185	198	∞	Vf_z x 2	17.7	21.5	17.7	21.5
7779+	28	300	93	311	333	∞	Vf_z x 2	25.9	26.3	26	26.5
7796+	26	300	87	311	333	∞	Vf_z x 2	23.9	24.4	24	24.6
7796+ (ch2)	20	390	51	401	428	∞	Vf_z x 2	18.3	18.8	18.4	19
7796-	26	300	87	311	333	Vf_z x 2	∞	23.9	24.4	24	24.6
7796- (ch2)	20	390	51	401	428	Vf_z x 2	∞	18.3	18.8	18.4	19
7788+	28	300	93	311	333	∞	Vf_z x 2	25.9	26.4	26	26.6
7788+ (ch2)	10	50	200	62	75	∞	Vf_z x 1	6	9.5	6.6	9.7
7788R+	28	300	93	311	333	∞	Vf_z x 2	25.9	26.4	26	26.6
7788R+ (ch2)	10	50	200	62	75	V_r	V_r	0	0	6.2	6.8

Table 5: Dual channel polarised barriers

Note: *Vf_z is the voltage dropped by a forward biased zener diode - 0.6V typically*
V_r is the voltage dropped by the sense and current limit resistors - 3.2V for a typical 1mA test current

BARRIER DATA				MULTIMETER TESTS				CONSTANT-CURRENT TESTS			
Model No.	Safety Description			End-to-end Resistance Ω		Diode Test +ve	Diode Test -ve	Terminal Voltage @ 10µA		Terminal Voltage @ 20mA	
	V	Ω	mA	Min	Max			Min	Max	Min	Max
7728ac	28	300	93	311	333	∞	∞	25	26.7	25.6	8.9
7772ac	22	300	73	309	332	∞	∞	17.3	21.54	17.3	21.55

Table 6: Single channel

BARRIER DATA				MULTIMETER TESTS				CONSTANT-CURRENT TESTS			
Model No.	Safety Description			End-to-end Resistance Ω		Diode Test +ve	Diode Test -ve	Terminal Voltage @ 10µA		Terminal Voltage @ 20mA	
	V	Ω	mA	Min	Max			Min	Max	Min	Max
7761ac	9	90	100	98	107	∞	∞	6	8.6	6.9	8.9
7761Pac	9	350	26	361	378	∞	∞	6.8	8.6	7.7	8.9
7764ac	12	1k	12	1010	1050	∞	∞	10	11.6	10.8	11.9
7766ac	12	150	80	159	174	∞	∞	10	11.6	10.8	11.9
7766Pac	12	75	157	84	92	∞	∞	9.6	10.9	10.4	11.2

Table 7: Dual-channel ac barriers

BARRIER DATA				MULTIMETER TESTS				CONSTANT-CURRENT TESTS			
Model No.	Safety Description			End-to-end Resistance Ω		Diode Test +ve	Diode Test -ve	Terminal Voltage @ 10µA		Terminal Voltage @ 20mA	
	V	Ω	mA	Min	Max			Min	Max	Min	Max
7751ac	1	10	100	15	18	Vf_d x 1	Vf_d x 1	0.3	0.8	0.3	0.8
7755ac	3	10	300	15	19	Vf_d x 3	Vf_d x 3	1	2.1	1.8	2.4
7756ac	3	10	300	15	19	Vf_d x 2	Vf_d x 2	0.7	1.4	1.2	1.6

Table 8: 2/3 channel low voltage ac barriers

BARRIER DATA				MULTIMETER TESTS				CONSTANT-CURRENT TESTS			
Model No.	Safety Description			End-to-end Resistance Ω		Diode Test +ve	Diode Test -ve	Terminal Voltage @ 10µA		Terminal Voltage @ 20mA	
	V	Ω	mA	Min	Max			Min	Max	Min	Max
7760ac	10	50	200	62	75	∞	∞	6	9.5	6.9	9.8
7765ac	15	100	150	112	124	∞	∞	12	14.1	12.7	14.4
7778ac	28	600	47	614	651	∞	∞	24.0	24.4	25.4	26.0

Table 9: Dual-channel star-connected ac barriers

Note: *Vf_d is the voltage dropped by a forward biased rectifier diode - 0.6V typically*

BARRIER DATA				MULTIMETER TESTS				CONSTANT-CURRENT TESTS			
Model No.	Safety Description			End-to-end Resistance Ω		Diode Test +ve	Diode Test -ve	Terminal Voltage @ 10µA		Terminal Voltage @ 20mA	
	V	Ω	mA	Min	Max			Min	Max	Min	Max
7787+	28	300	93	311	333	∞	Vf_z x 2	26.6	27.4	26.7	27.6
7787+ (ch2)	28	—	—	∞ (+)	0.9V + 26	∞	Vf_z x 2	26.6	27.4	26.7	27.6
7787P+	28	237	119	241	253	∞	Vf_z x 3	26.4	27.4	26.5	27.6
7787P+ (ch2)	28	—	—	∞ (+)	0.9V + 26	∞	Vf_z x 2	26.6	27.4	26.7	27.6
7789+	38	300	93	614	651	∞	Vf_z x 2	26.6	27.4	26.7	27.6
7789+ (ch2)	28	—	—	∞ (+)	0.9V + 26	∞	Vf_z x 2	26.6	27.4	26.7	27.6

Table 10: Diode return barriers

Note: Vf_z is the voltage dropped by a forward biased zener diode- 0.6V typically

APPENDIX A: TYPICAL WIRING CONNECTIONS FOR SPECIFIC APPLICATIONS.

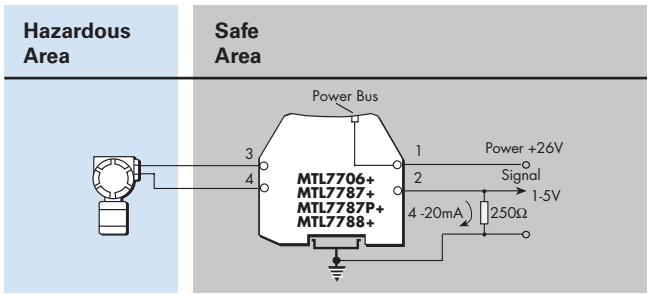

Figure A1: 2-wire transmitters

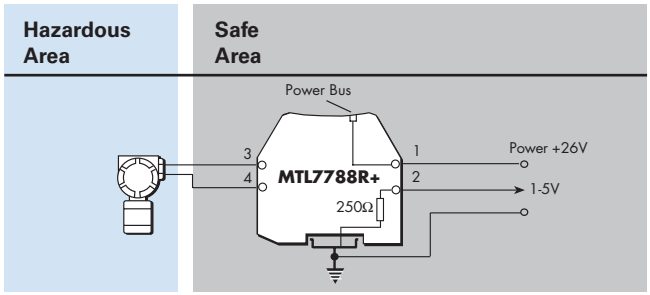

Figure A2: 2-wire transmitters with 250Ω conditioning

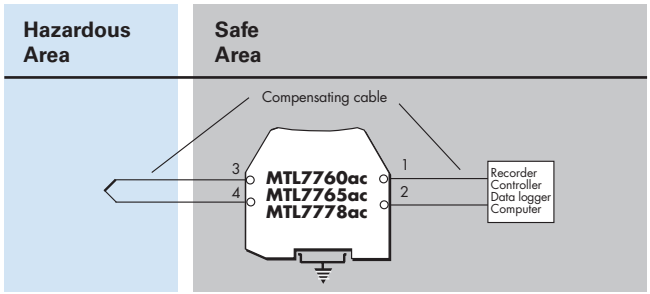

Figure A3: Thermocouple/mV input

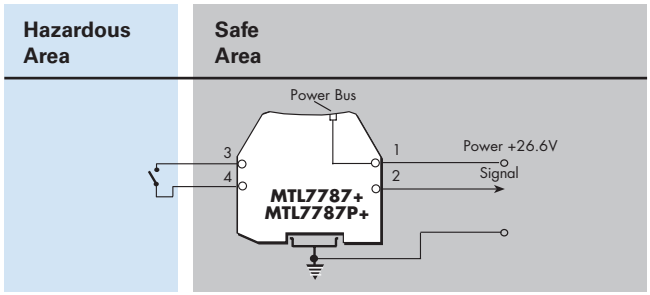

Figure A4: 2-wire transmitter/switch input

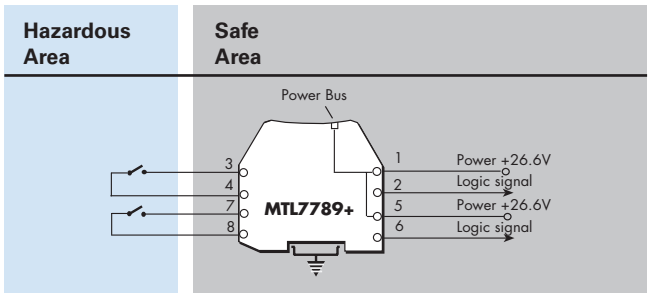

Figure A5: 2-channel switch inputs

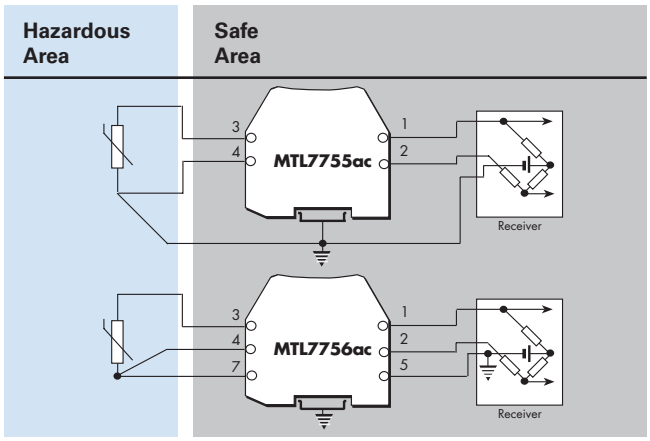

Figure A6: Low-level analogue inputs (RTD's)

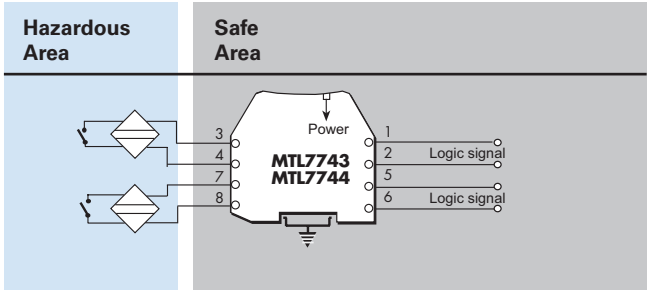

Figure A7: 2-channel switch/proximity input

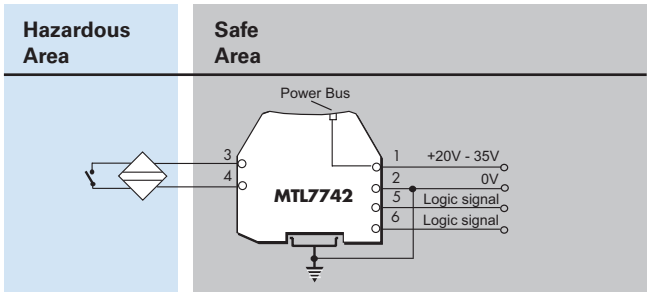

Figure A8: Single channel switch/proximity input

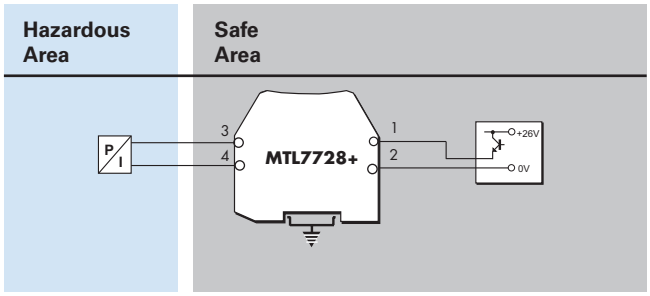

Figure A9: Analogue output

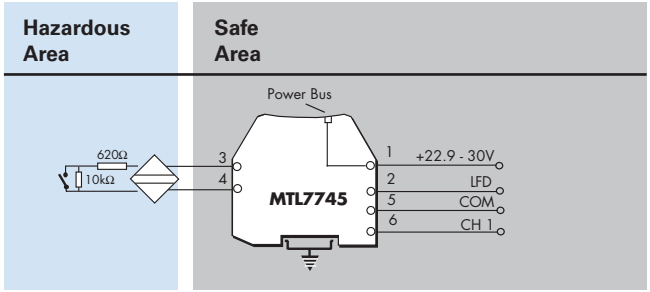

Figure A10: Single channel switch/proximity input with Line Fault Detect

Continued

APPENDIX A: continued

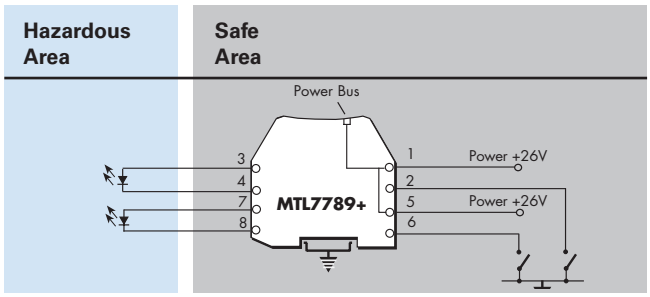

Figure A11: Low power digital outputs

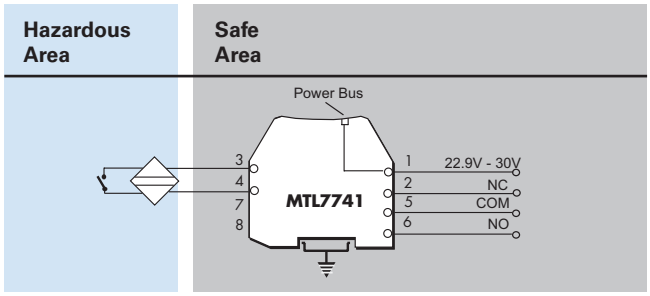

Figure A12: Single channel switch/proximity input with cutout relay

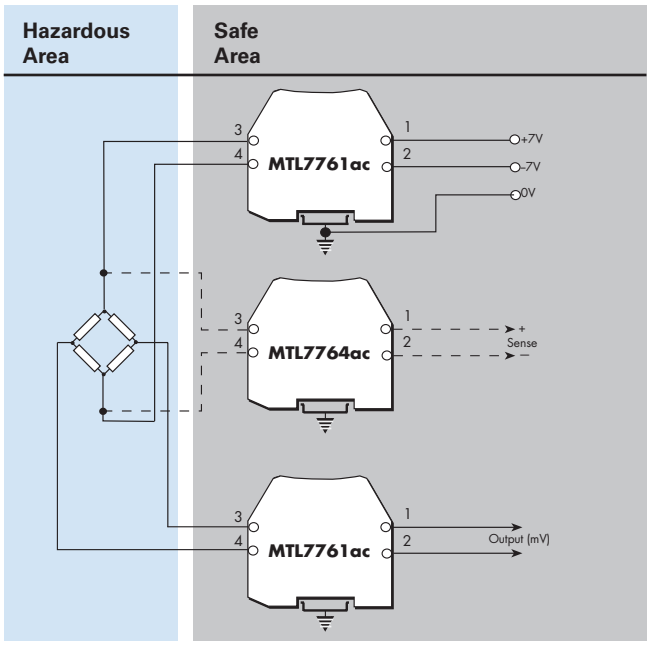

Figure A13: Strain-gauge bridges

APPENDIX B:

Table A - Safety descriptions

* Ta = 65°C † Terminals 3 and 7 connected together

Model No.	V	Ω	mA
MTL7706+	28	300	93
MTL7707+	28	300	93
	28	▶|	-
MTL7707P+	28	164	171
	28	▶|	-
MTL7710+/-	10	50	200
MTL7710P+	10	33	300
MTL7715+	15	100	150
MTL7715P+	15	50	291
MTL7722+/-	22	150	147
MTL7728+	28	300	93
MTL7728–	28	300	93
MTL7728ac	28	300	93
MTL7728P+	28	234	119
MTL7729P+	28	164	170
MTL774X	10	-	19
MTL7751ac	1	10	100
MTL7755ac	3	10	300*
	3	10	300*
MTL7756ac	3	10	300*
	3	10	300*
	3	10	300*
MTL7758+/–	7.5	10	750
	7.5	10	750
MTL7760ac	10	50	200
	10	50	200
MTL7761ac	9	90	100
	9	90	100
MTL7761Pac	9	350	26
	9	350	26
MTL7764+/-/ac	12	1000	12
	12	1000	12

Model No.	V	Ω	mA
MTL7765ac	15	100	150
	15	100	150
MTL7766ac	12	150	80
	12	150	80
MTL7766Pac	12	75	157
	12	75	157
MTL7767+	15	100	150
	15	100	150
MTL7768+	22	150	147
	22	150	147
MTL7772ac	22	300	73
MTL7778ac	28	600	47
	28	600	47
MTL7779+	28	300	93
	28	300	93
MTL7787+/–	28	300	93
	28	▶|	-
MTL7787P+	28	234	119
	28	▶|	-
MTL7788+	28	300	93
	10	50	200
MTL7788R+	28	300	93
	10	50	200
MTL7789+	28	300	93†
	28	▶|	-
	28	▶|	-
MTL7796+	26	300	87
	20	390	51
MTL7796–	26	300	87
	20	390	51

CABLE PARAMETERS

Please refer to the MTL7700 certificates for cable parameters
www.mtl-inst.com

ATEX certificate BAS01ATEX7212
For 7707P+ & 7729P+: BAS01ATEX7218
IECEx certificate IECExBAS04.0025
For 7741/2/3/4/5: IECExBAS04.0026
Factory Mutual certificate FM16US0708X

Certificates for other authorities also available, see website

CROUSE-HINDS
SERIES

AUSTRALIA
Eaton Electrical (Australia) Pty Ltd,
10 Kent Road, Mascot, New South Wales, 2020, Australia

Tel: +61 1300 308 374 Fax: +61 1300 308 463
E-mail: mtlsalesanz@eaton.com

BeNeLux
MTL Instruments BV
Ambacht 6, 5301 KW Zaltbommel
The Netherlands

Tel: +31 (0) 418 570290 Fax: +31 (0) 418 541044
E-mail: mtl.benelux@eaton.com

CHINA
Cooper Electric (Shanghai) Co. Ltd
955 Shengli Road, Heqing Industrial Park
Pudong New Area, Shanghai 201201

Tel: +86 21 2899 3817 Fax: +86 21 2899 3992
E-mail: mtl-cn@eaton.com

FRANCE
MTL Instruments sarl,
7 rue des Rosiéristes, 69410 Champagne au Mont d'Or
France

Tel: +33 (0)4 37 46 16 53 Fax: +33 (0)4 37 46 17 20
E-mail: mtlfrance@eaton.com

GERMANY
MTL Instruments GmbH,
Heinrich-Hertz-Str. 12, 50170 Kerpen, Germany

Tel: +49 (0)22 73 98 12- 0 Fax: +49 (0)22 73 98 12- 2 00
E-mail: csckerpen@eaton.com

INDIA
MTL India,
No.36, Nehru Street, Off Old Mahabalipuram Road
Sholinganallur, Chennai- 600 119, India

Tel: +91 (0) 44 24501660 /24501857 Fax: +91 (0) 44 24501463
E-mail: mtlindiasales@eaton.com

ITALY
MTL Italia srl,
Via San Bovio, 3, 20090 Segrate, Milano, Italy

Tel: +39 02 959501 Fax: +39 02 95950759
E-mail: chmninfo@eaton.com

JAPAN
Cooper Industries Japan K.K.
MT Building 3F, 2-7-5 Shiba Diamon, Minato-ku
Tokyo, Japan 102-0012

Tel: +81 (0)3 6430 3128 Fax:+81 (0)3 6430 3129
E-mail: mtl-jp@eaton.com

NORWAY
Norex AS
Fekjan 7c, Postboks 147,
N-1378 Nesbru, Norway

Tel: +47 66 77 43 80 Fax: +47 66 84 55 33
E-mail: info@norex.no

RUSSIA
Cooper Industries Russia LLC
Elektrozavodskaya Str 33
Building 4
Moscow 107076, Russia

Tel: +7 (495) 981 3770 Fax: +7 (495) 981 3771
E-mail: mtlrussia@eaton.com

SINGAPORE
Eaton Electric (Singapore) Pte Ltd
100G Pasir Panjang Road
Interlocal Centre
#07-08 Singapore 118523
#02-09 to #02-12 (Warehouse and Workshop)

Tel: +65 6 645 9888 ext 9864/9865
Fax: 65 6 645 9811
E-mail: sales.mtlsing@eaton.com

SOUTH KOREA
Cooper Crouse-Hinds Korea
7F. Parkland Building 237-11 Nonhyun-dong Gangnam-gu,
Seoul 135-546, South Korea.

Tel: +82 6380 4805 Fax: +82 6380 4839
E-mail: mtl-korea@eaton.com

UNITED ARAB EMIRATES
Cooper Industries/Eaton Corporation
Office 205/206, 2nd Floor SJ Towers, off. Old Airport Road,
Abu Dhabi, United Arab Emirates

Tel: +971 2 44 66 840 Fax: +971 2 44 66 841
E-mail: mtlgulf@eaton.com

UNITED KINGDOM
Eaton Electric Limited,
Great Marlings, Butterfield, Luton
Beds LU2 8DL

Tel: +44 (0)1582 723633 Fax: +44 (0)1582 422283
E-mail: mtlenquiry@eaton.com

AMERICAS
Cooper Crouse-Hinds MTL Inc.
3413 N. Sam Houston Parkway W.
Suite 200, Houston TX 77086, USA

Tel: +1 800-835-7075 Fax: +1 866-298-2468
E-mail: mtl-us-info@eaton.com

Powering Business Worldwide

Eaton Electric Limited,
Great Marlings, Butterfield, Luton
Beds, LU2 8DL, UK.
Tel: + 44 (0)1582 723633 Fax: + 44 (0)1582 422283
E-mail: mtlenquiry@eaton.com
www.mtl-inst.com

© 2018 Eaton
All Rights Reserved

Publication No. INM 7700 Rev 14 111018
October 2018

EUROPE (EMEA):
+44 (0)1582 723633
mtlenquiry@eaton.com

THE AMERICAS:
+1 800 835 7075
mtl-us-info@eaton.com

ASIA-PACIFIC:
+65 6 645 9888
sales.mtlsing@eaton.com

The given data is only intended as a product description and should not be regarded as a legal warranty of properties or guarantee. In the interest of further technical developments, we reserve the right to make design changes.